June 16, 1959 C. ROHULICH 2,891,240

THERMAL ALARM

Filed Oct. 28, 1954 4 Sheets-Sheet 1

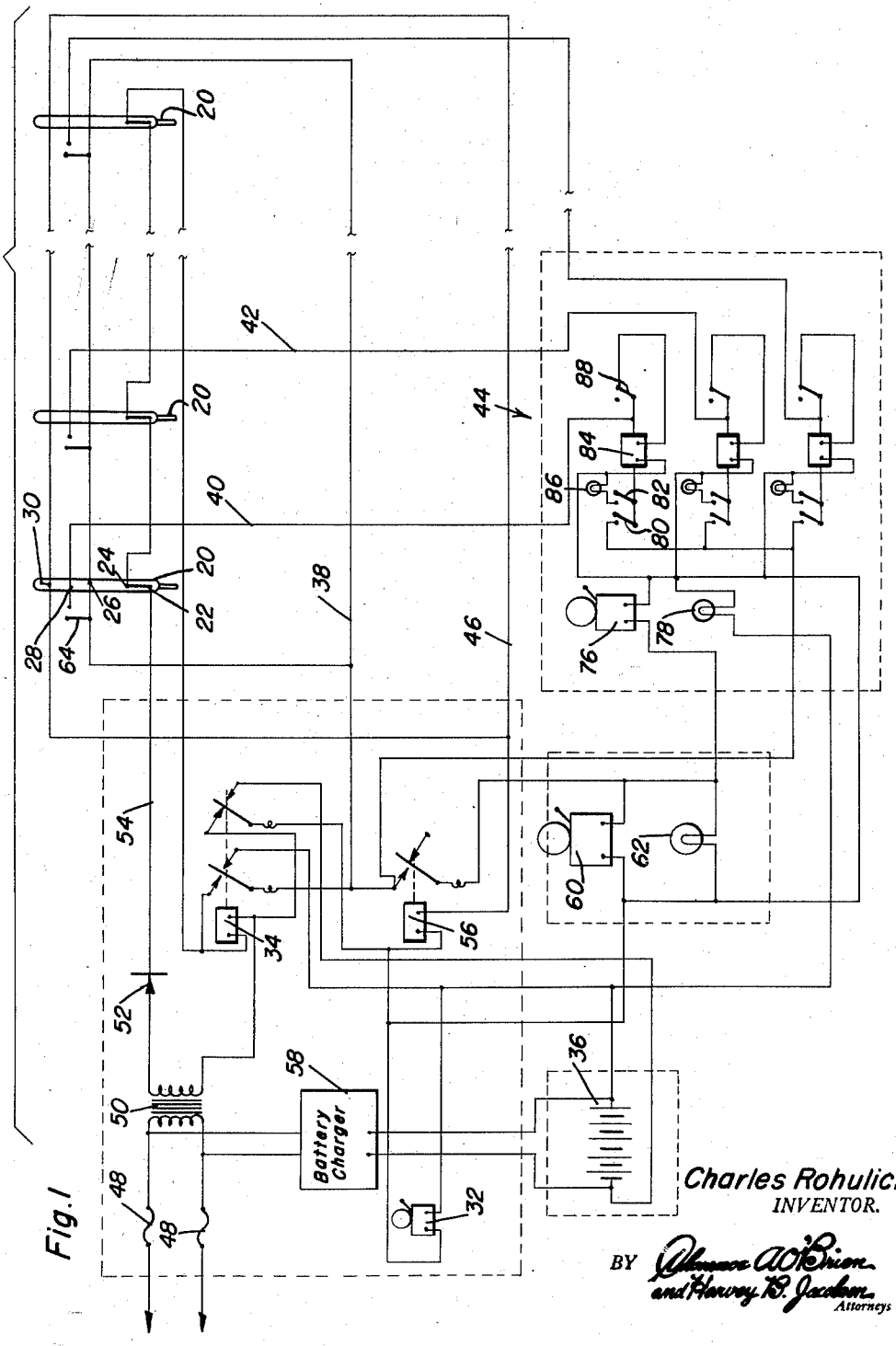

Fig. 1

Charles Rohulich
INVENTOR.

BY Clarence A. O'Brien and Harvey B. Jacobson
Attorneys

June 16, 1959 C. ROHULICH 2,891,240

THERMAL ALARM

Filed Oct. 28, 1954 4 Sheets-Sheet 2

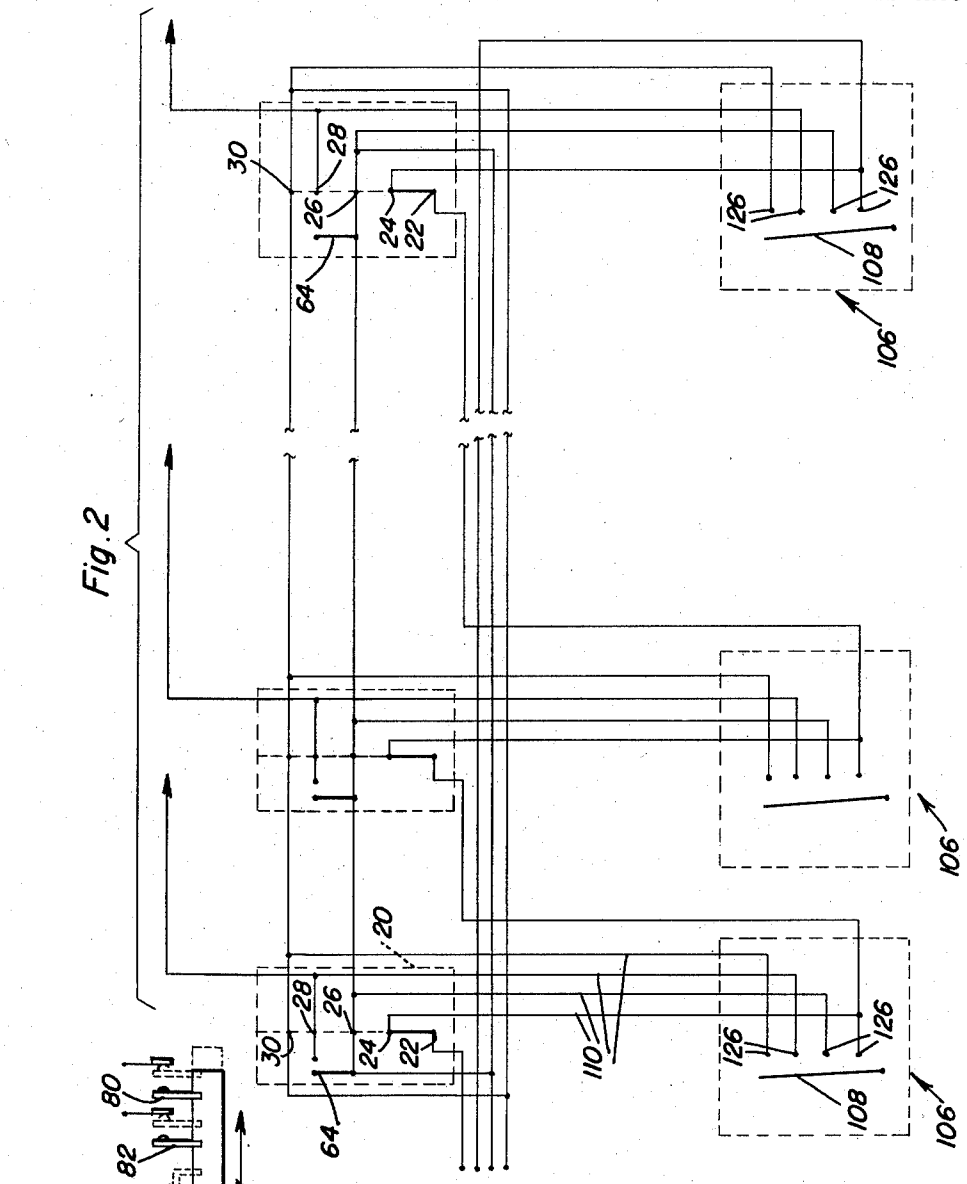

Fig. 2

Fig. 11

Charles Rohulich
INVENTOR.

BY Clarence A. O'Brien and Harvey B. Jacobson
Attorneys

June 16, 1959 C. ROHULICH 2,891,240

THERMAL ALARM

Filed Oct. 28, 1954 4 Sheets-Sheet 3

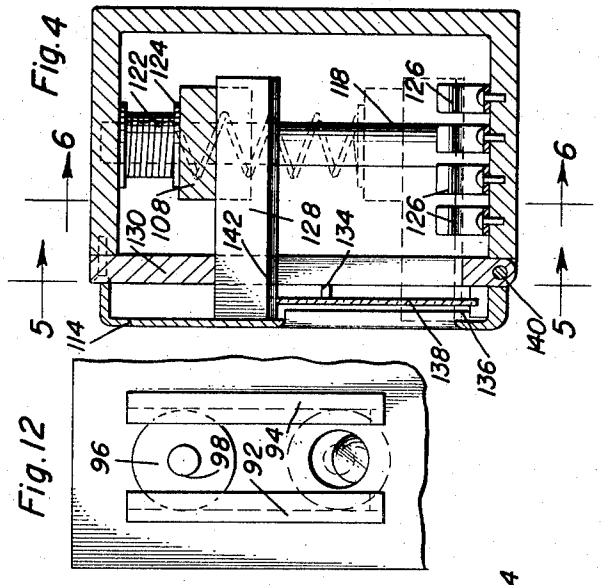

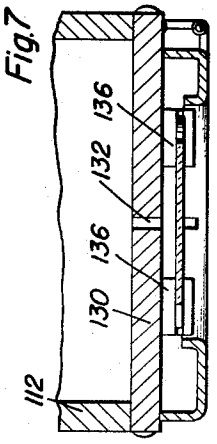

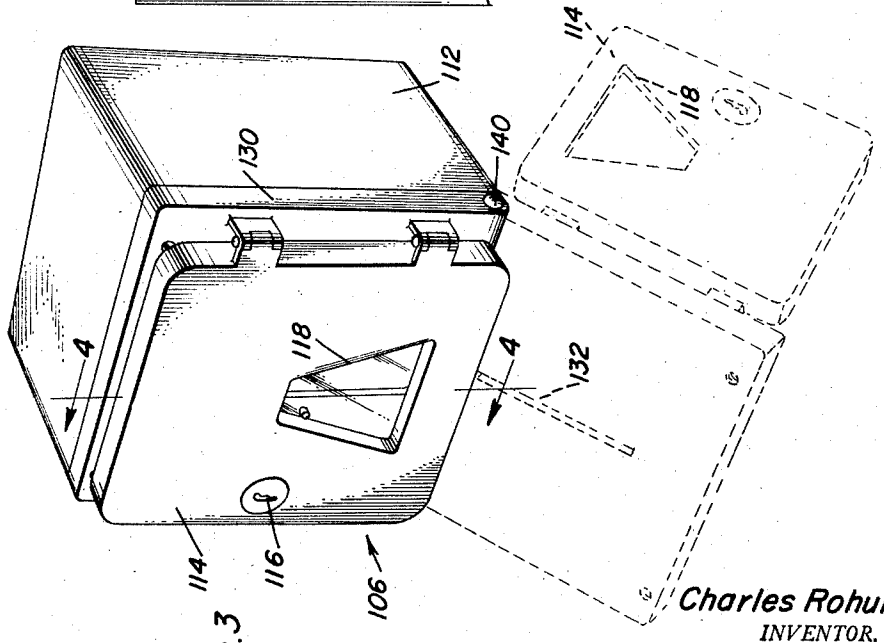

Charles Rohulich
INVENTOR.

BY Lawrence O'Brien and Harvey B. Jacobson
Attorneys

June 16, 1959 C. ROHULICH 2,891,240

THERMAL ALARM

Filed Oct. 28, 1954 4 Sheets-Sheet 4

Fig. 10

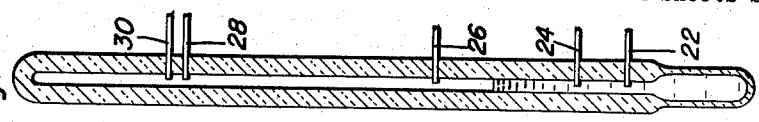

Fig. 6

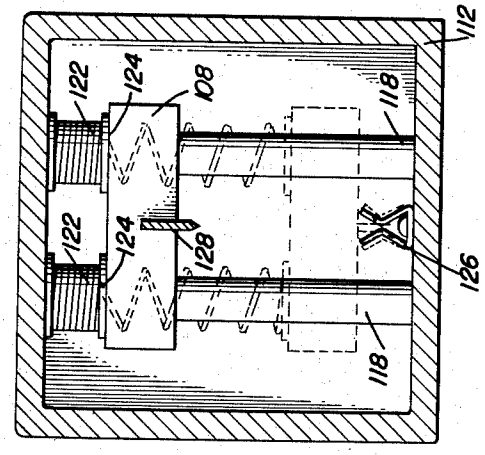

Fig. 9

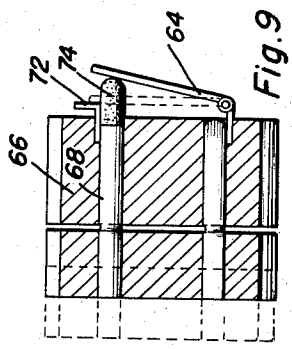

Fig. 5

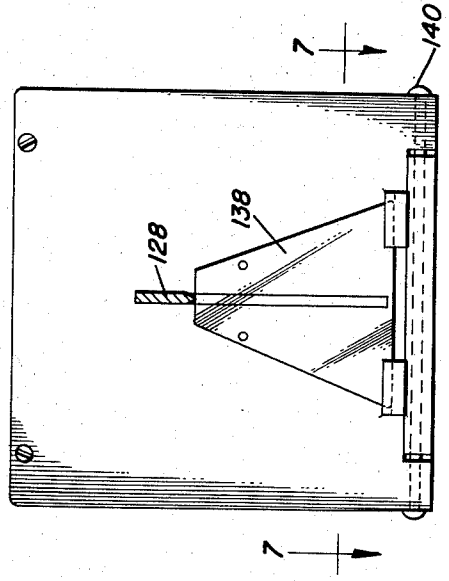

Fig. 8

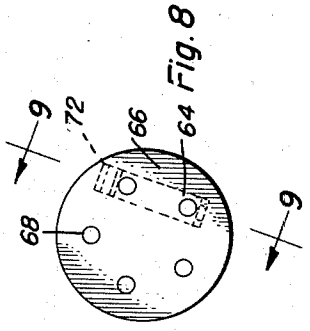

Charles Rohulich
INVENTOR.

BY Thomas A. O'Brien and Harvey B. Jackson
Attorneys

United States Patent Office 2,891,240
Patented June 16, 1959

2,891,240

THERMAL ALARM

Charles Rohulich, Scranton, Pa.

Application October 28, 1954, Serial No. 465,185

1 Claim. (Cl. 340—227)

This invention relates generally to electrical signalling apparatus and more particularly to a novel thermal alarm signal system.

The primary object of the present invention resides in the provision of means for automatically actuating an alarm when a predetermined abnormal temperature is reached and which employs mercury actuation devices.

A further object of the invention resides in the provision of a device which is self-supervising and which employs means for transferring the system to proper operation by an auxiliary power supply should the main power supply fail.

Another feature of the invention resides in the provision of a highly advantageous manual actuation device which is highly efficient in operation and easy to reset while employing the glass which is to be broken for actuating the manual actuation device to hold the contact making parts separated.

Still another feature of the invention resides in the means provided for maintaining the thermal alarm signal system in operation even though the system is tampered with.

Still further objects and features of this invention reside in the provision of a thermal alarm signalling system that is simple in its circuits, capable of being used on various types of buildings and like structures, and which employs a novel location panel for indicating precisely where the abnormal heat is or where a device has been tampered with.

These, together with the various ancillary objects and features of the invention which will become apparent as the following description proceeds, are attained by this thermal alarm signal system, a preferred arrangement of parts being shown in the accompanying drawings, by way of example only, wherein:

Figure 1 is the main wiring diagram of the thermal alarm signal system comprising the present invention;

Figure 2 is a wiring diagram illustrating the manner in which manual actuating units can be associated with the thermal alarm signal system and which is especially applicable to public building installation;

Figure 3 is a perspective view of one of the manual actuation units comprising important elements of the invention;

Figure 4 is a vertical sectional view as taken along the plane of line 4—4 of Figure 3;

Figure 5 is a sectional detail view as taken along the plane of line 5—5 of Figure 4;

Figure 6 is another sectional detail view of the manual actuation unit as taken along the plane of line 6—6 in Figure 4;

Figure 7 is a partial sectional view as taken along the plane of line 7—7 of Figure 5;

Figure 8 is a plan view of the arrangement of prong-receiving receptacles forming one of the elements of the automatic actuation units;

Figure 9 is a sectional detail view as taken along the plane of line 9—9 of Figure 8;

Figure 10 is a sectional detail view of the mercury tube forming the main structure of an automatic actuating unit;

Figure 11 is a sectional detail view illustrating the construction of the indicator panel; and

Figure 12 is an elevational view of a portion of the indicator panel as looking along the plane of line 12—12 of Figure 11.

With continuing reference to the accompanying drawings where like reference numerals designate similar parts throughout the various views and with particular attention initially to Figures 1 and 10 it will be noted that herein reference numeral 20 is used to generally indicate each of the automatic thermal actuating units in which there are positioned five contacts 22, 24, 26, 28 and 30. These contacts extend into the tube shown in Figure 10 and are adapted to be successively contacted by the mercury during the expansion of the mercury. Contacts 22 and 24 are placed close enough together to maintain a closed circuit yet far enough apart so that they do not make contact with one another directly in such position that both of the contacts 22 and 24 are in contact with the mercury within the tube at all times allowing current to pass from contact 22 to contact 24 when the unit is in normal functioning status and not broken or tampered with. This affords a novel means of providing electrical supervision of the actuating device and source of energy wherein a break will be indicated by distinctive trouble signal 32 by means of a supervisory relay 34 which automatically switches to the auxiliary battery current from the batteries 36 under which the system will operate until normal conditions are restored. Contact 26 is provided as a safety feature by providing connections for conduits to carry auxiliary power to the actuating units which are still in operating condition after a break occurs in any particular one of the automatic actuating units 20 or when a particular automatic actuating unit 20 is broken by tampering.

Connected to each of the contacts 26 is a conductor 38 which forms a loop complete operative electrical circuits to supply the automatic actuating units 20 in case there is a break by deliberate cutting of this wire at any point in the loop.

Contacts 28 are provided to carry current through the conductors 40, 42, etc. to the location panel generally designated by reference numeral 44 on which will be designated which actuating unit 20 is being utilized. The locator panel 44 may be positioned in any suitable location within a home or building such as the master bedroom of the home or the superintendent's office of a large public building. Hence, should there be a fire, the location of the fire will be shown on the location panel 44.

Contacts 30 are the signalling contacts. These contacts 30 actuate the mechanism which sets off the fire alarm signal. Connected to each of the contacts 30 is a loop conductor 46 which provides a definite circuit should there be a break or cut in this line.

Current is supplied to the thermal alarm signal system through fuses as at 48 and thence through transformer 50 and then through a rectifier 52 where the alternating current applied is rectified. The current then passes through all of the actuating units and through contacts 22 and 24 thereof by means of conductor 54 as a series circuit and returns to the supervisor relay 34 to actuate the supervisor relay 34. The supervisor relay 34 under normal conditions is energized. Any break in the conductor 54 will release the relay 34 and energize the trouble signal 32 while also bringing into use the auxiliary power supply of the batteries 36.

There is provided a lock relay 56 having locking contacts, not shown, which is energized only when the mercury in the actuation device 20 rises to contact the contact 30. When this relay is energized, the alarm is set off and

the current continues to actuate the alarm until the lock relay 56 is manually released and the actuating devices are in normal position.

A charger 58 is provided so as to keep the batteries 36 constantly charged to insure that the auxiliary power supply will function as needed.

An outdoor fire signal 60 is provided which is placed on the outside of a building to sound an alarm. The purpose of the alarm 60 is to call the attention of any person or persons passing by that there is a fire in the house or building and that they should thus turn in an alarm to summon the fire department to put the fire out. In cooperation with the alarm 60 there is a light 62 which may be placed in the same box with the alarm 60 and which may have positioned in front of the lamp 62 a piece of glass with the word "fire" printed thereon. When the alarm is sounded at night, for example, the person who hears the sound would see the word "fire" illuminated and turn in an alarm to the fire department. This feature is highly advantageous when the occupants of the building are not at the building and the alarm is set off.

Reference numeral 64 generally designates a switch associated with each of the automatic actuating units 20 for designating which of the actuating units have been removed from circuit. This switch 64 works in conjunction with the female tube socket 66 provided for receiving the prong leads which are connected to each of the contacts 22, 24, 26, 28 and 30 of each of the actuation units 20. Each of these prong receiving receptacles 68 is adapted to receive prongs therein. However, associated with one of the receptacles 66 is a spring contact 64 which is adapted to engage a contact maker 72 associated with a different one of the prong receptacles. The spring contact 64 is adapted to be pushed out of engagement with the contact 72 by means of an insulated plug 74 attached to one of the prongs. When the prongs are removed from the prong receptacles 68, the spring switch member 64 will be actuated. The switch when actuated completes an operative electrical circuit to the associated lamp 86 in a manner which will be hereinafter made apparent.

There is provided an indoor alarm 76, see Figure 1, which is located on the location panel 44 and which will operate simultaneously with the outdoor alarm 60. A trouble signal lamp 78 is also provided on the location panel 44.

The location panel 44 can be seen best in Figures 1, 11 and 12, and is so arranged that there are a series of pairs of contacts 80 and 82 actuated by solenoids 84 when the solenoids 84 are energized through conductors 40, 42 etc. The contacts 82 are provided to maintain a current and to keep the lamps 86 actuated until the mechanism is reset by hand. When a fire gets so hot that it will burst a thermal actuating unit 20, the current which would have flowed through the contacts 28 thereof to the location panel through the wires 40, 42 etc. will be cut off. Therefore, a direct connecting wire is provided to the switch contacts 80 which in turn supplies current to the switch contacts 22 to thus keep the lamps 86 energized. Therefore, the switch 82 turns the lamps 86 on and keeps the lamps energized until the mechanism is reset by hand.

Reference numeral 88 generally designates one of the switches which are normally closed but open when one or more of the solenoid coils 84 are energized. These switches 88 remain closed until the switches 80 and 82 close as previously described. Then, the switches 88 open thereby deenergizing the coils 84. The contacts 80 and 82 remain closed after the solenoid 84 is deenergized until reset. The operation of the actuation elements of the location panel can be understood best from an inspection of Figures 11 and 12. The location panel 44 is made of a suitable material and pairs of guides 92 and 94 are mounted on the panel 44. Disks 96 are slidably mounted within the guides 92 and 94 and are made of a material easily visible having an aperture as at 98 therethrough.

There are provided in the panel 44 apertures 100 through which the lamp 86 can shine. When the coil 84 is energized, the armature 102 which carries the contacts 80, 82 and 88 will release the disk 94 which then falls by gravity in front of the aperture 100 and is illuminated by the light from the lamp 86. At the same time, the armature 102 actuates the contacts 80, 82 and 88 thus closing the circuits of the contacts 80 and 82 and opening the circuit of the contact 88.

In Figure 2 there is shown a diagram of the manner in which manual actuating units may be incorporated as necessary and connected to the automatic actuating units so that they may utilize the same mechanisms as the automatic units utilize. They are wired directly to the automatic units 20 as shown with the manual contacts connected to the corresponding automatic contacts. Reference numeral 106 generally designates each of the manual actuating units in which a cross bar 108 which is a good conductor is provided and which acts as a switch to complete the circuit and the actuation of the alarm when the manual unit is actuated. The cross bar 108 is adapted to engage contacts interconnected through a series of conductors 110 to the various contacts 22, 24, 26, 28 and 30 of the automatic actuating unit 20.

Referring more particularly to Figures 3 through 7, it will be noted that each of the manual actuating units 106 is shown in detail. The manual actuating unit 106 consists of a casing 112 of an approved fire resistant material. Hingedly secured to the casing 112 is a door 114 provided with a lock 116 and an opening 117 therethrough. Mounted within the casing 112 are a pair of steel bars 118 on which the cross bar 108 is mounted for vertical sliding movement. Compression springs 122 are positioned on the vertical bars 118 and washers 124 are provided for assuring equal pressure of the compression springs 122 on the cross bar 108. Spring type contact members 126 are positioned in the casing 112 and are adapted to engage the contact 128 carried by the cross bar 108 when the cross bar 108 is forced down by the springs 122.

The door 114 overlies the front piece 130 of the casing 112 which is provided with a slot 132 to permit vertical movement of the cross bar 108 and associated contact 128. Further, the front piece 130 has two protrusions 134 thereon as well as two brackets 136 in which a pane of glass of trapezoidal shape and designated by reference numeral 138 is mounted. The front piece is hinged as at 140 so that the manual actuating element 106 can be reset. The contact 128 of the cross bar 108 is notched slightly and seats on the glass 138 and thus is prevented from engaging the contact 126 until the glass 138 has been broken.

The manual actuating device 106 functions when the glass 138 is broken allowing the bar 108 to be forced down by the springs 122 to contact the contacts 126 thereby sounding the alarm. To reset the mechanism, the door 114 is unlocked and the cross bar 108 as well as the contact 128 are pushed up manually and held with a tool (not shown), and then the front piece is closed and the glass 138 is replaced. The glass 138 lies against the protrusions 134 which help keep the glass at evenly spaced distance away from the front piece. This hollow space behind the glass renders it very easy to break. Further, the contact bar 128 is provided with a slight groove as at 142 just where the glass touches it to help hold the glass firmly in position. The door is then closed and locked and the unit is ready for use again. The glass 37 is designed in a trapezoidal shape to insure sufficient breakage to provide contact between the contact bar 128 and the contacts 126.

From the foregoing, the construction and operation of the device will be readily understood and further explanation is believed to be unnecessary. However, since numerous modifications and changes will readily occur to those skilled in the art, it is not desired to limit the

invention to the exact construction shown and described, and accordingly, all suitable modifications and equivalents may be resorted to, falling within the scope of the appended claim.

What is claimed as new is as follows:

In a thermal alarm system, the combination of a set of automatic actuation devices each including a mercury filled tube and a plurality of contacts therein for completing electrical circuits, two of the contacts in each actuation device tube being normally electrically bridged by the mercury in the tube, a relay, a main current source, a normally closed primary circuit connecting said relay in series with said two contacts of each of said actuation devices to said main current source whereby the relay is normally energized, an auxiliary current source, a normally open secondary circuit connecting said relay in series with said two contacts of each of said actuation devices to said auxiliary current source, said secondary circuit being closed by said relay upon failure of said primary circuit to maintain the relay energized, a locator panel including a set of locator devices, a locator circuit connecting the respective locator devices in series with another of the contacts of the respective actuation devices to said relay for selective actuation by said primary and secondary circuits, and alarm means in circuit with another of the contacts of the actuation devices and with said relay.

References Cited in the file of this patent

UNITED STATES PATENTS

1,138,688	Reid	May 11, 1915
1,927,744	Jones	Sept. 19, 1933
2,314,584	Kritz	Mar. 23, 1943
2,433,080	Willett	Dec. 23, 1947
2,492,043	Holmes	Dec. 20, 1949
2,545,854	Levy	Mar. 20, 1951
2,605,342	Spurling	July 29, 1952
2,629,797	Hardy	Feb. 24, 1953
2,632,070	Verkuil	Mar. 17, 1953