Dec. 10, 1929. C. H. GEMBERLING 1,738,885

SPOOL FOR DISK GANG ASSEMBLIES

Filed May 16, 1928

Fig. 1.

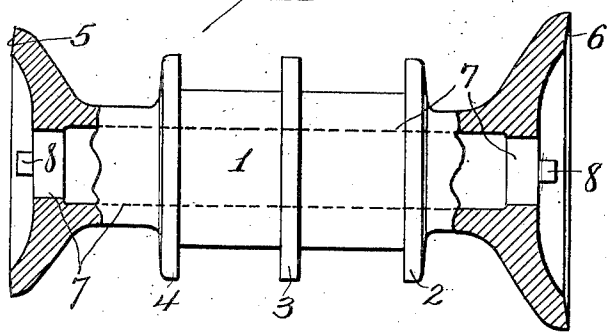

Fig. 2.

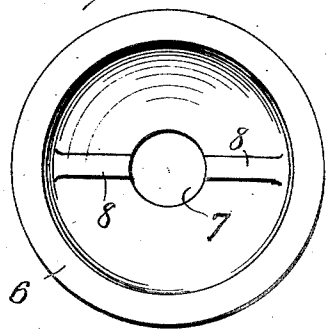

Fig. 3.

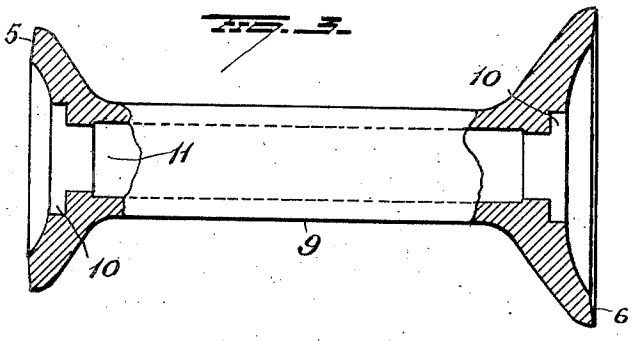

Fig. 4.

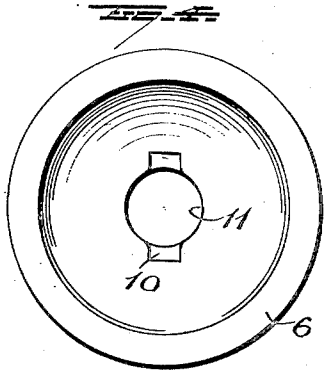

Fig. 5.

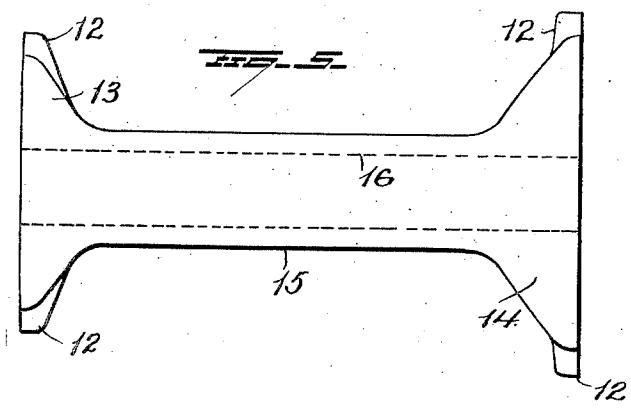

Fig. 6.

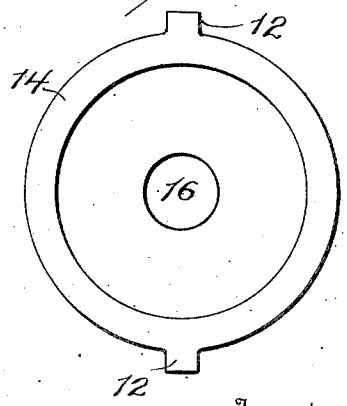

Inventor

C. H. Gemberling

By Seymour & Bright

Attorneys

Patented Dec. 10, 1929 1,738,885

UNITED STATES PATENT OFFICE

CAMERON H. GEMBERLING, OF SOUTH BEND, INDIANA, ASSIGNOR, BY MESNE ASSIGNMENTS, TO OLIVER FARM EQUIPMENT COMPANY, A CORPORATION OF DELAWARE

SPOOL FOR DISK-GANG ASSEMBLIES

Application filed May 16, 1928. Serial No. 278,201.

This invention relates to improvements in spreader spools for disk harrow or other disk gang assemblies, and more particularly to such spools as have bores which are round in cross section.

In the construction of spreader spools for use in disk gang assemblies, it is the practice to face the same at each end in order to true them up, and so that they fit accurately against the surfaces of the disks which are clamped between them. This facing operation is usually done on a vertical drill press and when the spool has an angular bore (which is the usual construction), resort need not be had to special features of construction of the spool in order that the same may be accurately faced. The usual procedure is to mount the spool having an angular bore, upon the table of the drill press having an upwardly projecting fixed pin, the cross sectional outline of which is angular,—said pin entering the similarly shaped bore of the spool. The end of the spool will now be operated upon by a suitable facing tool which has been substituted, in the drill press, for a drilling tool, and the spool will be held from turning during the facing or truing operation by the angular pin on the table of the drill press.

When a spool has a bore which is round in cross section for the accommodation of a shaft of like cross section, a different problem is presented to insure the retention of the spool against turning during the facing or truing operation on the ends of the spool, and it is an object of my invention to so construct a spool having a bore with a round cross section, that its retention against turning during the facing or truing operations will be facilitated when cooperating with stop means on the table of the drill press.

With this and other objects in view, the invention consists in a certain novel construction as hereinafter set forth and pointed out in the claims.

In the accompanying drawings;

Figure 1 is a view partly in elevation and partly in section illustrating one embodiment of my invention;

Figure 2 is an end view of the same;

Figures 3 and 4 are views of a modified construction, and

Figures 5 and 6 are views illustrating another embodiment of the invention.

In Figure 1 of the drawing is shown a bearing spool 1 for use in a disk gang assembly, although my improvements are equally well adapted to all of the other spools of a disk gang assembly. The spool shown in Figure 1 is provided with annular flanges 2, 3, 4, to retain the wooden bearings by means of which the disk gang is held in a disk harrow frame. Two such bearing spools are usually employed in a disk gang assembly and the other spools are usually plain. My invention is not restricted to either type of spool and so far as my present invention is concerned, further reference to a bearing spool rather than a plain spool is unnecessary, and future reference herein to a spool is intended to comprehend a spreader spool of either type, so long as it is provided with a bore having a round or circular cross section.

The end faces to be machined or ground are represented at 5 and 6 at respective ends of the spool 1.

The bore 7 of the spool is round or circular in cross section or in end elevation as illustrated in Figure 2, and a round or cylindrical pin will be substituted on the table of the drill press for the angular pin to which reference has hereinbefore been made, said round or cylindrical pin being made to enter the spool when the latter is placed upon the table under the facing tool, and, at respective sides of said pin, the table will be provided with other pins or stop means to engage parts constituting stop means with which each end of the spool is provided so that the spool will be prevented from turning during the facing, truing or machining operation.

In the embodiment of the invention shown in Figures 1 and 2, the stop means on the spool consists of radial ribs or projections 8, 8 at each end thereof and at respective sides of the bore of the spool, said stop means being adapted to engage pins or stop means hereinbefore mentioned, on the drill press table at respective sides of the pin on the

latter which enter the bore of the spool. With such construction, it is apparent that a spool provided with a bore which is round in cross section, may be held stationary in a vertical position on the table of a drill press, while its engaging surface at either end of the spool is being machined or ground with a truing tool.

The ribs or projections 8, 8 serve as reinforcing elements in addition to their functions as stops to facilitate the facing or machining operation on the spool ends.

In the embodiment of the invention shown in Figures 3 and 4, each end of the spool 9 is provided with notches or recesses 10 which communicate with the round bore 11 in the spool preferably at diametrically opposite positions, said notches or recesses forming shoulders which constitute stops for cooperation with the pins on the drill press table to prevent the spool from turning during the machining or facing operation.

In the embodiment of the invention shown in Figures 5 and 6, the stops on the spool ends, are formed by lugs 12 projecting laterally from peripheral portions of the enlarged ends 13, 14 of the spool 15 to engage stops suitably spaced on the table of the drill press,—the bore 16 of the spool shown in Figures 5 and 6 being round in cross section.

Having fully described my invention what I claim as new and desire to secure by Letters-Patent, is:—

1. A spool for a disk gang assembly having an annular bearing flange at each end and having a central bore which is round in cross section, said spool having stop shoulders on each end for cooperation with stop means on the table of a machine for facing the end bearing flanges of the spool, the stop shoulders on the spool being located laterally of the central bore of the spool and without the effective area of the bearing flanges.

2. A spool for a disk gang assembly having annular end bearing flanges and a central bore which is round in cross section, said spool having stop means on each end for cooperation with stop means on the table of a machine for facing the end bearing surfaces of the spool, the stop means on the spool consisting of projections on the spool ends disposed entirely outside the effective area of the bearing flanges.

3. A spool for a disk gang assembly having annular end bearing flanges and a central bore which is round in cross section, said spool having stop means on each end for cooperation with stop means on the table of a machine for facing the end bearing flanges of the spool, the stop means on the spool consisting of projections on each spool end, said projections being located laterally in two directions respectively from the central bore of the spool and entirely outside the effective area of the flanges.

4. A spool for a disk gang assembly having annular end bearing flanges and a central bore which is round in cross section, said spool having stop means on each end for cooperation with stop means on the table of a machine for facing the end bearing flanges of the spool, the stop means on the spool consisting of ribs on each end of the spool, the ribs on each end of the spool being located opposite each other at respective sides of the bore of the spool and entirely outside the effective area of the bearing flanges.

In testimony whereof, I have signed this specification.

CAMERON H. GEMBERLING.