April 17, 1945. C. N. CROSS 2,373,875

DISPLAY MOUNT

Filed Oct. 14, 1942

Fig. 1.

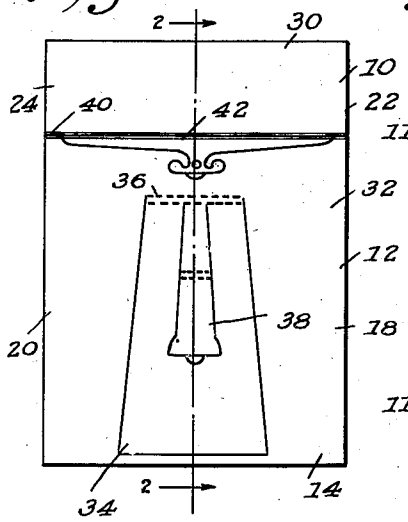

Fig. 5.

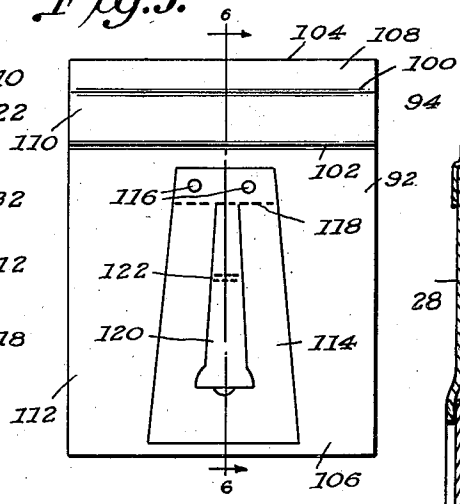

Fig. 6.

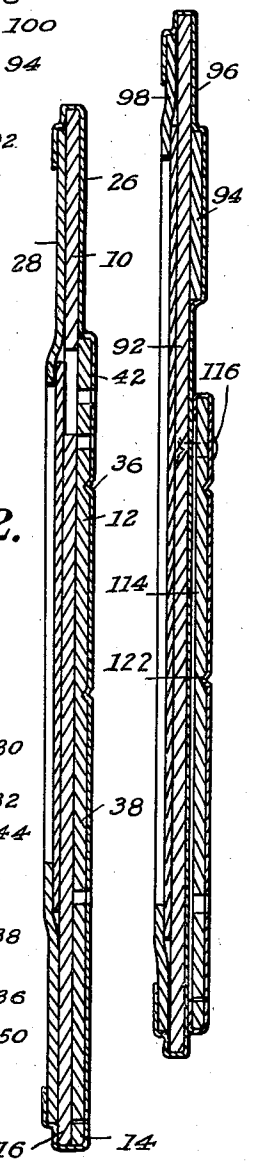

Fig. 2.

Fig. 3.

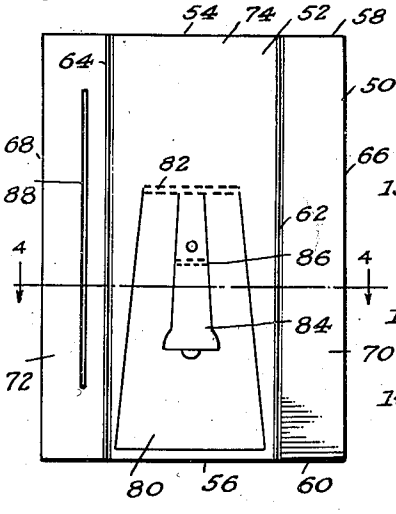

Fig. 7.

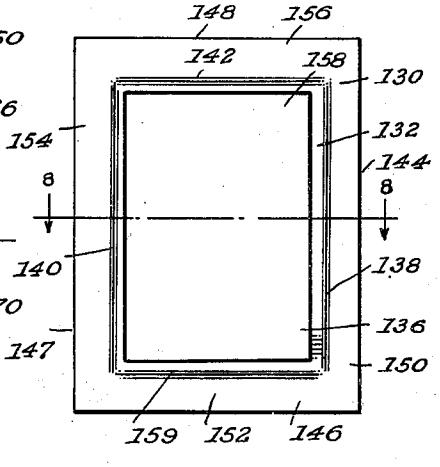

Fig. 4.

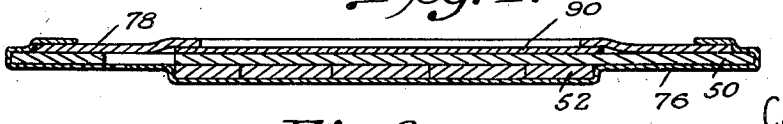

Fig. 8.

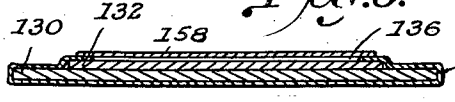

Inventor

CARROLL N. CROSS

By Hemminger and Villars

Attorneys

Patented Apr. 17, 1945 2,373,875

UNITED STATES PATENT OFFICE

2,373,875

DISPLAY MOUNT

Carroll N. Cross, Middleboro, Mass.

Application October 14, 1942, Serial No. 461,982

5 Claims. (Cl. 40—152.1)

This invention relates to display mounts. More particularly, the invention relates to reenforced display mount body construction, which while inexpensive and simple in construction, is effective in overcoming the warping tendencies inherent in such bodies made of light-weight cardboard stock.

Great difficulty has been encountered in the construction of display mounts composed of two or more substantially coextensive boards because of the tendency of such structures to warp. These tendencies have been particularly marked when the boards have been joined together by gluing. When glue is used, it is often found that the warpage in boards so joined is much in excess of the degree to which a single board of equal size will warp. The method of joining two or more substantially coextensive boards by binding them about their edges with a flexible binding material results in a construction that eliminates a large amount of the warpage in the marginal zones, but this method is subject to the disadvantage that such boards will show a greater tendency to warp or bulge in their central areas.

It is therefore the primary object of this invention to produce a display mount body construction of two or more boards wherein the warping characteristics heretofore experienced will be substantially eliminated.

The primary object of the invention is achieved by superimposing on one face of a display mount base board of light-weight stock that in itself is normally subject to warping, a smaller reenforcing board, and then lining the superimposed boards with a flexible lining material that extends over the edges of the smaller board and attaches the same to the surface of the base board with at least some of its edges spaced inwardly from the corresponding edges of the base board. This construction results in a display mount body having zones of different thickness that effectively minimize the usual warping tendencies in mount constructions.

It might be supposed that the formation of mount bodies in this manner would result in a construction that is merely strengthened and reenforced to a degree proportional to the added bulk or area of the reenforcing board. This invention, however, is based on the discovery that the resulting mount body possesses non-warping characteristics bearing no real relation to the size or bulk of the reenforcing body but one which, on the other hand, possesses non-warping tendencies related more nearly to the number of different thickness zones into which the body is divided. Thus, in a construction wherein the body is divided into three zones including marginal zones of single board thickness and a medial zone of double board thickness, the marginal zones will exhibit warping tendencies that are not as great as the warping tendency in a single board of equal size. The medial double zone will exhibit the minimized warping tendency of two boards of the size of the centrally positioned reenforcing board. The marginal zones of single thickness are, of course, further reenforced by contact with the outer edges of the smaller board which prevent substantial warping of that area of the single marginal zones adjacent the medial zone. The utility of the invention taught herein is emphasized by the fact that the cardboard stock of which mounts of this character are constructed will normally warp substantially in proportion to the square of the area.

These and other objects and advantages of the invention will be more fully disclosed in the following description which may be read with regard to the accompanying drawing in which like reference numerals indicate like parts, and in which:

Figure 1 is a rear elevational view of one embodiment of the invention;

Figure 2 is a cross sectional view on line 2—2 of Figure 1;

Figure 3 is a rear elevational view of a modified form of the invention;

Figure 4 is a cross sectional view on line 4—4 of Figure 3;

Figure 5 is a rear elevational view of a further modification of the invention;

Figure 6 is a cross sectional view on line 6—6 of Figure 5;

Figure 7 is an elevational view of a further modification of the invention; and

Figure 8 is a cross sectional view on line 8—8 of Figure 7.

In Figures 1 and 2 there is illustrated one embodiment of the invention wherein a base board 10 is reenforced by the addition of a smaller reenforcing board 12 attached to the rear face thereof. The smaller board 12 has one edge 14 that is coextensive with the bottom edge 16 of the base board 10 and it has two oppositely disposed edges 18 and 20 that are shorter than the corresponding opposite edges 22 and 24 of the base board. These edges 18 and 20 are, however, coincident (i e., in agreement with as to position) throughout their length with the corresponding base board edges 22 and 24. A thin flexible binding material 26 extends over the edges of the smaller board 12 and joins the same

to the base board 10. In the preferred form of this embodiment of the invention the lining material 26 extends about the marginal edges of the base board 10 and terminates on the face of the face board 28 at the front of the mount. This construction divides the mount body into a small thin zone 30 and into a larger thicker zone 32.

A mount supporting easel 34 adapted to swing angularly about one or more score lines 36 may be formed in the body of the reenforcing board 12, and in such case an easel locking tongue 38 is provided for holding the easel in mount supporting position.

In this form of construction a picture-inserting passage can be formed at the upper margin 40 of the reenforcing board 12 and such picture-inserting passage is preferably closed by means of a closure member 42. The picture-inserting passage at the upper margin 40 of the reenforcing board 12 is formed by slotting the base board 10 transversely for a sufficient distance to accommodate the width of a picture or other indicia to be carried on the face of the base board. The picture-inserting passage is conveniently closed by means of the closure 42 which is formed from a marginal portion of the rear board 12 by cutting the rear board and the covering sheet material inwardly from a margin of the rear board to define a severed portion that is hingedly connected to the base board 10 by means of the flexible covering material extending over the exposed faces of the base board and the rear board.

In that form of construction shown in Figures 3 and 4 the base board 50 has attached to the rear face thereof a smaller board 52 which has oppositely disposed horizontal edges 54 and 56 that are shorter than the corresponding opposite horizontal base board edges 58 and 60. The edges 54 and 56 are, however, coincident throughout the length thereof with the corresponding base board edges 58 and 60. The vertical edges 62 and 64 are substantially spaced from opposite vertically disposed base board edges 66 and 68. This construction divides the mount body into relatively thin marginal zones 70 and 72 and a thicker medial zone 74. In this form of the invention, as in the other embodiments thereof, a thin, flexible binding material 76 extends over the reenforcing board 52 and about the edges of the base board 50 and terminates on the margins of a face board 78.

A mount supporting easel 80 may be formed in the body of the reenforcing board 52 and this easel which is adapted to swing angularly about one or more score lines 82 is adapted to be held in mount supporting position by means of a locking tongue 84 that swings angularly about one or more score lines 86.

A picture-inserting slot 88 extends through one of the marginal zones to permit the insertion of a picture 90 as shown in Figure 4.

In that form of the invention illustrated in Figures 5 and 6, the base board 92 is reenforced by means of a smaller reenforcing board 94 that is attached to the rear face of the base board by means of a flexible binding material 96 that extends over the edges of the smaller reenforcing board 94 and about the edges of the base board 92. The lining material 96 terminates on the face of a face board 98. In this form of the invention the horizontally disposed edges 100 and 102 of the reenforcing board 94 are substantially coextensive with the horizontal edges 104 and 106 of the base board, but the edges 100 and 102 are spaced inwardly from the edges 104 and 106 thereby producing three zones that differ in size. The zone 108 at the top of the mount is a relatively thin zone while the zone 110 immediately therebelow is a thicker zone while the larger zone 112 is relatively thin. In this particular form of the invention a separately fabricated mount supporting easel 114 is attached to the base board 92 by means of rivets 116. The easel 114 is adapted to swing angularly into mount supporting position about a score line 118 and the same may be latched in mount supporting position by means of a locking tongue 120 that is adapted to move angularly about a score line 122.

In that form of the invention illustrated in Figures 7 and 8, a base board 130 is reenforced by the addition of a smaller reenforcing board 132 which herein is illustrated as being attached to one face thereof by means of a flexible lining material 134 that extends over the back of the base board 130, around the marginal edges thereof, over the marginal edges of the reenforcing board 132 and which terminates on the face of the reenforcing board 132 at a point somewhat inward of the margins thereof. A lining trim 136 may be glued over the marginal edges of the lining at 34 and over the facial surface of the reenforcing board 132.

In this embodiment of the invention the marginal edges 138, 139, 140, and 142 of the reenforcing board 132 are all inwardly spaced with respect to the marginal edges 144, 146, 147, and 148, respectively, of the base board 130. This construction in effect results in a mount that includes five different thickness zones, these zones being the marginal zones 150, 152, 154, 156 of single thickness and the central zone 158 composed of a double thickness of board.

Herein the flexible lining material that joins the reenforcing boards to the base boards has been illustrated as extending about the marginal edges of the base board, but this construction has been shown only for purpose of illustration because the invention is equally effective if the lining material does not extend about the edges of the base board in those constructions wherein a joint can be made between the base board and reenforcing boards without the necessity of binding the base boards about their marginal edges; the lining material being important herein to attach the smaller board to the base board and for this purpose it need only be attached to and extend over the inwardly spaced margins of the smaller board and onto the outwardly extending margins of the base board.

The embodiments of the invention herein illustrated have been selected for the purpose of illustration only and to make it clear that the invention is capable of numerous embodiments and such illustrations are not to be considered as limitations on the terms of the following claims.

I claim:

1. A picture mount comprising a base board, a front board shorter in one dimension loosely superposed thereon, a rear board substantially shorter in one dimension superposed on the other face, sheet material adhesively secured over the faces of the superposed boards to bridge from the front and rear boards to the projecting portions of the base board to secure the boards together, a sight opening cut through the front board, and the rear board and its covering having cuts therethrough extending inwardly from a margin of

said rear board beyond which the base board projects and defining a severed portion of the rear board hingedly connected to the base board at said margin by the covering.

2. A picture mount comprising a base board, an apertured front board secured thereto and forming a frame to overlie the margins of a picture set on said base board, a rear board substantially shorter in one dimension than said bast board loosely superposed thereon, and means for securing the rear board to the face board comprising sheet material which extends over the rear face of the former and the portion of the latter projecting beyond the same and adhesively secured to said surfaces, the rear board and such sheet material having cuts therethrough extending inwardly from a margin of said rear board and defining a severed portion of the rear board hingedly connected to the base board at said margin by the covering.

3. In a display mount or the like, a picture-supporting base board composed of light-weight stock being normally subject to warping, a substantially smaller board loosely superimposed on one face of said base board, said smaller board having two oppositely disposed edges coincident throughout their length with two similarly disposed opposite edges of said base board, a thin flexible lining material attached to the face of said boards and extending over the edges of said smaller board joining the same to said base board thereby forming a mount body having zones of different thickness minimizing warping tendencies of said base board, a picture-inserting passage through said base board adjacent an edge of said smaller board beyond which the base board projects, and a centrally apertured face board overlying the marginal area of the opposite face of said base board for retaining a picture or the like in contact with said face.

4. In a display mount or the like, a picture-supporting base board composed of light-weight stock being normally subject to warping, a substantially smaller board loosely superimposed on one face of said base board, said smaller board having an edge coextensive with an edge of said base board and having two oppositely disposed edges shorter than but coincident throughout their length with two oppositely disposed edges of said base board, a thin flexible lining material adhesively attached to the face of said boards and extending over the edges of said smaller board joining the same to said base board thereby forming a mount body having zones of different thickness minimizing warping tendencies of said base board, a picture-inserting passage through said base board adjacent an edge of said smaller board beyond which the base board projects, and a centrally apertured face board overlying the marginal area of the opposite face of said base board for retaining a picture or the like in contact with said face.

5. In a display mount or the like, a picture-supporting base board composed of light-weight stock being normally subject to warping, a substantially smaller board loosely superimposed on one face of said base board, said smaller board having oppositely disposed horizontal edges that are shorter than but coincident with oppositely disposed horizontal edges of said base board and opposite vertically disposed edges that are substantially spaced from opposite vertically disposed edges of said base board, a thin flexible lining material adhesively attached to the face of said boards and extending over the edges of said smaller board joining the same to said base board thereby forming a mount body having zones of different thickness minimizing warping tendencies of said base board, a picture-inserting passage through said base board adjacent an edge of said smaller board beyond which the base board projects, and a centrally apertured face board overlying the marginal area of the opposite face of said base board for retaining a picture or the like in contact with said face.

CARROLL N. CROSS.