June 4, 1946. L. B. GREENLEAF 2,401,632

MAGAZINE FOR MAGNETIC RECORDING APPARATUS

Filed April 18, 1945

Fig. 1

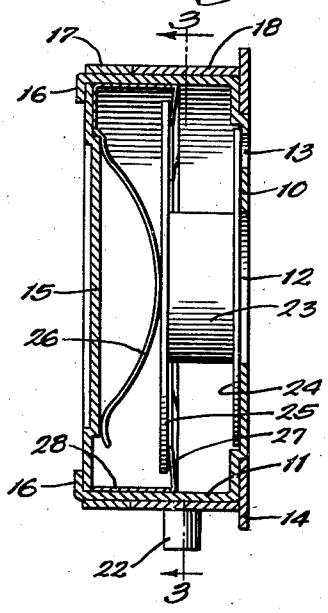

Fig. 2

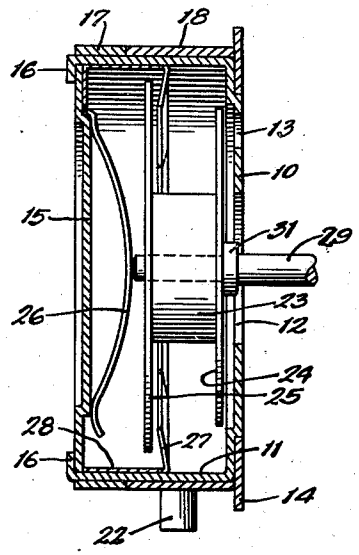

Fig. 3

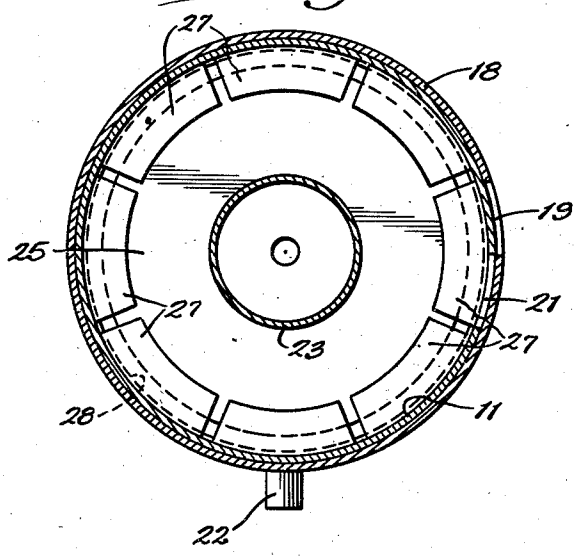

Inventor:
Leland B. Greenleaf,
By Dawson, Owen and Booth,
Attorneys.

Patented June 4, 1946 2,401,632

UNITED STATES PATENT OFFICE

2,401,632

MAGAZINE FOR MAGNETIC RECORDING APPARATUS

Leland B. Greenleaf, Elkhart, Ind., assignor to C. G. Conn, Ltd., Elkhart, Ind., a corporation of Indiana

Application April 18, 1945, Serial No. 589,043

6 Claims. (Cl. 242—54)

1

This invention relates to magazines for magnetic recording apparatus and more particularly to wire supply magazines adapted to be detachably connected to magnetic recording or reproducing devices to carry a supply of wire therefor.

In handling wire for apparatus of this type, the wire tends to unwind from the spool on which it is carried when the machine is not in operation. When the spool is carried in a housing or casing, the wire has a tendency to spring over the flanges of the spool and to become tangled between the spool and the housing if tension is not maintained on the wire.

It is one of the objects of the present invention to provide a magazine carrying a spool of wire in which the wire is prevented from springing over the spool flanges.

Another object is to provide a magazine including means yieldingly engaging a flange on the spool to hold the wire on the spool.

Still another object is to provide a magazine in which the spool is held against one end of the housing when the housing is detached from the apparatus and spring fingers are provided engaging the spool flange which is spaced from the housing and to prevent the wire from springing over the flange.

The above and other objects and advantages of the invention will be more readily apparent from the following description when read in connection with the accompanying drawing, in which—

Figure 1 is an axial section of a magazine embodying the invention.

Figure 2 is a section showing the position of the magazine parts when installed on a recording or reproducing apparatus; and

Figure 3 is a section on the line 3—3 of Figure 1.

The magazine of the present invention comprises essentially a housing which is adapted to be detachably mounted on a recording or reproducing apparatus and which carries a spool of wire to be supplied to the apparatus. The housing, as shown, is formed of non-magnetic metal, plastic or the like and includes a main housing part forming an end wall 10 and an annular side wall 11 shown as integral with the end wall. The end wall 10 is formed with a central opening 12 to receive the shaft of the recording or reproducing apparatus and with an eccentric locating opening 13 to receive a locating pin on the apparatus. A fastening plate 14 is secured to the end wall 10 and projects beyond the periphery of the housing to be engaged by suitable fastening means on the apparatus. As shown, the end wall 10 is offset outwardly at its central portion for a purpose to appear later.

2

The main housing part is closed by a second end wall 15 secured to the side wall 11 as by staking, welding or the like. As shown, projecting fingers 16 on the side wall extend through openings in the end wall 15 and are bent over to secure the end wall in place. The end wall 15 is formed with a circular flange 17 extending partially over the side wall 11 and terminating short of the fastening plate 14 to provide space for an annular rotatable gate member 18. The gate member 18 is in the form of an annular strip having an opening 19 therethrough to register with a corresponding opening 21 in the side wall 11 when the gate is turned to the proper position. To facilitate turning of the gate, a finger 22 is secured thereto to be engaged by the operator.

A spool is mounted in the housing and may be formed in any desired manner of sheet metal, plastic or the like with a central hub portion 23 and end flanges 24 and 25. The end flange 24 lies next adjacent the end wall 10 of the housing and is of a size to fit within the recess therein so that when the parts are in the position shown in Figure 1 the flange 24 and outer portion of the end wall 10 provide a substantially smooth surface. The spool is urged toward the end wall 10 by a spring shown as a leaf spring 26 carried in the housing and engaging the adjacent end of the spool. The spool is formed with an opening to receive the shaft of the apparatus and the spring 26 preferably overlies the opening so that it will be engaged by the shaft when the magazine is installed on the apparatus.

To prevent wire on the spool from springing over the flange 25, the housing is provided with annular spring means yielding to engage this flange. As shown, the spring means comprises an annular series of inwardly extending spring fingers 27 yieldingly engageable with the inner face of the flange 25 to prevent wire on the spool from passing between the flange 25 and the housing. The spring fingers are conveniently bent fron an annular spring strip 28 fitting within the housing and are preferably closely spaced as best seen in Figure 3 to leave no space through which wire could pass.

When the spool is detached from the apparatus, the parts will occupy the position shown in Figure 1 with the spring 26 pressing the flange 24 into the recess in the end plate 10 and with the spring

fingers 27 engaging the inner face of the flange 25. Preferably the spring 26 is stronger than the spring fingers 27 so that the spool will be urged against the end wall 10. With the parts in this condition, the wire cannot spring over either of the flanges 24 or 25 regardless of lack of tension in the wire so that tangling is prevented.

When the magazine is installed on a recording or reproducing device, the shaft of the device indicated at 29 will extend through the opening in the spool to engage the spring 26 and move it away from the spool. Preferably the shaft is formed with a collar 31 to engage the spool and move it away from the end wall 10 of the housing. This movement is preferably sufficient to move the flange 25 away from the spring fingers 27 so that the spool is freely supported in the housing. At this time the gate 18 can be turned to bring the openings 19 and 21 into register so that wire can freely be withdrawn from or wound on the spool. Upon completion of a recording or reproducing operation, the end of the wire projecting through the registering openings 19 and 21 may be gripped by turning the gate 18 substantially to the position shown in Figure 3 so that the wire will be held under slight tension when the magazine is removed from the apparatus.

While one embodiment of the invention has been shown and described in detail, it will be understood that this embodiment is illustrative only and is not intended as a definition of the scope of the invention, reference being had for this purpose to the appended claims.

What is claimed is:

1. A magazine for a magnetic recording apparatus comprising a substantially circular housing, a spool in the housing having a central hub portion and end flanges, annular spring means in the housing engageable with the inner face of one of the flanges, and means in the housing yieldingly urging the spool in a direction to cause the spring means to engage the flange.

2. A magazine for a magnetic recording apparatus comprising a substantially circular housing, a spool in the housing having a central hub portion and end flanges, a spring in the housing engaging the spool to urge it axially toward one end of the housing, and annular spring means in the housing engageable with the inner face of the flange which is remote from said one end of the housing.

3. A magazine for a magnetic recording apparatus comprising a substantially circular housing, a spool in the housing having a central hub portion and end flanges, a spring in the housing engaging the spool to urge it axially toward one end of the housing, and an annular series of resilient fingers extending inwardly from the housing to engage the inner face of the flange which is remote from said one end of the housing.

4. A magazine for a magnetic recording apparatus comprising a substantially circular housing, a spool in the housing having a central opening to receive a shaft and having end flanges, a spring in the housing engaging the spool to urge it axially toward one end of the housing, and annular spring means in the housing engageable with the inner face of the flange remote from said one end of the housing, the end of the shaft being engageable with the spring to move it away from the spool whereby said flange can disengage the spring means.

5. A magazine for a magnetic recording apparatus comprising a substantially circular housing, a spool in the housing having a central opening to receive a shaft and having end flanges, a spring in the housing engaging the spool to urge it axially toward one end of the housing, and an annular series of resilient fingers extending inward from the housing to engage the inner face of the flange remote from said one end of the housing, the spring overlying the opening through the spool to be engaged by the end of the shaft and moved away from the spool.

6. A magazine for a magnetic recording apparatus comprising a substantially circular housing, a spool in the housing having end flanges of different diameters, one end of the housing being recessed to receive the flange of smaller diameter, a spring in the housing urging the spool toward said one end of the housing, and annular spring means in the housing engageable with the inner face of the flange of larger diameter.

LELAND B. GREENLEAF.