Oct. 18, 1949. J. E. GORRELL 2,485,151

GEAR-CHANGING DRIVE

Filed Nov. 24, 1945 4 Sheets-Sheet 1

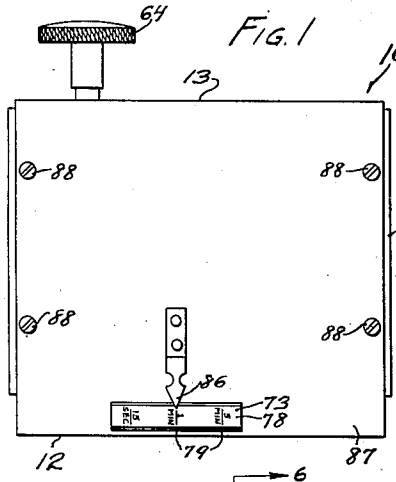

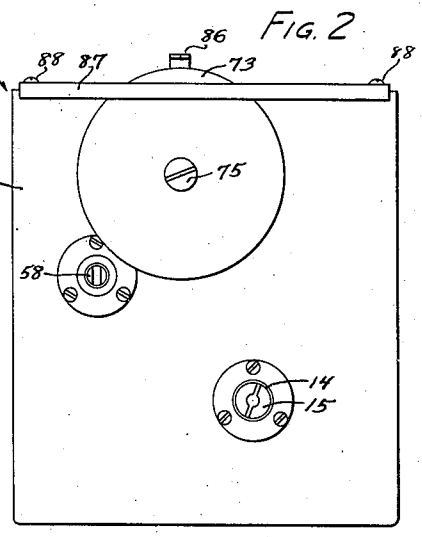

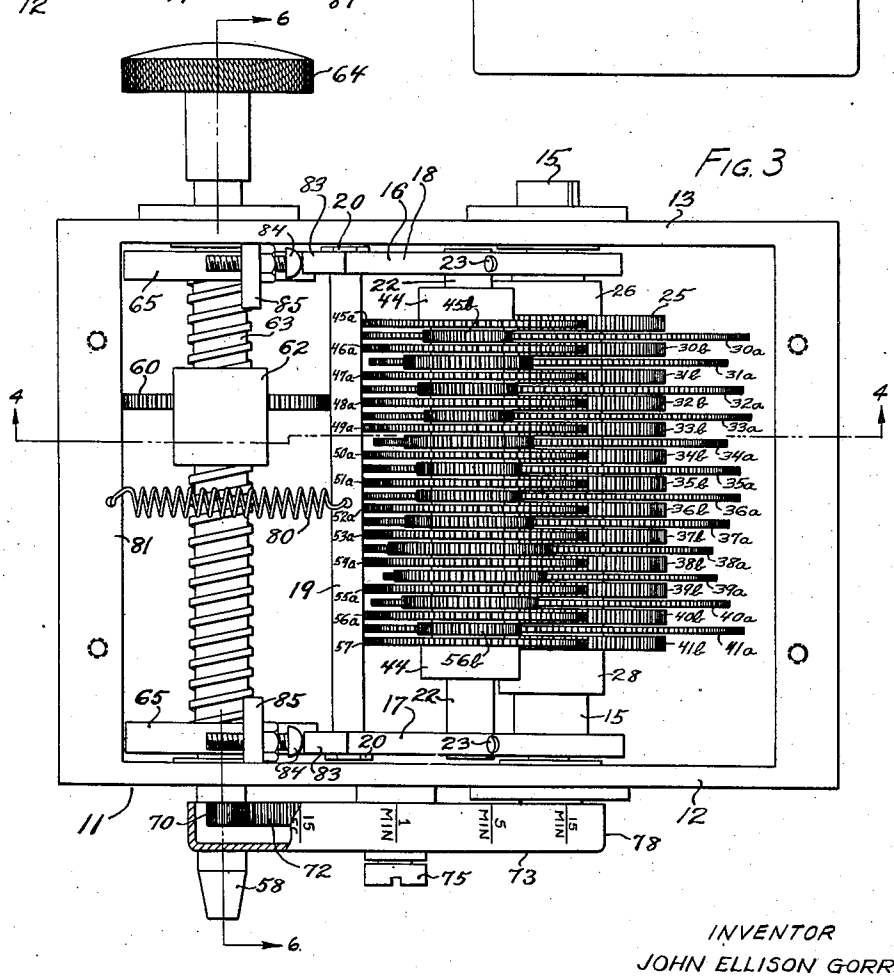

INVENTOR
JOHN ELLISON GORRELL
By Seymour, Earle & Nichols
ATTORNEYS

GEAR-CHANGING DRIVE

Filed Nov. 24, 1945 4 Sheets-Sheet 2

FIG. 4

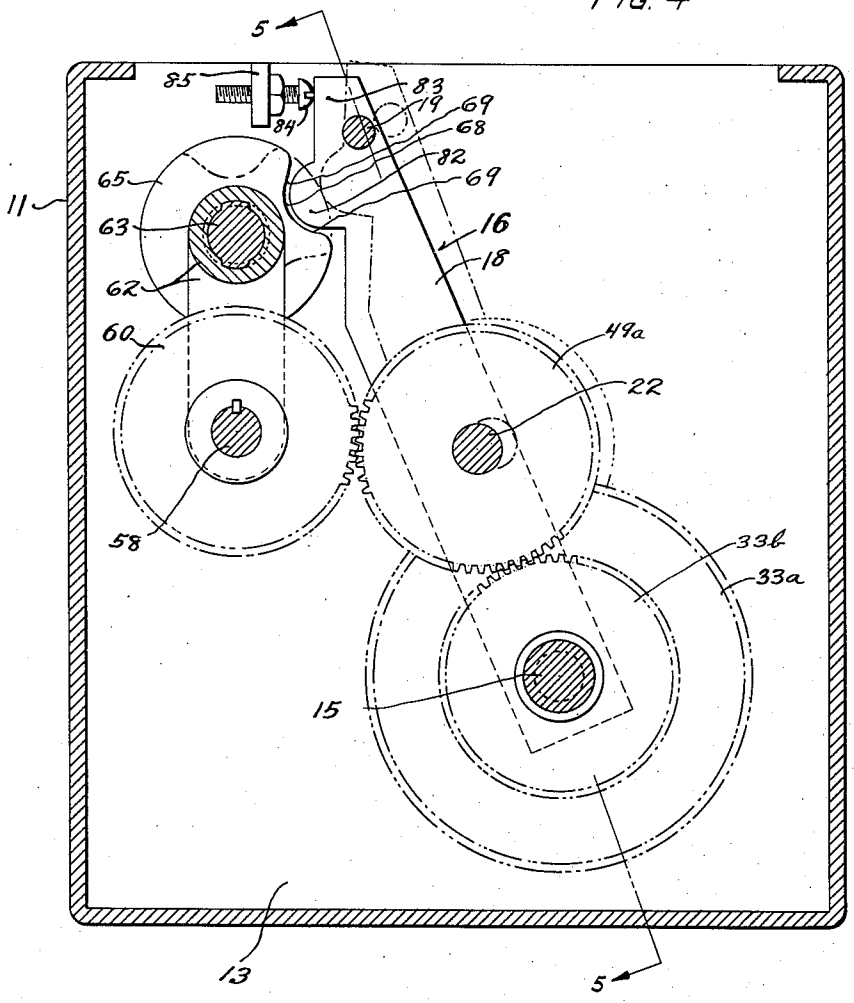

INVENTOR
JOHN ELLISON GORRELL
By Seymour, Earle & Nichols
ATTORNEYS

Oct. 18, 1949. J. E. GORRELL 2,485,151

GEAR-CHANGING DRIVE

Filed Nov. 24, 1945 4 Sheets-Sheet 3

FIG. 5

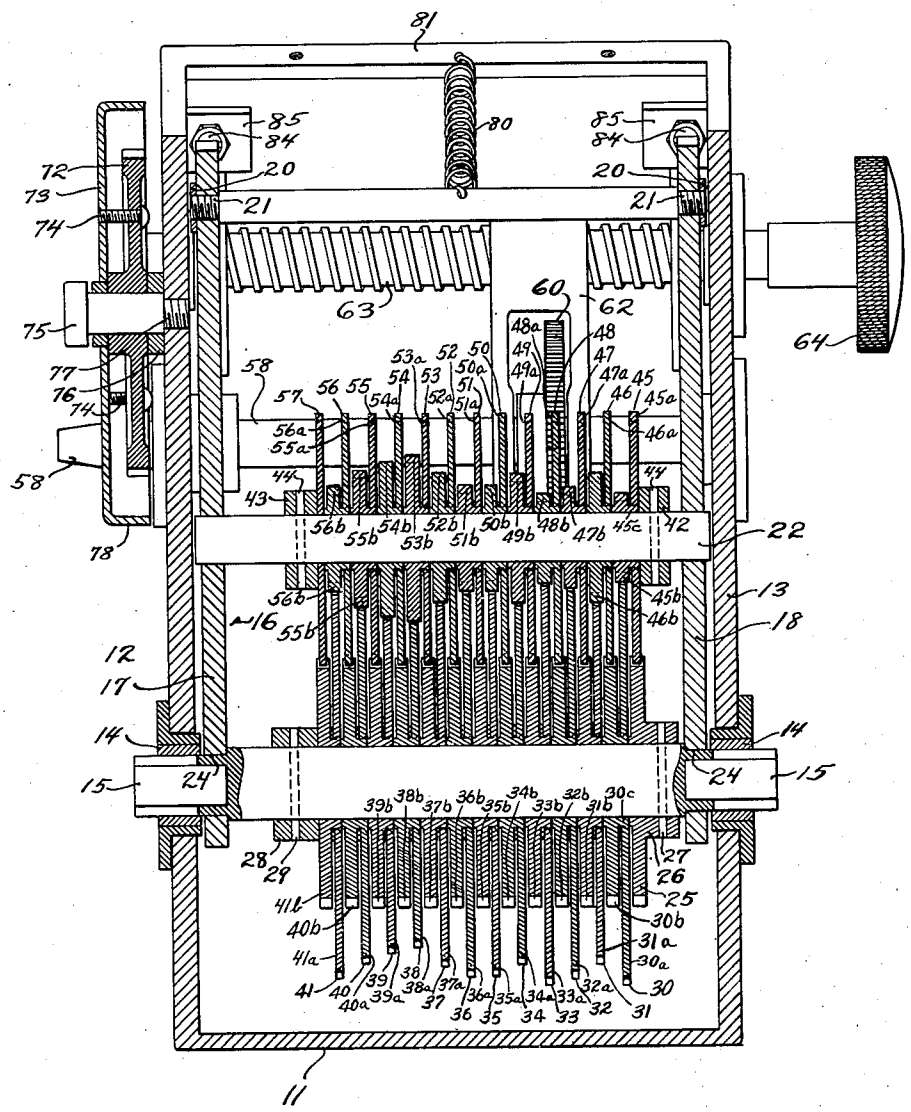

INVENTOR
JOHN ELLISON GORRELL
By Raymond, Carter & Nichols
ATTORNEYS

Oct. 18, 1949. J. E. GORRELL 2,485,151

GEAR-CHANGING DRIVE

Filed Nov. 24, 1945 4 Sheets-Sheet 4

FIG. 6

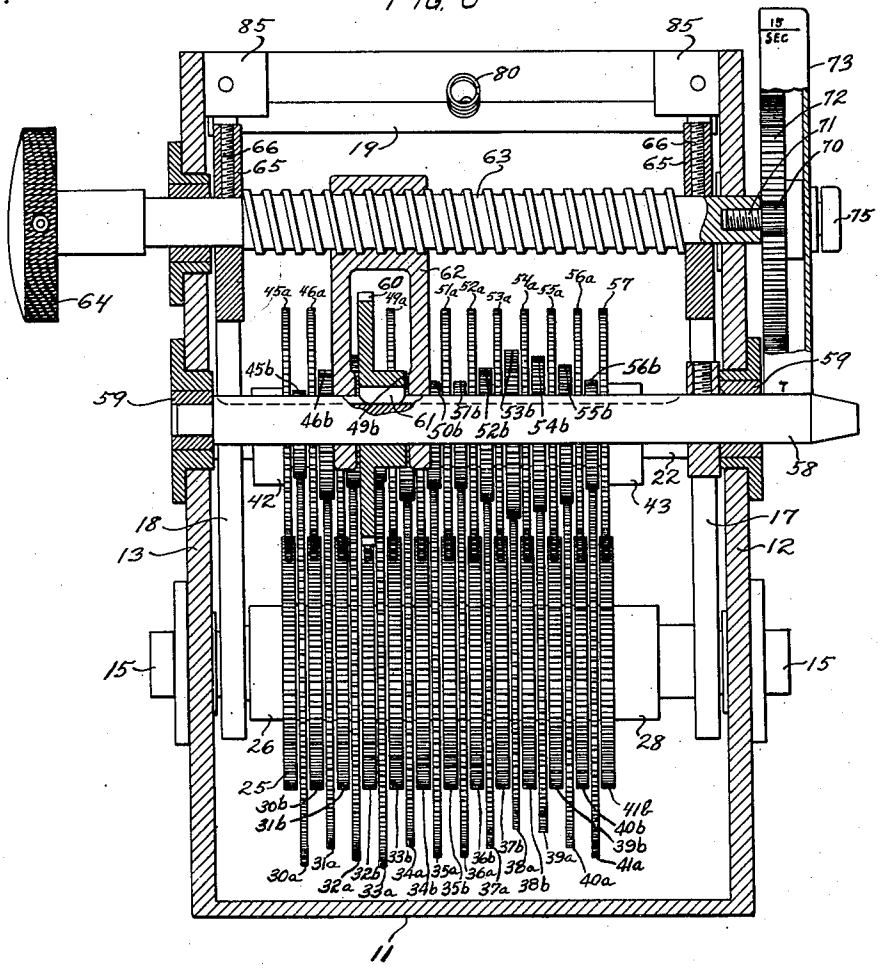

FIG. 9

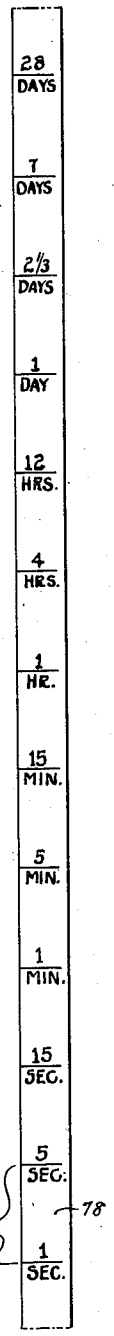

FIG. 7

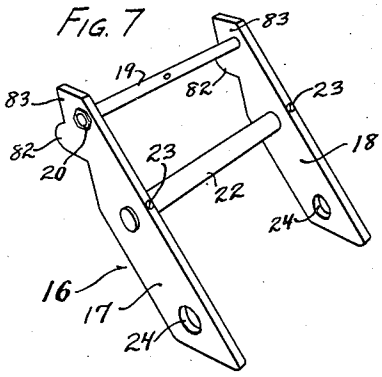

FIG. 8

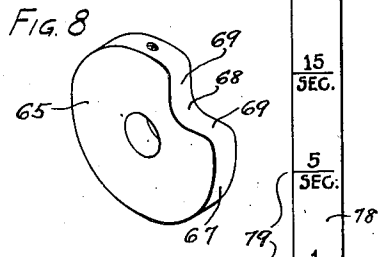

INVENTOR
JOHN ELLISON GORRELL
By Seymour, Earle & Nichols
ATTORNEYS

Patented Oct. 18, 1949 2,485,151

UNITED STATES PATENT OFFICE

2,485,151

GEAR-CHANGING DRIVE

John Ellison Gorrell, Haworth, N. J.

Application November 24, 1945, Serial No. 630,594

12 Claims. (Cl. 74—348)

1

This invention relates to improvements in gear-changing drives.

One object of this invention is to provide an improved gear-changing drive or device which provides a wide range of speeds of the output-shaft of the device.

Another object of this invention is to provide an improved gear-changing drive having an indicator which automatically indicates the changes in speed corresponding to the output-shaft.

Another object of this invention is to provide an improved gear-changing drive formed of simple elements to produce an efficient, durable construction.

With the above and other objects in view, as will appear to those skilled in the art from the present disclosure, this invention includes all features in the said disclosure which are novel over the prior art.

In the description and claims, the various parts and steps are identified by specific terms for convenience, but they are intended to be as generic in their application as the prior art will permit.

In the accompanying drawings forming part of the present disclosure, in which one way of carrying out the invention is shown for illustrative purposes:

Fig. 1 is a top plan view on a reduced scale, illustrating one embodiment of a gear-changing device made in accordance with the present invention;

Fig. 2 is a front elevation of Fig. 1;

Fig. 3 is a full scale plan view similar to Fig. 1, but with the cover-plate removed;

Fig. 4 is a sectional view on line 4—4 of Fig. 3;

Fig. 5 is a sectional view on line 5—5 of Fig. 4;

Fig. 6 is a sectional view on line 6—6 of Fig. 3;

Fig. 7 is a perspective view of the swingable frame;

Fig. 8 is a perspective view of one of the cams of the rotatable shifter-shaft; and

Fig. 9 is a developed plan view of the indicator surface of the indicator-wheel.

Referring to the drawings showing the particular form of the invention chosen for illustration therein, the gear-changing drive or device 10 includes a base in the form of a hollow box 11, in the opposite sides 12 and 13 of which, are secured bushings 14 in which an input or driving-shaft 15 is rotatably mounted.

A swingable frame 16 is formed of two side-bars 17 and 18 which are interconnected at their upper end-portions by a rod or bar 19 which is clamped to the side-bars 17 and 18 by the nuts 20 which are threaded on the threaded ends 21 of the bar 19. The side-bars 17 and 18 are interconnected at their intermediate portion by an intermediate shaft 22 which is secured to the side-bars 17 and 18 by screws 23. The lower ends of the side-bars 17 and 18 of the frame 16 are pivoted at 24 on the shaft 15 to swing about the axis of the shaft 15.

2

A gear 25 has its hub 26 fixedly secured to the shaft 15 adjacent one end, in any suitable way, as for example by a pin 27, and a collar 28 is fixedly secured to the shaft 15 adjacent its other end, by the pin 29. Freely rotatable on the shaft 15 between the gear 25 and the collar 28, are a plurality of pairs of gears or gear pairs 30 to 41 inclusive. The gear pair 30 consists of the two gears 30*a* and 30*b*, the gear 30*a* being fixed non-rotatably relatively to the gear 30*b* in any suitable way, as for example, by being fixedly secured upon the hub-extension 30*c* of the gear 30*b*. In similar manner, each of the other gear pairs 31 to 41 have their respective gears 31*a* to 41*a* respectively non-rotatably connected to the gears 31*b* to 41*b* inclusive. Thus each gear pair 30 to 41 inclusive is free to rotate on the shaft 15 as a unit, independently of each of the other gear pairs on the shaft 15.

Two spaced-apart collars 42 and 43 are fixedly secured to the intermediate shaft 22 by any suitable means, as for example by the pins 44. Freely rotatable on the shaft 22 are a plurality of gear pairs 45 to 56 inclusive, and a single gear 57. The gear pair 45 includes a gear 45*a* secured non-rotatably to the gear 45*b* by being fixedly secured on the hub 45*c* of the gear 45*b*. And the gears of each of the other gear pairs 46 to 56 are similarly connected together. Each of the gear pairs 45 to 56 is freely rotatable on the shaft 22 independently of each other gear pair, and of the single gear 57.

The gear 25 which is secured to the shaft 15, is in driving-relation with the gear 45*a* on the shaft 22, and the other gear 45*b* of the gear pair 45 which is non-rotatable relatively to the gear 45*a*, is in driving-relation with the gear 30*a* of the gear pair 30 on the shaft 15, and the gear 30*b* of the gear pair 30 on the shaft 15 is in driving-relation with the gear 46*a* of the gear pair 46 on the shaft 22, and the drive between the pairs of gears on the shafts 15 and 22 alternates back and forth in the manner just described until finally the gear 41*a* of the last gear pair 41 on the shaft 15 is driven from the gear 56*b* of the gear pair 56 on the shaft 22, and finally the gear 41*b* of the gear pair 41 on the shaft 15 drives the single gear 57 on the shaft 22.

Thus the gear 25 and the gear 45*a* are in meshing or drive-relation with one another, and thus form a pair of meshing or drive-gears. And similarly, each other two meshing gears such for example as the gear 45*b* on the shaft 22 and the gear 30*a* on the shaft 15, are in mesh with each other and thus form a meshing or drive-pair of gears. As each of the *a* gears 45*a* to 56*a* inclusive and the single gear 57 are free to rotate independently of one another on the shaft 22, it will be obvious that by suitably selecting any desired different ratio between the pitch-diameters of any meshing or drive-pair of gears, that any desired range of speeds of rotation, within limits, can be given to the *a* gears 45*a* to 56*a* inclusive and the single gear 57. By having the gear 25 and each of the *b* gears 30*b* to 41*b* inclusive, of the same pitch-diameter, it is possible, and preferable, to have all of the *a* gears 45*a* to 56*a* inclusive and the single gear 57 of a single pitch-diameter, for reasons which will be later explained.

An output or driven-shaft 58 is rotatably mounted in bushings 59 in the side walls 12 and 13 of the box 11, and has a shifter-gear 60 (Fig. 6) splined thereon by the spline 61 so as to be non-rotatable relatively to the shaft 58 but longitudinally slidable thereon. A shifter-arm 62 is longitudinally slidable on the shaft 58, and permits free rotation of the latter shaft 58. The shifter-arm 62 is threadedly engaged with a shifter-screw shaft 63 which is rotatably mounted in the side walls 12 and 13 and carries at its end, an operating hand-grip or knob 64. The shaft 63 is held against longitudinal movement by means of two cam-collars or cams 65 secured to the opposite end portions of the shaft 63 by any suitable means as for example by the screws 66. Each of the cams 65 has its major outer surface portion 67 of cylindrical form and concentric with its axis and with the axis of the shifter-shaft 63. A cam-depression 68 provides two oppositely sloping cam surfaces 69, all for purposes which will hereinafter be described.

A pinion 70 has a screw-threaded shank 71 which is screwed into one end of the shifter-shaft 63. The pinion 70 is in mesh and driving-engagement with a gear 72 (Fig. 3) which is secured to an indicator or indicator-member 73 of cupshape form, by any suitable means as for example by the screws 74. A bearing-screw 75 extends through the members 73 and 72 and a spacer-collar 76, and has its inner threaded end 77 threadedly engaged in the side wall 12.

The outer cylindrical face or surface 78 of the indicator-member 73 can be marked with indicator marks 79 and proper indicator labels or designations as for example those illustrated in Fig. 9, which is a developed view of the surface 78 of the indicator-member 73. The indicator marks 79 are labeled as shown, from one second up to and including 28 days, which labeling will hereinafter be referred to in more detail.

As the frame 16 is pivoted coaxially with the shaft 15, to swing about the shaft 15 from its position illustrated in full lines of Fig. 4 to or beyond its broken-line outline position shown in Fig. 4, the gears on the shaft 22 will always remain in mesh with the meshing gears on the shaft 15, regardless of the rotational or pivoted position of the frame 16. If the shifter-gear shaft 63 is rotated to bring the shifter-gear 60 into planar-alignment with any one of the *a* gears 45*a* to 56*a* or the single gear 57, then if the frame 16 is swung from its broken-line outline position to its full-line position shown in Fig. 4, then such two gears as have been planarly aligned, will be brought into mesh with one another as indicated in full solid lines in Fig. 4. The frame 16 is normally urged or swung toward the left of Fig. 4 by means of a spring 80 secured to the rod or shaft 19 and also secured to a portion 81 of the box 11 (Figs. 3 and 5). When the lugs 82 formed on the side-bars 17 and 18 of the frame 16, are located in the cam-depressions 68, preferably with the upper ends 83 of the side-bars 16 and 17 engaging against limit means such as the screws 84 which are secured in lug-portions 85 of the box 11, then the shifter-gear 59 and the other such gear on the shaft 22 as it is in planar-alignment with, if any, will be brought into mesh with one another as illustrated in solid lines in Fig. 4.

When the hand-knob 64 is rotated either clockwise or anti-clockwise, the shifter-arm 62 is moved in a corresponding longitudinal direction in one direction or the other along the shaft 58, and correspondingly slides the shifter-gear 60 along with it. The construction and arrangement and proportions of all of the parts are such that when the shifter-arm 62 has moved the shifter-gear 60 into substantially planar-alignment with any one of the *a* gears 45*a* to 56*a* inclusive and single gear 57 on the shaft 22, then the cam-depressions 68 will have concurrently arrived at the position illustrated in solid lines in Fig. 4 to thus permit the spring 80 to swing the frame 16 and the bank of gears on the shaft 22 carried by the frame 16, to bring the gear on shaft 22 with which the shifter-gear 60 has been aligned, into mesh or drive-relation. And when the hand-knob 64 is rotated in either direction from the position illustrated in solid lines in Fig. 4, sufficiently to cause one or the other of the oppositely-sloped cam-surfaces 69 to force the lugs 82 of the frame 16 outwardly against the action of the spring 80, to thus move the two gears which were planarly-aligned, apart or out of mesh. Continued rotation of the shaft 63 by means of the knob 64 in either direction, will again bring the cam-depression 68 beneath the lugs 82 when the shifter-gear 60 has again been planarly-aligned in position for meshing, with one of the *a* gears 45*a* to 56*a* inclusive or single gear 57. And each time that the cams 65 are moved to the position shown in solid lines in Fig. 4 to thus permit the meshing action of two planarly-aligned gears, one of the indicator-markings 79 will be brought into indicating position opposite the indicator or arrow-point 86 (Fig. 1), through the action of the gears 70 and 72 (Fig. 3). It will thus be seen that the operation of the parts 68 and 82 is most effectively accomplished for the gears on the intermediate shaft 22 that are meshable with the shifter-gear 60, by having said meshable intermediate-shaft gears all of the same pitch diameter, thus at all times accomplishing proper meshing and proper cooperation of parts 68 and 82 since the swingable frame 16 will always be swung to the same angular position about the shaft 15 to cause meshing with the shifter-gear 60.

In the particular embodiment illustrated in the drawings, the shaft 15 is sometimes referred to herein as the input or driving-shaft, and the shaft 58 is sometimes referred to herein as the output or driven-shaft, but whether the shaft 15 is the driving or driven shaft in a given device, and whether the shaft 58 is correspondingly the driven or driving shaft, each of such shafts is a drive-shaft, and may be so referred to. And

when two shafts, gears, etc., are referred to as being in drive-relation, this expression is intended to not distinguish as to which is the driving and which is the driven member. With any given *a* gear **45***a* to **56***a* or single gear **57**, in mesh with the shifter-gear **60**, these two shafts **15** and **58** will have a certain speed-ratio between them regardless of which is the driving-shaft and which is the driven-shaft. In the particular embodiment illustrated in the drawings, the indicator markings of from one second to twenty-eight days illustrated in Fig. 9, correspond to a rotational speed of the driving-shaft **15**, of sixty revolutions per minute. When the shifter-gear **60** has been planarly-aligned for meshing position with the gear **45***a*, the one-second indicator mark will be indicated by the arrow-point **86**. And correspondingly, when the shifter-gear **60** has been successively shifted further to the right of Fig. 6, as it successively comes in planar-alignment with one and then the other of the successive *a* gears **45***a* to **56***a* inclusive and the single gear **57**, corresponding indicator markings of five seconds, fifteen seconds, one minute, etc., will correspondingly appear opposite the arrow-indicator **86**.

Inasmuch as the shifter-gear **60** is illustrated in the drawings as aligned with the gear **48***a* on the shaft **22**, the indicator-arrow **86** will indicate the one-minute speed of rotation for the output shaft **58**. When the shifter-gear **60** is in drive-relation with the gear **45***a* on the shaft **22**, then if the input shaft **15** rotates once per second or sixty per minute, then the output-shaft **58** will also rotate once per second or sixty per minute, and this is indicated by the one-second indication near the lower end of Fig. 9. And with the same rotational speed of sixty per minute of the input-shaft **15**, if the shifter-gear **59** is in drive-relation with the next gear **46***a* on the shaft **22**, then, with the proportions of the parts illustrated in the drawings, the output-shaft **58** will rotate once in five seconds or one-fifth as fast as the input-shaft **15**, and so on. While the input-shaft **15** can be driven in any suitable way at any suitable speed and by any suitable means, one way in which this can be satisfactorily accomplished is to drive it with an electric-motor having a speed of rotation of, for example, eighteen hundred R. P. M., and reduced by reduction-gearing to a motor output-shaft which rotates at sixty revolutions per minute and which is directly connected to the input-shaft **15** and thereby causes the shaft **15** to rotate at sixty revolutions per minute. Of course, any other speed of rotation desired, could be given to the shaft **15**, the speed of rotation of sixty per minute being merely used as illustrative, and to correspond with the indicator-markings and proportions of the parts as illustrated in the drawings.

When two members such for example as two shafts, are referred to as a first shaft and a second shaft, the sole purpose of use of the terms first and second is to distinguish one shaft from the other.

Gear-changing drives or units made in accordance with the present invention have a very wide range of speed-drives for the output-shaft **58**, as will be evident from Fig. 9, and it gives these rates of one revolution in each of the times indicated in Fig. 9 depending upon the mesh-position of the shifter-gear **60**, with great precision. And, therefore, one use for the present device can be for driving a chart at any one of a predetermined number of a wide range of speeds.

The invention may be carried out in other specific ways than those herein set forth without departing from the spirit and essential characteristics of the invention, and the present embodiments are, therefore, to be considered in all respects as illustrative and not restrictive, and all changes coming within the meaning and equivalency range of the appended claims are intended to be embraced therein.

I claim:

1. A gear-changing drive including: a rotatable driving shaft; a rotatable driven shaft; an intermediate shaft; a driving gear driven by said driving shaft; a first set of independently rotatable pairs of gears on said intermediate shaft, the gears of each pair of a number of said pairs of gears being fixed non-rotatably relatively to one another; a second set of independently rotatable pairs of gears, the gears of each pair being fixed non-rotatably relatively to one another; said driving gear being in driving relation with one gear of a pair of said first set of pairs of gears; one gear of each pair of a number of pairs of said first set of pairs of gears respectively being in driving relation with a gear of each pair of a number of pairs of said second set of pairs of gears, and the other gear of each pair of a number of pairs of said first set of pairs of gears respectively being in driven relation with a gear of each pair of a number of pairs of said second set of pairs of gears; a shifter-gear having driving relation with said driven shaft, and adapted to be selectively engaged with one gear of each pair of a number of pairs of said first set of pairs of gears; said gears being so constructed and arranged that said selective engagement of said shifter-gear with said gears of said first set of pairs of gears, selectively provides different selectable speed-ratios between said driving and driven shafts.

2. A gear-changing drive including: a rotatable driving shaft; a rotatable driven shaft; an intermediate shaft; a driving gear driven by said driving shaft; a first set of independently rotatable pairs of gears on said intermediate shaft, the gears of each pair of a number of said pairs of gears being fixed non-rotatably relatively to one another; a second set of independently rotatable pairs of gears, the gears of each pair being fixed non-rotatably relatively to one another; said driving gear being in driving relation with one gear of a pair of said first set of pairs of gears; one gear of each pair of a number of pairs of said first set of pairs of gears respectively being in driving relation with a gear of each pair of a number of pairs of said second set of pairs of gears, and the other gear of each pair of a number of pairs of said first set of pairs of gears respectively being in driven relation with a gear of each pair of a number of pairs of said second set of pairs of gears; a shifter-gear on and longitudinally slidable but non-rotatable relatively to said driven shaft, and adapted to be selectively engaged with one gear of each pair of a number of pairs of said first set of pairs of gears; said gears being so constructed and arranged that said selective engagement of said shifter-gear with said gears of said first set of pairs of gears, selectively provides different selectable speed-ratios between said driving and driven shafts.

3. A gear-changing drive including: a rotatable driving shaft; a rotatable driven shaft; an intermediate shaft; a driving gear driven by said driving shaft; a first set of independently rotatable pairs of gears on said intermediate shaft, the gears of each pair of a number of said pairs of

gears being fixed non-rotatably relatively to one another; a second set of independently rotatable pairs of gears, the gears of each pair being fixed non-rotatably relatively to one another; said driving gear being in driving relation with one gear of a pair of said first set of pairs of gears; one gear of each pair of a number of pairs of said first set of pairs of gears respectively being in driving relation with a gear of each pair of a number of pairs of said second set of pairs of gears, and the other gear of each pair of a number of pairs of said first set of pairs of gears respectively being in driven relation with a gear of each pair of a number of pairs of said second set of pairs of gears; a shifter-gear on and longitudinally slidable but non-rotatable relatively to said driven shaft; shifter-means adapted to selectively shift said shifter-gear into planar alignment with one gear of each pair of a number of pairs of said first set of pairs of gears, and meshing-means actuated by said shifter-means to cause meshing of said shifter-gear and a gear with which it has been selectively shifted into planar alignment; said gears being so constructed and arranged that said selective engagement of said shifter-gear with said gears of said first set of pairs of gears, selectively provides different selectable speed-ratios between said driving and driven shafts.

4. A gear-changing drive including: a rotatable driving shaft; a rotatable driven shaft; an intermediate shaft; a driving gear driven by said driving shaft; a first set of independently rotatable pairs of gears on said intermediate shaft, the gears of each pair of a number of said pairs of gears being fixed non-rotatably relatively to one another; a second set of independently rotatable pairs of gears, the gears of each pair being fixed non-rotatably relatively to one another; said driving gear being in driving relation with one gear of a pair of said first set of pairs of gears; one gear of each pair of a number of pairs of said first set of pairs of gears respectively being in driving relation with a gear of each pair of a number of pairs of said second set of pairs of gears, and the other gear of each pair of a number of pairs of said first set of pairs of gears respectively being in driven relation with a gear of each pair of a number of pairs of said second set of pairs of gears; a shifter-gear on and longitudinally slidable but non-rotatable relatively to said driven shaft; a rotatably-mounted shifter-shaft; shifter-means engaged with said shifter-shaft and adapted to be moved longitudinally of said shifter-shaft by rotation of said shifter-shaft to selectively shift said shifter-gear into planar alignment with one gear of each pair of a number of pairs of said first set of pairs of gears, and meshing-means actuated by rotation of said shifter-shaft to cause meshing of said shifter-gear and a gear with which it has been selectively shifted into planar alignment; said gears being so constructed and arranged that said selective engagement of said shifter-gear with said gears of said first set of pairs of gears, selectively provides different selectable speed-ratios between said driving and driven shafts.

5. A gear-changing drive including: a rotatable driving shaft; a rotatable driven shaft; an intermediate shaft; a driving gear driven by said driving shaft; a first set of independently rotatable pairs of gears on said intermediate shaft, the gears of each pair of a number of said pairs of gears being fixed non-rotatably relatively to one another; a second set of independently rotatable pairs of gears, the gears of each pair being fixed non-rotatably relatively to one another; said driving gear being in driving relation with one gear of a pair of said first set of pairs of gears; one gear of each pair of a number of pairs of said first set of pairs of gears respectively being in driving relation with a gear of each pair of a number of pairs of said second set of pairs of gears, and the other gear of each pair of a number of pairs of said first set of pairs of gears respectively being in driven relation with a gear of each pair of a number of pairs of said second set of pairs of gears; a shifter-gear on and longitudinally slidable but non-rotatable relatively to said driven shaft; a rotatably-mounted shifter-shaft; shifter-means engaged with said shifter-shaft and adapted to be moved longitudinally of said shifter-shaft by rotation of said shifter-shaft to selectively shift said shifter-gear into planar alignment, with one gear of each pair of a number of pairs of said first set of pairs of gears, and meshing-means actuated by rotation of said shifter-shaft to cause meshing of said shifter-gear and a gear with which it has been selectively shifted into planar alignment; said gears being so constructed and arranged that said selective engagement of said shifter-gear with said gears of said first set of pairs of gears, selectively provides different selectable speed-ratios between said driving and driven shafts; and speed-indicator means actuable by rotation of said shifter-shaft to indicate the speed corresponding to any selectively meshed gears.

6. A gear-changing drive including: a rotatable driving shaft; a rotatable driven shaft; a frame pivoted to swing about an axis co-axial with the axis of said driving shaft; and intermediate shaft mounted in said frame parallel to said driving shaft; a driving gear driven by said driving shaft; a first set of independently rotatable pairs of gears on said intermediate shaft, the gears of each pair of a number of said pairs of gears being fixed non-rotatably relatively to one another; a second set of independently rotatable pairs of gears, the gears of each pair being fixed non-rotatably relatively to one another; said driving gear being in driving relation with one gear of a pair of said first set of pairs of gears; one gear of each pair of a number of pairs of said first set of pairs of gears respectively being in driving relation with a gear of each pair of a number of pairs of said second set of pairs of gears, and the other gear of each pair of a number of pairs of said first set of pairs of gears respectively being in driven relation with a gear of each pair of a number of pairs of said second set of pairs of gears; a shifter-gear on and longitudinally slidable but non-rotatable relatively to said driven shaft; shifter-means adapted to selectively shift said shifter-gear into planar alignment with one gear of each pair of a number of pairs of said first set of pairs of gears, and said frame adapted to be swung to cause a gear on said intermediate shaft which is in planar alignment with said shifter-gear, to mesh with said shifter-gear; said gears being so constructed and arranged that said selective engagement of said shifter-gear with said gears of said first set of pairs of gears, selectively provides different selectable speed-ratios between said driving and driven shafts.

7. A gear-changing drive including: a rotatable driving shaft; a rotatable driven shaft; a frame pivoted to swing about an axis co-axial with the axis of said driving shaft; an intermediate shaft mounted in said frame parallel to said driving

shaft; a driving gear driven by said driving shaft; a first set of independently rotatable pairs of gears on said intermediate shaft, the gears of each pair of a number of said pairs of gears being fixed non-rotatably relatively to one another; a second set of independently rotatable pairs of gears, the gears of each pair being fixed non-rotatably relatively to one another; said driving gear being in driving relation with one gear of a pair of said first set of pairs of gears; one gear of each pair of a number of pairs of said first set of pairs of gears respectively being in driving relation with a gear of each pair of a number of pairs of said second set of pairs of gears, and the other gear of each pair of a number of pairs of said first set of pairs of gears respectively being in driven relation with a gear of each pair of a number of pairs of said second set of pairs of gears; a shifter-gear on and longitudinally slidable but non-rotatable relatively to said driven shaft; a rotatably-mounted shifter-shaft; shifter-means engaged with said shifter-shaft and adapted to be moved longitudinally of said shifter-shaft by rotation of said shifter-shaft to selectively shift said shifter-gear into planar alignment with one gear of each pair of a number of pairs of said first set of pairs of gears, and meshing-means actuated by rotation of said shifter-shaft to cause said frame to be swung toward said shifter-shaft to cause meshing of said shifter-gear and a gear with which it has been selectively shifted into planar alignment; said gears being so constructed and arranged that said selective engagement of said shifter-gear with said gears of said first set of pairs of gears, selectively provides different selectable speed-ratios between said driving and driven shafts.

8. A gear-changing drive including: a rotatable driving shaft; a rotatable driven shaft; a frame pivoted to swing about an axis co-axial with the axis of said driving shaft and normally yieldably urged to swing toward said driven shaft; an intermediate shaft mounted in said frame parallel to said driving shaft; a driving gear driven by said driving shaft; a first set of independently rotatable pairs of gears on said intermediate shaft, the gears of each pair of a number of said pairs of gears being fixed non-rotatably relatively to one another; a second set of independently rotatable pairs of gears, the gears of each pair being fixed non-rotatably relatively to one another; said driving gear being in driving relation with one gear of a pair of said first set of pairs of gears; one gear of each pair of a number of pairs of said first set of pairs of gears respectively being in driving relation with a gear of each pair of a number of pairs of said second set of pairs of gears, and the other gear of each pair of a number of pairs of said first set of pairs of gears respectively being in driven relation with a gear of each pair of a number of pairs of said second set of pairs of gears; a shifter-gear on and longitudinally slidable but non-rotatable relatively to said driven shaft; a rotatably-mounted shifter-shaft; shifter-means engaged with said shifter-shaft and adapted to be moved longitudinally of said shifter-shaft by rotation of said shifter-shaft to selectively shift said shifter-gear into planar alignment with one gear of each pair of a number of pairs of said first set of pairs of gears, and meshing-means actuated by rotation of said shifter-shaft to permit said frame to be yieldably swung toward said driven shaft to cause a gear on said intermediate shaft which is in planar alignment with said shifter-gear to mesh with said shifter-gear; said gears being so constructed and arranged that said selective engagement of said shifter-gear with said gears of said first set of pairs of gears, selectively provides different selectable speed-ratios between said driving and driven shafts.

9. A gear-changing drive including: a rotatable driving shaft; a rotatable driven shaft; a frame pivoted to swing about an axis co-axial with the axis of said driving shaft; an intermediate shaft mounted in said frame parallel to said driving shaft; a driving gear driven by said driving shaft; a first set of independently rotatable pairs of gears on said intermediate shaft, the gears of each pair of a number of said pairs of gears being fixed non-rotatably relatively to one another; a second set of independently rotatable pairs of gears, the gears of each pair being fixed non-rotatably relatively to one another; said driving gear being in driving relation with one gear of a pair of said first set of pairs of gears; one gear of each pair of a number of pairs of said first set of pairs of gears respectively being in driving relation with a gear of each pair of a number of pairs of said second set of pairs of gears, and the other gear of each pair of a number of pairs of said first set of pairs of gears respectively being in driven relation with a gear of each of a number of pairs of said second set of pairs of gears; a shifter-gear on and longitudinally slidable but non-rotatable relatively to said driven shaft; a rotatably-mounted shifter-shaft; shifter-means engaged with said shifter-shaft and adapted to be moved longitudinally of said shifter-shaft by rotation of said shifter-shaft to selectively shift said shifter-gear into planar alignment with one gear of each pair of a number of pairs of said first set of pairs of gears, and meshing-means actuated by rotation of said shifter-shaft to cause said frame to be swung toward said shifter-shaft to cause meshing of said shifter-gear and a gear with which it has been selectively shifted into planar alignment; said gears being so constructed and arranged that said selective engagement of said shifter-gear with said gears of said first set of pairs of gears, selectively provides different selectable speed-ratios between said driving and driven shafts; and speed-indicator means actuable by rotation of said shifter-shaft to indicate the speed corresponding to any selectively meshed gears.

10. A gear-changing drive including: drive-means; a rotatable drive shaft; an intermediate shaft; a plurality of rotatable gears on said intermediate shaft; a shifter-gear on and longitudinally slidable but non-rotatable relatively to said drive-shaft; and shifter-means adapted to selectively shift said shifter-gear into planar alignment with any one of a number of said rotatable gears; said intermediate shaft with said rotatable gears being constructed and arranged to be relatively movable toward said shifter-gear to cause meshing of said shifter-gear and a gear with which it has been selectively shifted into planar alignment; and said drive-means being constructed and arranged to drive said rotatable gears at different speeds when any one of said rotatable gears is in mesh with said shifter-gear.

11. A gear-changing drive including: drive-means; a rotatable drive shaft; an intermediate shaft; a plurality of rotatable gears of the same pitch diameter on said intermediate shaft; a shifter-gear on and longitudinally slidable but non-rotatable relatively to said drive-shaft;

shifter-means adapted to selectively shift said shifter-gear into planar alignment with any one of a number of said rotatable gears; said intermediate shaft with said rotatable gears being constructed and arranged to be relatively movable toward said shifter-gear to cause meshing of said shifter-gear and a gear with which it has been selectively shifted into planar alignment; said drive-means being constructed and arranged to drive said rotatable gears at different speeds when any one of said rotatable gears is in mesh with said shifter-gear; and speed-indicator means actuated by said shifter-means to indicate the speed corresponding to any selectively meshed gears.

12. A gear-changing drive including: a first rotatable shaft; a second rotatable shaft; an intermediate shaft; a drive-gear in drive-relation with said first rotatable shaft; a first set of independently rotatable pairs of gears on said intermediate shaft, the gears of each pair of a number of said pairs being fixed non-rotatably relatively to one another; a second set of independently rotatable pairs of gears, the gears of each pair of a number of said pairs being fixed non-rotatably relatively to one another; said drive-gear being in drive-relation with one gear of a pair of said first set of pairs of gears; one gear of each pair of a number of pairs of said first

set of pairs of gears respectively being in drive-relation with a gear of each pair of a number of pairs of said second set of pairs of gears, and the other gear of each pair of a number of pairs of said first set of pairs of gears respectively being in drive-relation with a gear of each pair of a number of pairs of said second set of pairs of gears; a shifter-gear having drive-relation with said second rotatable shaft, and adapted to be selectively engaged in drive-relation with one gear of each pair of a number of pairs of said first set of pairs of gears; said gears being so constructed and arranged that said selective engagement of said shifter-gear with said gears of said first set of pairs of gears, selectively provides different selectable speed-ratios between said first and second rotatable shafts.

JOHN ELLISON GORRELL.

REFERENCES CITED

The following references are of record in the file of this patent:

UNITED STATES PATENTS

Number	Name	Date
1,508,879	Healey	Sept. 16, 1924
1,967,559	Schreck	July 24, 1934
1,984,039	Sieg	Dec. 11, 1934