2 Sheets—Sheet 1.

R. K. HUNTOON.

APPARATUS FOR REGULATING THE SUPPLY OF STEAM TO GAS-EXHAUSTERS.

No. 194,041. Patented Aug. 14, 1877.

Fig. 1.

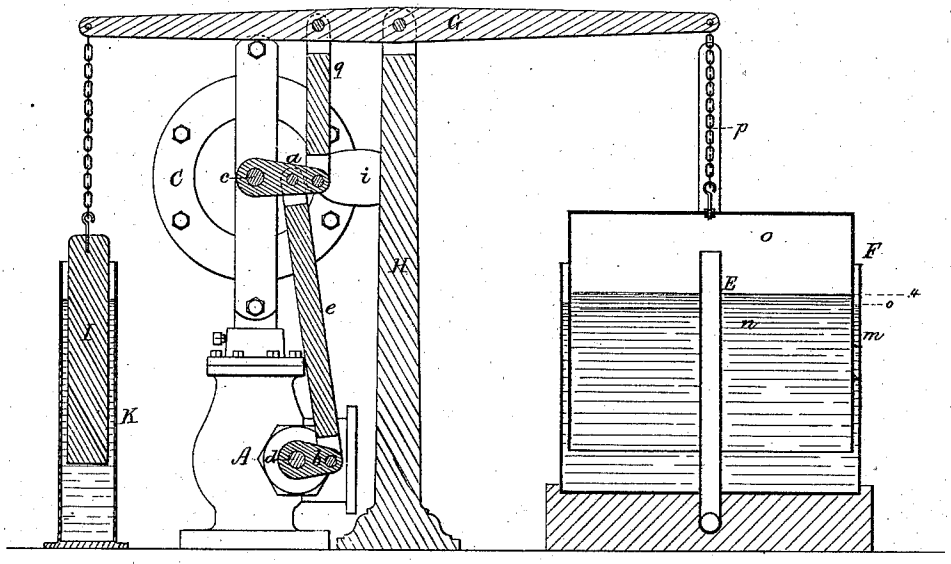

Fig. 2.

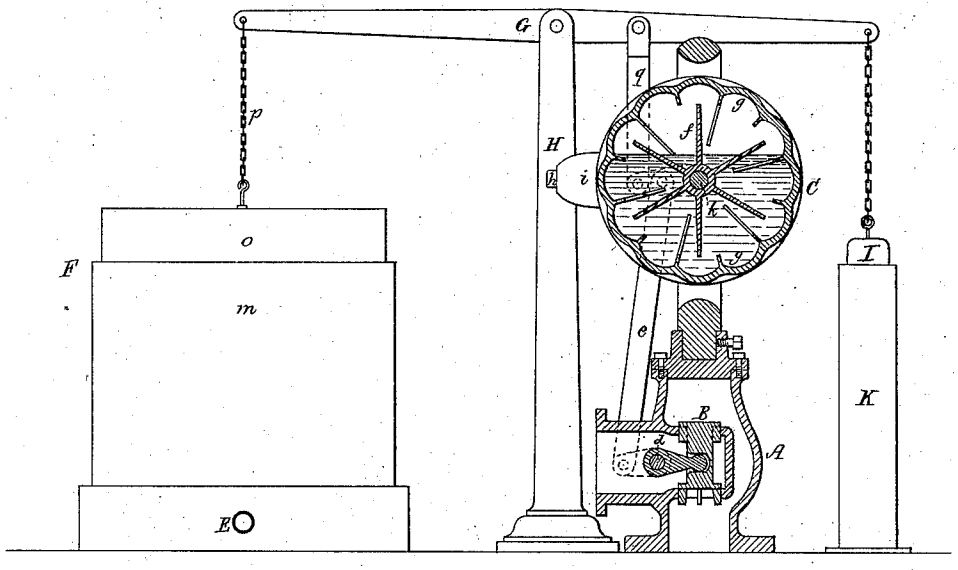

Witnesses.
S. N. Piper
L. A. Müller

Inventor
Reuben K. Huntoon.
by his attorney
R. M. Eddy

N. PETERS, PHOTO-LITHOGRAPHER, WASHINGTON, D. C.

2 Sheets—Sheet 2.

R. K. HUNTOON.

APPARATUS FOR REGULATING THE SUPPLY OF STEAM TO GAS-EXHAUSTERS.

No. 194,041. Patented Aug. 14, 1877.

Fig. 3.

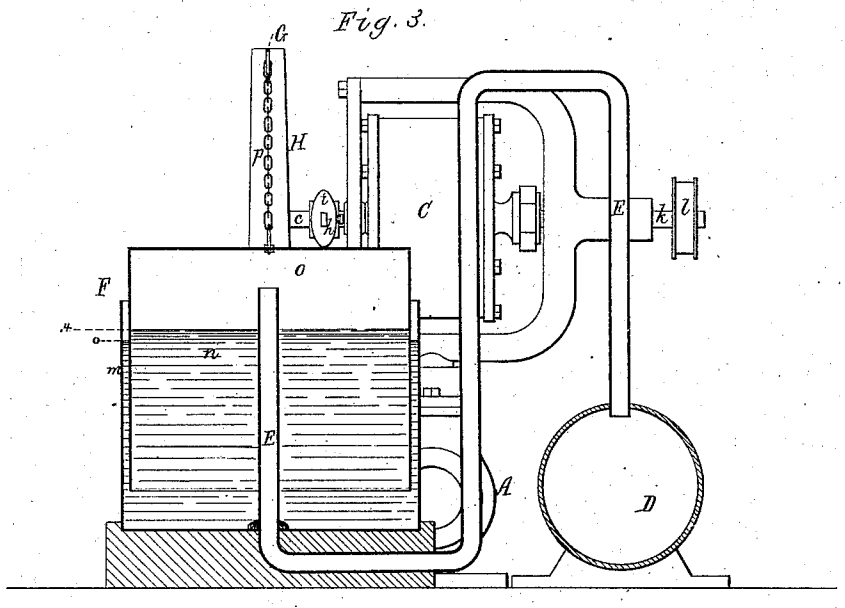

Witnesses.
S. N. Piper
L. W. Möller

Inventor.
Reuben K. Huntoon
by his attorney.
R. K. Eddy

N. PETERS, PHOTO-LITHOGRAPHER, WASHINGTON, D. C.

UNITED STATES PATENT OFFICE.

REUBEN K. HUNTOON, OF WAKEFIELD, ASSIGNOR TO ALLEN GOVERNOR COMPANY, OF BOSTON, MASSACHUSETTS.

IMPROVEMENT IN APPARATUS FOR REGULATING THE SUPPLY OF STEAM TO GAS-EXHAUSTERS.

Specification forming part of Letters Patent No. **194,041**, dated August 14, 1877; application filed February 6, 1877.

To all whom it may concern:

Be it known that I, REUBEN K. HUNTOON, of Wakefield, of the county of Middlesex and State of Massachusetts, have made a new and useful invention for regulating the supply of steam to a steam-engine when used in operating machinery for extracting gas from one or more retorts employed in the production of such gas; and I do hereby declare the same to be fully described in the following specification, and represented in the accompanying drawings, of which—

Figure 1 denotes a vertical section taken through the gasometer and its counter-balancing weight and tank, to be hereinafter described. Fig. 2 is a vertical section of a steam-governor and throttle-valve and case; and Fig. 3, a transverse section of the gasometer and the retort exhaust-pipe, all of which will be hereinafter explained.

My invention consists, first, in the combination of a counter-balance tank and weight with the gasometer and the mechanism for connecting its bell with the throttle-valve; second, in the combination of a steam-engine governor and the gas-exhaust regulator, substantially as described, with the single throttle or supply-pipe valve of a steam-engine, and with the gas-retort exhaust-pipe, all being essentially as hereinafter explained.

In the drawings, A denotes a throttle-valve case, and B the valve of a steam-engine supply-pipe, such valve having applied to it a well-known Allen steam-governor, C, the application being effected by two arms or cranks, *a b*, fixed on the respective shafts *c d* of the governor and valve, and by a connecting-rod, *e*, jointed to such arms or cranks, all being as shown.

The construction and mode of operation of the Allen steam-governor being well and publicly known, need not be herein particularly explained, except that it consists of a paddle-wheel, *f*, arranged within a corrugated case, *g*, having wings on its inner sides and about two-thirds filled with oil. The casing is centered on the spindle or shaft *c*, from which an arm, *h*, provided with an adjustable weight, *i*, extends. The spindle *k* of the paddle-wheel has a pulley, *l*, fixed on it, which is usually run at a speed of about four hundred revolutions per minute by a belt from another pulley driven by the steam-engine.

Furthermore, in the drawings, D denotes the gas-exhaust pipe of one or more retorts. From this pipe a conduit, E, bent, as shown, leads upward within the tank *m* of a gasometer, F, and through and above the charge *n* of water or liquid in such tank. The inverted bell *o* of the gasometer is suspended by a chain, *p*, from a lever, G, having its fulcrum at its middle, and supported by a post, H. By means of a short rod, *q*, the lever is connected with the arm or crank *a*, and also with the throttle-valve spindle by the connecting-rod *e* and arm *b*, hereinbefore explained.

There is suspended from the lever, as shown, a weight, I, to counterbalance the gasometer-bell. This weight I prefer to insert in a tank, K, supplied with water, as by the addition of such tank and its charge of water the counter-balancing of the bell is effected, whatever may be the altitude of the bell in the liquid of its tank.

From the above it will be seen that as the gas may increase in volume or pressure in the exhaust-main, the bell will be forced upward, and consequently the throttle-valve will be moved so as to increase the flowage of steam to the cylinder of the engine, and thereby cause the engine to work faster; an opposite result taking place as the pressure of the gas may diminish in the gasometer-bell.

To prevent any sudden or undue increase or decrease of steam from working the engine to interfere with the correct operations of the exhaust-governor, such governor and the steam-governor are applied to the same throttle-valve. This application or combination of the one throttle-valve and the two governors is also productive of other advantages.

I am aware of the gas-exhaust regulators represented in the United States Patents 63,155 and 119,505, which, in some respects, are analogous to mine, as explained. In them the movement of the float or part to be moved is due to and limited by the differences of level in the liquid effected by the pressure of the gas on such liquid in separate columns—that is, the gas presses on the top of one column and by forcing down such column elevates the other. No such action follows in my exhaust-

governor, the range of movement of whose bell is very much greater, and not dependent on the rise and fall of the water in the tank.

I do not claim the combination of a gasometer, and a counterbalance of its bell, with a steam supply-pipe and its valve, as represented in either of the United States Patents 115,334 or 160,443; therefore,

I claim as my invention as follows—

1. The combination of the counterbalance tank K and weight I with the gasometer-bell *o* and tank applied, as described, to a gas-retort exhaust-pipe, and with mechanism for connecting the said bell with the throttle-valve of the supply-pipe of a steam-engine, and for causing such valve to be governed in its movements by the bell, under circumstances and in manner and for the purpose substantially as set forth, the mechanism, as represented, for connecting the bell *o* and valve B, consisting of the lever G, chain *p*, connecting-rods *e q*, cranks *a b*, and the valve-spindle *d*.

2. The combination, substantially as described, of a steam-engine governor and a gas-exhaust regulator, essentially as explained, with the throttle or valve of the supply-pipe of a steam-engine and with a gas-retort exhaust-pipe, whereby the said valve becomes regulated in its movements for supplying steam to the engine as the varying pressure of the steam or of the gas may require, for the proper extraction of the gas from the retort or retorts.

REUBEN K. HUNTOON.

Witnesses:

R. H. EDDY,

J. R. SNOW.