Sept. 19, 1950 R. HILL 2,522,515

SHOE WITH SECTIONAL OUTSOLE AND FLEXIBLE INSOLE

Filed Dec. 5, 1947 2 Sheets-Sheet 1

Fig. 1.

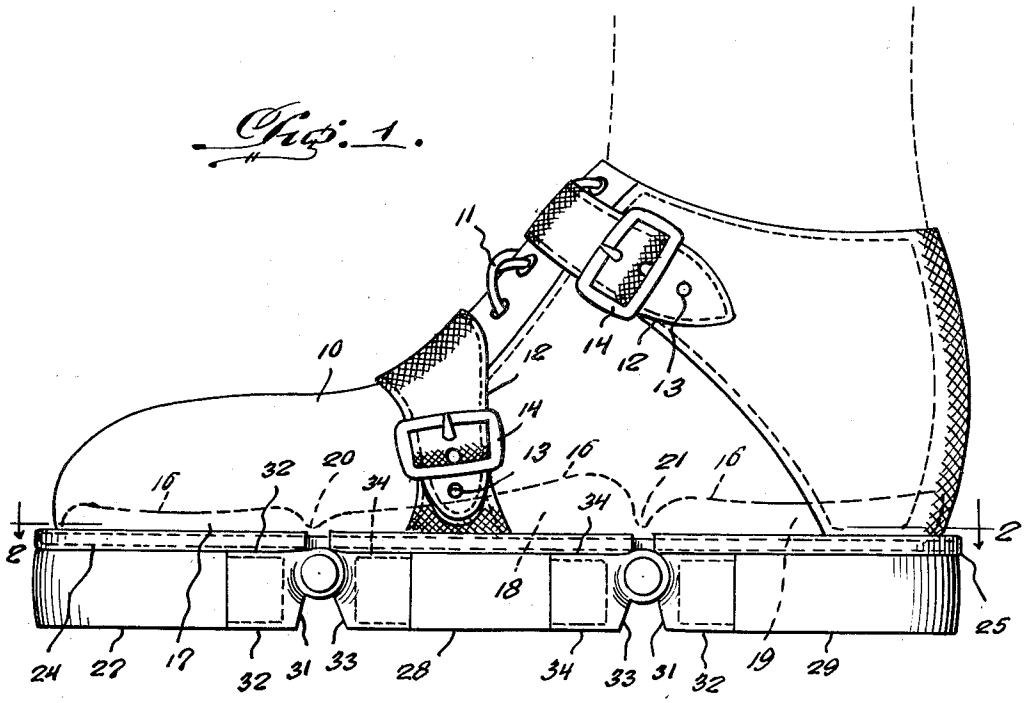

Fig. 2.

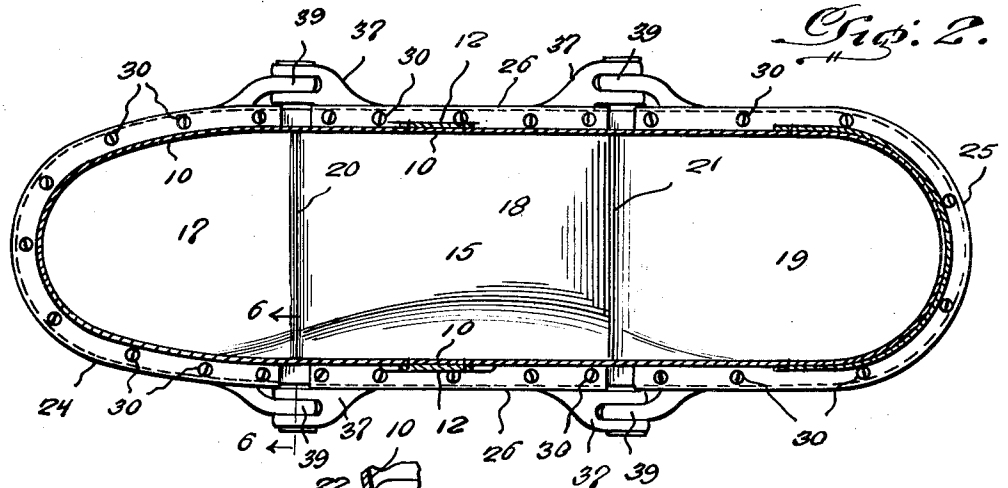

Fig. 6.

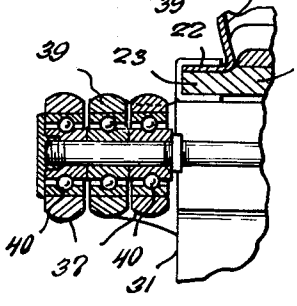

Inventor
Ruth Hill,

By McMorrow, Berman and Davidson
Attorneys

Sept. 19, 1950 R. HILL 2,522,515

SHOE WITH SECTIONAL OUTSOLE AND FLEXIBLE INSOLE

Filed Dec. 5, 1947 2 Sheets-Sheet 2

Fig. 3.

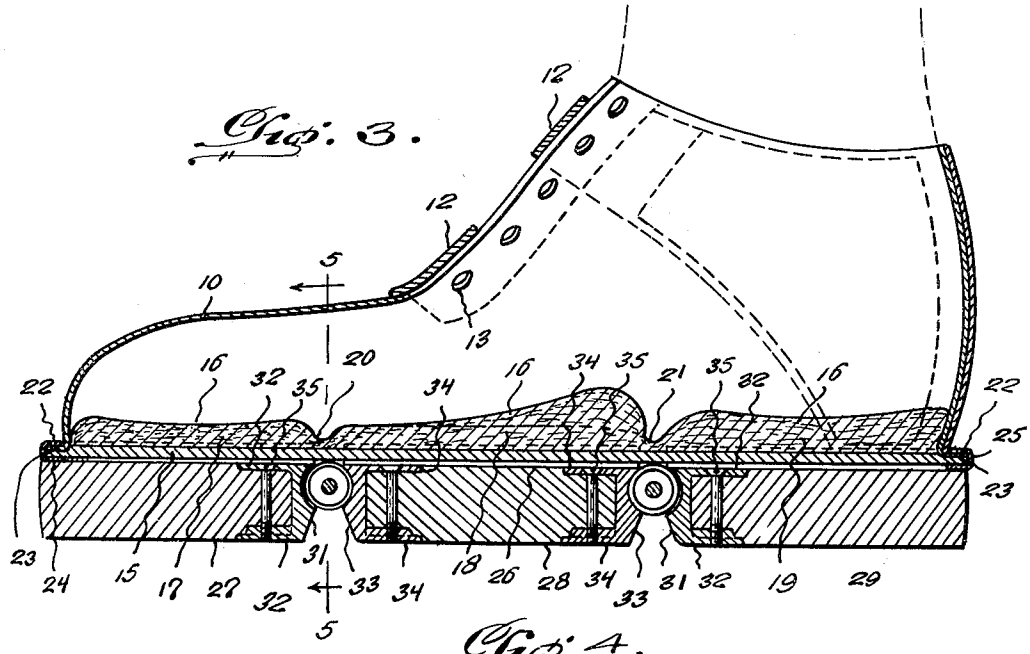

Fig. 4.

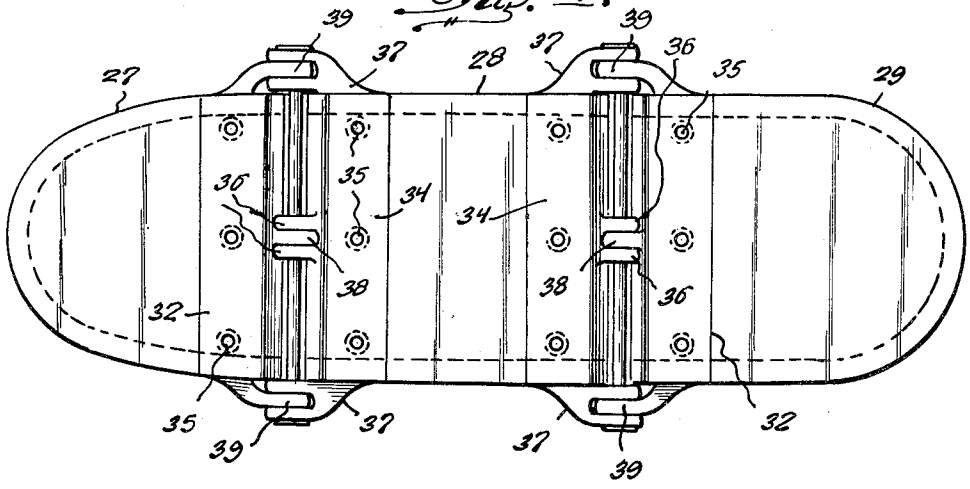

Fig. 5.

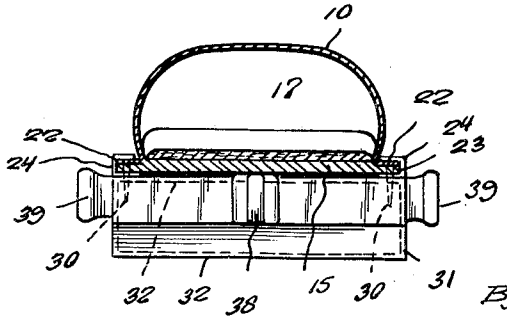

Inventor
Ruth Hill,

By McMorrow, Berman & Davidson

Attorneys

Patented Sept. 19, 1950 2,522,515

UNITED STATES PATENT OFFICE

2,522,515

SHOE WITH SECTIONAL OUTSOLE AND FLEXIBLE INSOLE

Ruth Hill, Taft, Okla.

Application December 5, 1947, Serial No. 789,993

2 Claims. (Cl. 36—2.5)

1

My invention relates to shoes and more particularly to shoes provided with specially constructed soles.

The object of my invention is to provide a shoe having a sole consisting of sections extending transversely of the shoe.

Another object of the invention is to provide a shoe having a sole consisting of sections extending transversely of the shoe and being connected hingedly with each other.

A further object of the invention is to provide a shoe having transversely extending, hingedly connected sole sections which are made from wood, metal, plastic or any other suitable strong and wear resisting material.

Other objects of the invention may appear in the following specification describing my invention with reference to the accompanying drawings illustrating a preferred embodiment of my invention.

It is however to be understood, that my invention is not to be limited and restricted to the exact construction and combination of parts described in the specification and shown in the drawings, but that such changes and modifications can be made which fall within the scope of the claims appended hereto.

In the drawings:

Figure 1 is a side elevational view of a shoe according to my invention.

Figure 2 is a sectional view taken on line 2—2 in Figure 1.

Figure 3 is a vertical longitudinal sectional view of the shoe shown in Figure 1.

Figure 4 is a bottom plan view of Figure 1.

Figure 5 is a sectional view taken on line 5—5 in Figure 3, and

Figure 6 is a sectional detail view taken on line 6—6 in Figure 2.

Referring now in detail to the drawings the shoe according to my invention has an upper structure 10 of conventional design or construction and made from any desired and suitable material, such as leather, canvas or the like.

The shoe can be fastened to the foot of a wearer by means of shoe laces 11 and straps 12 provided with holes 13 and buckles and tongues 14. It is however to be noted that either the straps 12 or the laces 11 alone may be used for the purpose of securing the shoe to the foot.

An inner sole 15 may be fastened in any convenient manner to the upper structure and is provided with padding for comfort as indicated at 16. The inner sole 15 has a forward portion 17 supporting the toes and the ball of the foot, a

2

central portion 18 supporting the arch of the foot and a rear portion 19 supporting the heel of the foot. Between the front portion 17 and the middle portion 18 and between the middle portion 18 and the rear portion 19 the inner sole 15 is provided with zones of reduced thickness as indicated at 20 and 21 respectively to increase the flexibility of the sole, and these zones extend transversely of the inner sole.

The rim portion 22 of the upper structure 10 is bent outwardly to form a flange resting on the circumferential portion 23 of the inner sole 15.

A connecting member 24 has a channel shaped cross section and is formed to extend around the toe portion of the shoe back to the flexing zone 20 of the inner sole. Another connecting member 25 of similar construction is arranged at the heel end of the shoe and extends forwardly to the flexing zone 21 of the inner sole 15. On each side of the shoe a connecting member 26 having a channel-shaped cross section extends between the flexing zones 20 and 21 of the inner sole 15.

The superimposed rim portions 22 and 23 of the upper structure 10 and the inner sole 15 respectively are located inside the connecting members between the flanges thereof.

The sole of the shoe according to my invention is preferably made from wood, metal, plastic or any other suitable wear resisting material and consists of a toe supporting portion 27, an arch supporting portion 28 and a heel supporting portion 29.

The arch supporting sole portion 28 extends between the two flexing zones 20 and 21 respectively of the inner sole 15, the toe supporting portion 27 is arranged in front of the arch supporting portion and the heel supporting portion 29 in the rear thereof.

A plurality of screws 30 extends through the several connecting members 24, 25, and 26, and the superimposed rim portions 22 and 23 of the upper structure 10 and the inner sole 15 and into the respective sole portions 27, 28 and 29 firmly connecting the several parts forming the shoe.

The several sole portions 27, 28 and 29 are connected hingedly with each other.

On the inner ends of the toe and heel portions 27 and 29 respectively of the sole a bracket 31 having a channel-shaped cross section is fastened. Each bracket 31 has a top and a bottom flange 32 extending transversely of the sole portion and set into recesses in the sole portions provided for this purpose, so that the upper and lower

surfaces of the brackets 31 are level with the upper and lower surfaces of the sole portions.

The arch supporting sole portion 28 is provided at both of its ends with a channel-shaped bracket 33 having upper and lower flanges 34 set into recesses extending transversely to the arch supporting sole portion 28.

All the brackets 31 and 33 are securely attached to the sole portions by means of a plurality of countersunk screws 35.

Each bracket 33 on the arch supporting sole portion 28 has on its longitudinal center a pair of outwardly extending, spaced apart lugs 36 and on each lateral end a bifurcated laterally and outwardly extending arm 37.

Each bracket 31 has an inwardly extending lug 38 located between the oppositely located pair of lugs 36 and on each of its lateral ends an inwardly extending lug 39 arranged in the oppositely located bifurcation of an arm 37. All the lugs 36, 38 and 39 and the prongs on the bifurcated arms 37 are rounded off and provided with a centrally located bore, in each of which a ball bearing 40 is arranged and a shaft 41 extends through each set of aligned ball bearings whereby the toe supporting and heel supporting sole portions are hingedly connected with the arch supporting sole portion.

Since the hinge connections of the sole are arranged directly underneath the flexing zones of the inner soles, and since the connecting members are divided right above the hinge connections a comfortable, easily flexible shoe is provided.

Having described my invention I claim as new and desire to secure by Letters Patent:

1. A shoe comprising an upper having a flexible inner-sole, an outer-sole underlying said inner-sole and secured thereto, said outer-sole comprising a pair of end sections arranged in end-to-end spaced relation with respect to each other, an intermediate section interposed in the space between said end sections and having each of its ends pivotally connected to the adjacent end of said end sections, said end and intermediate sections being of the same height and fabricated of inflexible material, and a padding co-extensive with and secured to said inner-sole, said padding having transversely-extending areas of reduced cross-section overlying the pivotally connected ends of said sections offering reduced resistance to flexing of said inner-sole in the regions of said pivotally connected ends of said sections as the latter are moved relative to each other.

2. A shoe comprising an upper having a flexible inner-sole, an outer-sole underlying said inner-sole and secured thereto, said outer-sole comprising a pair of end sections arranged in end-to-end spaced relation with respect to each other, an intermediate section interposed in the space between said end sections, hinge means extending between the facing ends of said end and intermediate sections and connected thereto, said hinge means comprising interlocking lugs carried by the facing ends of said end and intermediate sections and a pin extending through said interlocking lugs, and a padding co-extensive with and secured to said inner-sole, said padding having transversely-extending areas of reduced cross-section overlying the pivotally connected ends of said sections offering reduced resistance to the flexing of said inner-sole in the region of said pivotally connected ends of said sections as the latter are moved relative to each other.

RUTH HILL.

REFERENCES CITED

The following references are of record in the file of this patent:

UNITED STATES PATENTS

Number	Name	Date
1,341,498	Demarmals	May 25, 1920
2,340,027	Story	Jan. 25, 1944
2,368,960	Anson	Feb. 6, 1945
2,435,668	Behringer	Feb. 10, 1948

FOREIGN PATENTS

Number	Country	Date
79,059	Switzerland	Mar. 1, 1939
189,623	Great Britain	Dec. 7, 1922
413,853	Germany	May 18, 1925
621,643	France	Feb. 12, 1927