United States Patent [19]

Nishigaki

[11] **Des. 250,474**

[45] ** **Dec. 5, 1978**

[54] **VIDEO TAPE CASSETTE**

[75] Inventor: **Koichi Nishigaki**, Yokohama, Japan

[73] Assignee: **Victor Company of Japan, Limited**, Yokohama, Japan

[**] Term: **14 Years**

[21] Appl. No.: **789,373**

[22] Filed: **Apr. 20, 1977**

[51] **Int. Cl.** ..... **D14—01**
[52] **U.S. Cl.** **D14/11**
[58] **Field of Search** ..... D14/11, 6; 242/197, 242/198, 200, 68, 71, 77; 274/11; 352/72-78 C; 360/93-96, 132-134

[56] **References Cited**

U.S. PATENT DOCUMENTS

D. 223,739	5/1972	Weiss	D87/1 D
D. 227,675	7/1973	Takanashi et al.	D14/11
D. 228,789	10/1973	Koni	D14/11
D. 245,418	8/1977	Katayama et al.	D14/6
3,850,512	11/1974	Scholz	352/78 R X
3,900,172	8/1975	Kamaya	242/198

Primary Examiner—Bernard Ansher
Attorney, Agent, or Firm—Richard C. Sughrue

[57] **CLAIM**

The ornamental design for a video tape cassette, as shown.

DESCRIPTION

FIG. **1** is a front, top and right side perpsective view of a video tape cassette showing my new design;
FIG. **2** is a rear, bottom and left side perspective view; and
FIG. **3** is a bottom plan view thereof.

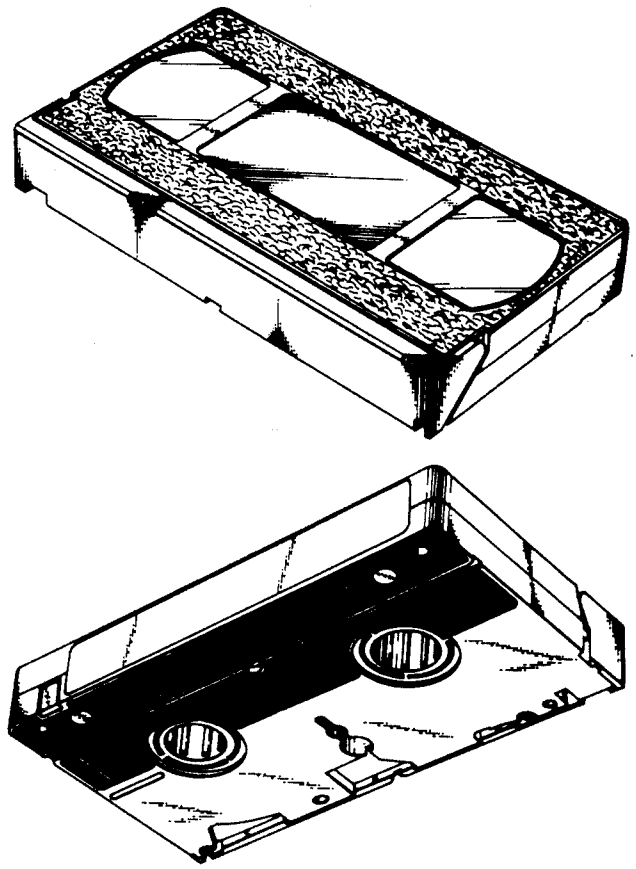

Fig. 1

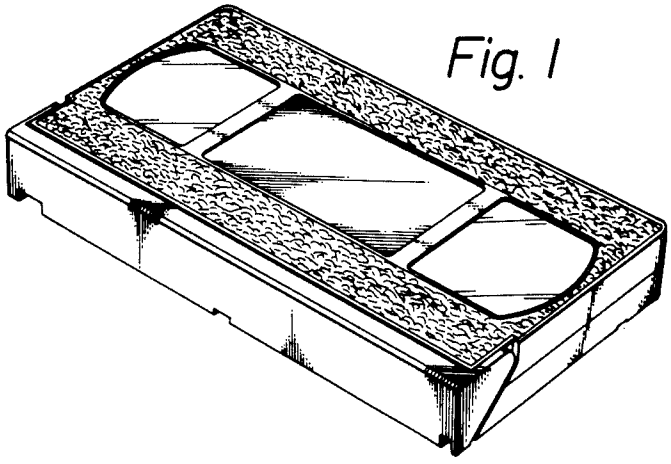

Fig. 2

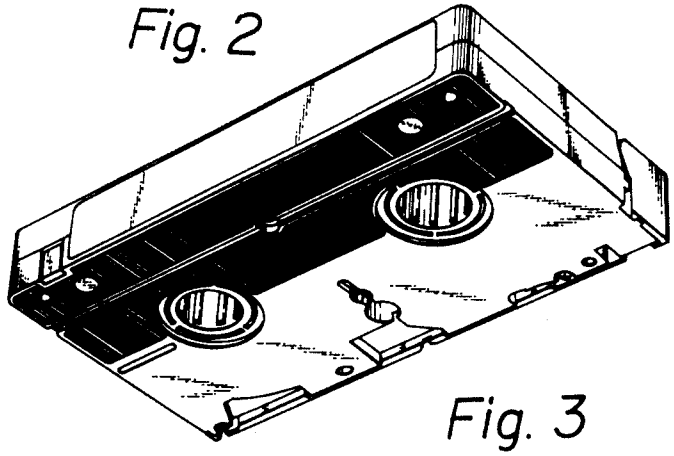

Fig. 3

