(12) STANDARD PATENT (11) Application No. **AU 2018326832 B2**
(19) AUSTRALIAN PATENT OFFICE

(54) Title
Push-to-fit earplug with tip cavity

(51) International Patent Classification(s)
A61F 11/08 (2006.01) ***A61F 11/06*** (2006.01)
A61B 7/02 (2006.01) ***G10K 11/00*** (2006.01)
A61F 11/00 (2006.01) ***H04R 25/00*** (2006.01)

(21) Application No: **2018326832** (22) Date of Filing: **2018.08.30**

(87) WIPO No: **WO19/043627**

(30) Priority Data

(31) Number	(32) Date	(33) Country
62/553,596	**2017.09.01**	**US**

(43) Publication Date: **2019.03.07**
(44) Accepted Journal Date: **2021.01.21**

(71) Applicant(s)
3M Innovative Properties Company

(72) Inventor(s)
COFFIN, Robert C.;STONEBRAKER Jr., Matthew V.;ELY, Jacob H.;HAMER, Jeffrey L.;TEETERS, Kenneth F.;THOMAS, Ravi

(74) Agent / Attorney
FPA Patent Attorneys Pty Ltd, ANZ Tower 161 Castlereagh Street, Sydney, NSW, 2000, AU

(56) Related Art
US 20150335490 A1
US 20090321176 A1
US 20140230830 A1

(12) INTERNATIONAL APPLICATION PUBLISHED UNDER THE PATENT COOPERATION TREATY (PCT)

(19) World Intellectual Property Organization
International Bureau

(43) International Publication Date
07 March 2019 (07.03.2019)

WIPO | PCT

(10) International Publication Number
WO 2019/043627 A2

(51) International Patent Classification:
A61F 11/14 (2006.01)

(21) International Application Number:
PCT/IB2018/056648

(22) International Filing Date:
30 August 2018 (30.08.2018)

(25) Filing Language: English

(26) Publication Language: English

(30) Priority Data:
62/553,596 01 September 2017 (01.09.2017) US

(71) Applicant: **3M INNOVATIVE PROPERTIES COMPANY** [US/US]; 3M Center, Post Office Box 33427, Saint Paul, Minnesota 55133-3427 (US).

(72) Inventors: **COFFIN, Robert C.**; 3M Center, Post Office Box 33427, Saint Paul, Minnesota 55133-3427 (US). **STONEBRAKER, Matthew V. Jr.**; 3M Center, Post Office Box 33427, Saint Paul, Minnesota 55133-3427 (US). **ELY, Jacob H.**; 3M Center, Post Office Box 33427, Saint Paul, Minnesota 55133-3427 (US). **HAMER, Jeffrey L.**; 3M Center, Post Office Box 33427, Saint Paul, Minnesota 55133-3427 (US). **TEETERS, Kenneth F.**; 3M Center, Post Office Box 33427, Saint Paul, Minnesota 55133-3427 (US). **THOMAS, Ravi**; 3M Center, Post Office Box 33427, Saint Paul, Minnesota 55133-3427 (US).

(74) Agent: **EHRICH, Dena M.**, et al.; 3M Center, Office of Intellectual Property Counsel, Post Office Box 33427, Saint Paul, Minnesota 55133-3427 (US).

(81) Designated States *(unless otherwise indicated, for every kind of national protection available)*: AE, AG, AL, AM, AO, AT, AU, AZ, BA, BB, BG, BH, BN, BR, BW, BY, BZ, CA, CH, CL, CN, CO, CR, CU, CZ, DE, DJ, DK, DM, DO, DZ, EC, EE, EG, ES, FI, GB, GD, GE, GH, GM, GT, HN, HR, HU, ID, IL, IN, IR, IS, JO, JP, KE, KG, KH, KN, KP, KR, KW, KZ, LA, LC, LK, LR, LS, LU, LY, MA, MD, ME, MG, MK, MN, MW, MX, MY, MZ, NA, NG, NI, NO, NZ, OM, PA, PE, PG, PH, PL, PT, QA, RO, RS, RU, RW, SA, SC, SD, SE, SG, SK, SL, SM, ST, SV, SY, TH, TJ, TM, TN, TR, TT, TZ, UA, UG, US, UZ, VC, VN, ZA, ZM, ZW.

(84) Designated States *(unless otherwise indicated, for every kind of regional protection available)*: ARIPO (BW, GH, GM, KE, LR, LS, MW, MZ, NA, RW, SD, SL, ST, SZ, TZ, UG, ZM, ZW), Eurasian (AM, AZ, BY, KG, KZ, RU, TJ, TM), European (AL, AT, BE, BG, CH, CY, CZ, DE, DK, EE, ES, FI, FR, GB, GR, HR, HU, IE, IS, IT, LT, LU, LV, MC, MK, MT, NL, NO, PL, PT, RO, RS, SE, SI, SK, SM,

(54) Title: PUSH-TO-FIT EARPLUG WITH TIP CAVITY

(57) Abstract: An earplug comprises a core and a sound-attenuating body attached to the core, the sound- attenuating body comprising a tip cavity extending proximally from the tip of the sound-attenuating body and comprising a distal opening. The tip cavity side wall includes a plurality of protrusions extending inwardly toward the longitudinal axis of the core. The plurality of protrusions may include from 2 to 12 protrusions. A method of making an earplug includes covering at least a portion of a core with a material including unactivated foaming agent; inserting an end of the core and at least a portion of the material into a mold cavity; and activating the foaming agent to create a sound-attenuating body. The sound- attenuating body has a base, tip, and tip cavity with a plurality of protrusions. The mold cavity may include a boss with a cup and plurality of cut-outs on the cup for forming the protrusions.

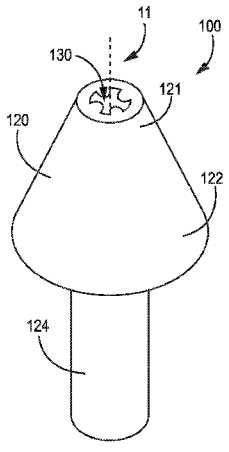

FIG. 1

WO 2019/043627 A2

[Continued on next page]

TR), OAPI (BF, BJ, CF, CG, CI, CM, GA, GN, GQ, GW, KM, ML, MR, NE, SN, TD, TG).

Declarations under Rule 4.17:

— *as to applicant's entitlement to apply for and be granted a patent (Rule 4.17(ii))*

— *as to the applicant's entitlement to claim the priority of the earlier application (Rule 4.17(iii))*

Published:

— *without international search report and to be republished upon receipt of that report (Rule 48.2(g))*

— *in black and white; the international application as filed contained color or greyscale and is available for download from PATENTSCOPE*

1002933173

26 Feb 2020

2018326832

PUSH-TO-FIT EARPLUG WITH TIP CAVITY

The present disclosure relates to hearing protection devices, e.g., push-to-fit earplugs, and methods of manufacturing the hearing protection devices.

The use of hearing protective and noise attenuating devices is well known, and various types of devices have been considered. Such devices include earplugs and semi-aural devices partially or completely constructed of foam or rubber materials that are inserted into, or placed over, the ear canal of a user to physically obstruct the passage of sound waves into the inner ear.

Compressible or "roll-down" type earplugs generally comprise a compressible, resilient body portion and may be made of suitable slow recovery foam materials. The earplug may be inserted into the ear canal of a user by first rolling it between fingers to compress the body portion, then pushing the body portion into the ear canal, and subsequently allowing the body portion to expand to fill the ear canal.

Push-to-fit type earplugs have also been considered, and may include a compressible attenuating portion and a stiff portion (e.g., a stem) that extends from the attenuating portion. To insert a push-to-fit type earplug, the user grasps the stiff portion and pushes the attenuating portion into the ear canal with an appropriate level of force. The attenuating portion compresses as it is accommodated in the ear canal. Push-to-fit earplugs may allow the earplug to be quickly and easily inserted in an ear canal, and may promote hygiene by minimizing contact with the attenuating portion of the earplug prior to insertion.

Reference to any prior art in the specification is not an acknowledgement or suggestion that this prior art forms part of the common general knowledge in any jurisdiction or that this prior art could reasonably be expected to be combined with any other piece of prior art by a skilled person in the art.

SUMMARY

Hearing protection devices, e.g., push-to-fit earplugs, having a tip cavity in the sound-attenuating body and methods of manufacturing the hearing protection devices are described herein.

The tip cavities in the earplugs according to an embodiment may, in one or more embodiments, provide a volume into which the surrounding material of the sound-attenuating body can collapse as the earplug is advanced into an ear canal and/or is resident therein. This feature may,

2018326832 26 Feb 2020

in one or more embodiments, make insertion of the earplugs easier and/or improve comfort, particularly for users with smaller ear canals.

In addition to providing a volume for the material of the sound-attenuating body to occupy, the end of a core located in the earplug may be recessed into the tip cavity, which may, in one or more embodiments, reduce the likelihood that a user will feel the end of the core as the sound-attenuating body is inserted into and/or resident within an ear canal. Although the end of the core is recessed within the tip cavity, it may, in one or more embodiments, extend into the tip cavity such that the end of the core is located above the bottom of the tip cavity according to an embodiment.

According to a first aspect of the invention, there is provided an earplug comprising a core comprising a proximal end, a distal end, and a major outer surface and a longitudinal axis extending from the proximal end to the distal end; a sound-attenuating body attached to the major outer surface of the core, the sound-attenuating body comprising a base and a tip, the distal end of the core disposed within the sound-attenuating body and the tip extending distally beyond the distal end of the core; and a tip cavity of the sound-attenuating body extending proximally from the tip and comprising a distal opening, the tip cavity having a volume defined by a side wall formed by the sound-attenuating body and a bottom at least partially formed by the distal end of the core. The tip cavity side wall comprises a plurality of protrusions extending inwardly toward the longitudinal axis.

In some embodiments, the plurality of protrusions may include from 2 to 12 protrusions. In some embodiments, each of the of protrusions has a proximal end that contacts the distal end of the core.

According to a second aspect of the invention, there is provided a method of making an earplug comprises covering at least a portion of a major outer surface of a core that comprises a first material with a second material that comprises an unactivated foaming agent, the core comprising a proximal end, a distal end, and a major outer surface and a longitudinal axis extending from the proximal end to the distal end; inserting the distal end of the core and at least a portion of the second material into a mold cavity; and activating the unactivated foaming agent in the mold cavity to form a sound-attenuating body in the mold cavity that is attached to the major outer surface of the core. The sound-attenuating body comprises a base and a tip, the distal end of the core disposed within the sound-attenuating body and the tip extending distally beyond the distal end of the core; and a tip cavity of the sound-attenuating body extending proximally from the tip and comprising a distal opening, the tip cavity having a volume defined by a side wall formed by the sound-attenuating

2018326832 26 Feb 2020

body and a bottom at least partially formed by the distal end of the core. The tip cavity side wall comprising a plurality of protrusions extending inwardly toward the longitudinal axis.

In some embodiments, a boss extends into the mold cavity, wherein the boss is positioned to contact the first end of the core when the first end of the core is inserted into the mold cavity. The boss may comprise a cup extending axially from a base of the mold, and a plurality of cut-outs on the cup for forming the protrusions of the tip cavity.

The above summary is not intended to describe each embodiment or every implementation of the earplugs and methods of manufacturing earplugs according to an embodiment. Rather, a more complete understanding of the invention will become apparent and appreciated by reference to the following Detailed Description and claims in view of the accompanying figures.

BRIEF DESCRIPTION OF DRAWINGS

FIGURE 1 is a perspective view of a push-to-fit earplug including a tip cavity according to an illustrative embodiment.

FIGURE 2 is an end view of the earplug of FIGURE 1 taken from the end of the earplug containing the tip cavity.

FIGURE 3 is a cross-sectional view of the earplug of FIGURE 1 and taken along line 3-3 in FIGURE 2.

FIGURE 4 is a perspective view of the earplug of FIGURE 1 with a portion of the earplug cut off.

FIGURE 5 A is a side view of the earplug of FIGURE 1.

FIGURES 5B and 5C are cross-sectional views of the earplug of FIGURE 1 taken along lines B-B and C-C, respectively, in FIGURE 5A.

FIGURE 6 is a perspective view of a push-to-fit earplug including a tip cavity according to an alternative embodiment.

FIGURE 7 is an end view of the earplug of FIGURE 6 taken from the end of the earplug containing the tip cavity.

FIGURE 8 is a cross-sectional view of the earplug of FIGURE 6 and taken along line 7-7 in FIGURE 7.

FIGURE 9 is a perspective view of the earplug of FIGURE 6 with a portion of the earplug cut off.

FIGURE 10 is a perspective view of one illustrative embodiment of a pre-form that includes a core and an outer layer in an intermediate state of one illustrative embodiment of a method of making an earplug according to an embodiment.

FIGURE 11 is a schematic representation of one illustrative embodiment of a manufacturing process according to an embodiment.

FIGURES 12A and 12B are cross-sectional views of one illustrative embodiment of a method of using a mold to manufacture an earplug according to an embodiment.

FIGURE 13 is a perspective view of a mold piece for making the earplug of FIGURE 1.

FIGURE 14 is a perspective view of a mold piece for making the earplug of FIGURE 6.

FIGURE 15 is a cross-sectional view of a push-to-fit earplug including a tip cavity according to an alternative embodiment.

DETAILED DESCRIPTION

The present disclosure relates to earplugs, and more specifically to push-to-fit earplugs that include a comfort cavity (e.g., a tip cavity) at the distal tip of the earplug.

The term "mold" means a hollow form that may or may not impart a shape on a component placed in the hollow form.

The term "thermally bonded" means a state in which molecules of two materials or surfaces have diffused into the material or surface of the other when in a molten phase such that a bond is formed. Chemical bonding is absent or does not provide the primary source of bonding between thermally bonded materials or surfaces.

The term "thermoplastic" means a polymer that can be repeatedly heated and re-shaped and will retain its shape upon cooling.

As used here, the term "comprises" and variations thereof do not have a limiting meaning where these terms appear in the description and claims. Such terms will be understood to imply the inclusion of a stated step or element or group of steps or elements but not the exclusion of any other step or element or group of steps or elements. By "consisting of" is meant including, and limited to, whatever follows the phrase "consisting of." Thus, the phrase "consisting of" indicates that the listed elements are required or mandatory, and that no other elements may be present. By "consisting essentially of" is meant including any elements listed after the phrase, and limited to other elements that do not interfere with or contribute

to the activity or action specified in the disclosure for the listed elements. Thus, the phrase "consisting essentially of" indicates that the listed elements are required or mandatory, but that other elements are optional and may or may not be present depending upon whether or not they materially affect the activity or action of the listed elements.

The words "preferred" and "preferably" refer to embodiments of the disclosure that may afford certain benefits, under certain circumstances. However, other embodiments may also be preferred, under the same or other circumstances. Furthermore, the recitation of one or more preferred embodiments does not imply that other embodiments are not useful, and is not intended to exclude other embodiments from the scope of the disclosure.

In this application, terms such as "a," "an," and "the" are not intended to refer to only a singular entity, but include the general class of which a specific example may be used for illustration. The terms "a," "an," and "the" are used interchangeably with the term "at least one." The phrases "at least one of" and "comprises at least one of" followed by a list refers to any one of the items in the list and any combination of two or more items in the list.

As used here, the term "or" is generally employed in its usual sense including "and/or" unless the content clearly dictates otherwise. The term "and/or" means one or all of the listed elements or a combination of any two or more of the listed elements.

As used here, all numbers are assumed to be modified by the term "about" and in certain situations, preferably, by the term "exactly." As used herein in connection with a measured quantity, the term "about" refers to that variation in the measured quantity as would be expected by the skilled artisan making the measurement and exercising a level of care commensurate with the objective of the measurement and the precision of the measuring equipment used. Herein, "up to" a number (e.g., up to 50) includes the number (e.g., 50).

As used here, the recitations of numerical ranges by endpoints include all numbers subsumed within that range as well as the endpoints (e.g., 1 to 5 includes 1, 1.5, 2, 2.75, 3, 3.80, 4, 5, etc.).

Reference throughout this specification to "one embodiment," "an embodiment," "certain embodiments," or "some embodiments," etc., means that a particular feature, configuration, composition, or characteristic described in connection with the embodiment is included in at least one embodiment of the invention. Thus, the appearances of such phrases in various places throughout this specification are not necessarily referring to the same embodiment of the invention. Furthermore, the particular features, configurations, compositions, or characteristics may be combined in any suitable manner in one or more embodiments.

Relative terms such as proximal, distal, left, right, forward, rearward, top, bottom, side, upper, lower, horizontal, vertical, and the like may be used in this disclosure to simplify the description, however, and not to limit the scope of the invention in any way. Terms such as left, right, forward, rearward, top, bottom, side, upper, lower, horizontal, vertical, and the like are from the perspective observed in the particular figure.

The terms "minor cross dimension" and "minor radius" are used here to refer to the smallest cross dimension/radius of an object, the smallest cross dimension/radius being the shortest length that passes through/from the center of the object in the plane where the cross dimension/radius is being measured.

The terms "major cross dimension" and "major radius" are used here to refer to a dimension of the object that is in the same plane as the minor cross dimension/radius. The major cross dimension and major radius are greater than the minor cross dimension and minor radius, respectively.

The present disclosure relates to earplugs that provide hearing protection for a user, and to methods of making earplugs. In one or more embodiments, the earplugs include a relatively stiff core covered, directly or indirectly, by a relatively soft outer layer. The outer layer forms a compressible sound-attenuating body that may be inserted into the ear canal of a user. The earplugs may also include a stem portion that may include the relatively soft outer layer over the core, with the stem portion intended to be grasped by the user during insertion and removal of the earplug. In one or more embodiments, the earplug may be inserted into an ear canal without first requiring that the sound-attenuating body be compressed or "rolled down."

One or more embodiments of methods of making earplugs are also described. In one or more embodiments, the methods may reduce the difficulty and/or the cost of manufacturing earplugs. The methods may include covering a substrate, such as a core, with an outer layer that includes an unactivated foaming agent, and activating the foaming agent such that at least a portion of the outer layer expands into a desired shape. The methods may further include using a boss or a pin during the expansion of the outer layer to form a cavity inside the tip of the earplug.

FIGURES 1-4 depict one illustrative embodiment of a push-to-fit earplug **100**. The earplug **100** includes a core **110** made of a first material and having proximal and distal ends **111** and **112** (respectively). The proximal end **111** extends into the stem portion **124** of the earplug **100**, and the distal end **112** extends into the sound-attenuation body **120** of the earplug **100**. The earplug **100** further includes an outer layer made of a second material and bonded, directly or indirectly, to at least a portion of outer major surface of the core **110**. The outer layer of second material may be used to form a sound-attenuating body **120** and may also be used to form an outer layer **127** of stem portion **124** extending from the sound-attenuating body **120**.

The sound-attenuating body **120** is configured for at least partial insertion into the ear canal of a user to attenuate the passage of sound into the ear canal. Although not necessarily required, the stem portion **124** may, in one or more embodiments, have a smaller diameter than the sound-attenuating body **120**. During insertion of earplug **100** into the ear canal, the stem portion **124** serves as a handle which may be gripped by a user. Earplug **100**, and specifically sound-attenuating body **120**, is brought proximate to the user's ear and inserted into the ear canal. Sound-attenuating body **120** compresses as it is positioned, and the core **110** provides sufficient stiffness to facilitate insertion. In use, sound-attenuating body **120** is positioned substantially within the ear canal to block the passage of sound and stem portion **124** extends outwardly from the ear canal to provide a handle for removing the earplug.

In one or more embodiments of earplugs, such as earplug **100, 100'** depicted in FIGURES 1-9, the sound-attenuating body **120** includes a tip **121** and a base **122**. The tip **121** of the sound-attenuating body **120** extends distally from the base **122** and the distal end **112** of the core **110**. The core **110** may, in one or more embodiments (such as that depicted in FIGURES 1-9), extend into the sound-attenuating body **120**.

One or more embodiments of the earplugs may include a sound-attenuating body **120** in which the base **122** of the sound-attenuating body **120** is wider than the tip **121** of the sound-attenuating body **120**. Width, as used in this description, is measured in a dimension transverse to the longitudinal axis **11** that extends through the proximal end **111** and distal end **112** of the core **110**.

In one or more embodiments of the earplugs, the sound-attenuating body **120** may include a flange **125** extending proximally and outwardly from the base **122** of the sound-attenuating body **120**. The flange **125** may be formed by a flange cavity **126** formed in the sound-attenuating body **120**. In one or more embodiments, the flange cavity **126** may be described as opening downward, away from the tip **121** of the sound-attenuating body **120**. As a result, the flange **125** is essentially cantilevered from the sound-attenuating body **120**.

The sound-attenuating bodies of the earplugs according to an embodiment include a tip cavity **130** that extends from the tip **121** of the sound-attenuating body **120** towards a bottom **133**. The tip cavity **130** may, in one or more embodiments, provide a volume into which the surrounding material of the sound-attenuating body **120** can collapse as the earplug **100** is advanced into an ear canal and/or is resident therein. The distal end **112** of the core **110** is recessed into the tip cavity **130** which may reduce the likelihood that a user will feel the distal end **112** of the core as the sound-attenuating body **120** is inserted into and/or resident within an ear canal. In one or more embodiments, all or a portion of the distal end **112** of the core **110** may be exposed within the tip cavity **130**. In one or more alternative embodiments, the distal end **112** of the core **110** may be partially or completely covered by a layer of the material used to form the sound-attenuating body **120**.

Although the illustrative embodiment of tip cavity **130** and a distal end **112** of core **110** are depicted as having circular cross-sectional shapes (as seen in, e.g., FIGURE 2), in one or more alternative embodiments, the tip cavities and/or proximal ends of the cores used in earplugs according to an embodiment may have any suitable shape, e.g., hexagonal, pentagonal, octagonal, triangular, square, etc.

The tip cavity **130** has a depth **D130** and a volume **V130**, defined by a side wall **135** formed by the sound-attenuating body and the bottom **133** that may be at least partially formed by the distal end **112** of the core **110**. According to an embodiment, the tip cavity side wall **135** defines a plurality of protrusions **30** extending inwardly toward the center of the tip cavity (toward the longitudinal axis **11**), as shown in FIGURES 1-9.

Although the figures depict an embodiment with four protrusions **30**, the tip cavity **130** may include any suitable number of protrusions **30**, including odd and even numbers, such as from 2 to 12, from 3 to 10, or from 4 to 8 protrusions **30**.

The protrusions **30** have a proximal end **31** and a distal end **32**, with the proximal end **31** disposed at or adjacent the bottom **133** of the tip cavity 130, and a length **L30** extending between the proximal and distal ends **31**, **32**. The protrusions **30** may define pillars such that the length of each pillar extends in a plane with the longitudinal axis **11**. The protrusion **30** may be angled inward such that the distal ends **32** of the protrusions **30** may be closer together than the proximal ends **31**.

The plurality of protrusions **30** may be integrally formed with the sound-attenuating body **120**, and may form a portion of the sound-attenuating body **120**. In some embodiments, the protrusions **30** extend distally from the bottom **133** of the tip cavity **130**. For example, the proximal ends **31** of the protrusions **30** may contact the distal end **112** of the core **110**. The proximal end **31** of each protrusion **30** may be thermally bonded to the distal end **112** of the core **110**. The proximal end **31** of each protrusion **30** may also be bonded chemically (e.g., by covalent bonds) or by surface bonding (e.g., by dipolar interactions, van der Waals forces, or hydrogen bonding) to the distal end **112** of the core **110**.

When viewed in a cross-sectional plane perpendicular to the longitudinal axis **11** (see FIGURES 5A-5C), the tip cavity **130** has a first cross-sectional area **A131** at a first cross-sectional plane (FIGURE 5B) and a second cross sectional area **A132** at a second cross-sectional plane (FIGURE 5C). The first cross-sectional plane is taken along a line at or adjacent the distal end **112** of the core **110** which may form at least a part of the bottom **133** of the tip cavity **130**. The second cross-sectional plane is taken along a line at or adjacent the distal opening **134** of the tip cavity **130**.

Referring now to FIGURE 5B, the tip cavity **130** has a minor radius **R33** that extends from the center of the tip cavity **130** (the longitudinal axis **11**) to the apex **33** of a protrusion **30** in the first cross-sectional plane. The tip cavity **130** also has a major radius **R135** that extends from the center to the wall **135** between two adjacent protrusions **30**. The tip cavity **130** also has a first major cross dimension **D131** determined as the largest cross dimension of the tip cavity in the plane. For example, in some embodiments (e.g., where there are an even number of protrusions), the first major cross dimension **D131** may be determined as two times the major radius **R135**. In some embodiments, the minor radius **R33** is from about 15 to about 85 %, from about 20 to about 75 %, or from about 25 to about 65 % of the major radius **R135**.

At the second cross-sectional plane, shown in FIGURE 5C, the tip cavity **130** has a second major cross dimension **D132**, determined as the largest cross dimension of the tip cavity **130** in that plane. In some embodiments, the first major cross dimension **D131** is greater than the second major cross dimension **D132**. For example, the second major cross dimension **D132** may be from about 5 to about 80 %, from about 10 to about 60 %, or from about 20 to about 50 % of the first major cross dimension **D131**.

The distal end **112** of the core **110**, which may form a portion of the bottom **133** of the tip cavity **130**, has a cross dimension **D112**. For example, the distal end **112** of the core **110** may form a first portion of the bottom **133** of the tip cavity **130**, and the sound-attenuating portion **120** may form a second portion of the bottom **133**. A portion or all of the distal end **112** of the core may be exposed (e.g., visible) at the bottom **133** of the tip cavity **130**. Further, the distal end **112** of the core may extend distally beyond the second portion of the bottom **133** formed by the sound-attenuating portion **120**. Further, the distal end

112 of the core **110** may have a non-planar distal surface, such as a convex, curved surface. The core **110** has a cross-section that may be uniform at any location between the proximal end **111** and the distal end **112** of the core **110**, or may vary along the length of the core **110** (e.g., be narrower at one end than the other).

In some embodiments, the cross dimension **D112** of the distal end **112** of the core **110** is smaller than the first major cross dimension **D131** of the tip cavity **130**. For example, the cross dimension **D112** may be about 50 % or more of the first major cross dimension **D131**, or about 70 % or more, about 80 % or more, or about 90 % or more of the first major cross dimension **D131**. In some embodiments, the cross dimension **D112** may be up to 100 %, up to 110 %, or up to 120 % of the first major cross dimension **D131**. The cross dimension **D112** of the distal end **112** of the core **110** may also be greater than the second major cross dimension **D132** of the tip cavity **130** (i.e., greater than the size of the distal opening of the tip cavity **130**).

The tip cavity **130** has a depth **D130** extending parallel to the longitudinal axis **11** from the proximal-most point of the bottom **133** to the distal opening **134**. The depth **D130** may range from about 2.5 to about 10 mm, from about 3.8 to about 8.3 mm, or from about 4.7 to about 6.3 mm. The sound-attenuating body **120** has an axial length **L120**, and the depth **D130** of the tip cavity **130** may range from about 10 to about 65 %, from about 20 to about 60 %, or from about 30 to about 50 % of the axial length **L120** of the sound-attenuating body **120**.

The sound-attenuating body **120** has a volume that is defined as a volume occupied by the material that makes up the sound-attenuating body **120**. In some embodiments, the tip cavity **130** has a volume **V130** that is from about 1 to about 10 %, from about 2 to about 7, or from about 3 to about 5 % of the volume of the sound-attenuating body **120**.

In some embodiments, the protrusions **30** disposed in the tip cavity **130** have a length **L30** that extends from the bottom **133** of the tip cavity **130** to the distal opening **134** of the tip cavity **130**. The plurality of protrusions **130** may be visible through the distal opening **134** of the tip cavity **130**. In an alternative embodiment, shown in FIGURES 6-9, the protrusions **30'** extend only part of the way toward the distal opening **134**, having a length **L30'** that is shorter than the depth **D130** of the tip cavity **130**. For example, in the alternative embodiment, shown in FIGURES 6-9, the length **L30'** may be from about 14 to about 95 %, from about 16 to about 80 %, from about 18 to about 60 %, or from about 20 to about 50 % of the depth **D130** of the tip cavity **130**.

According to an embodiment, the protrusions **30** occupy a volume within the tip cavity **130**. If compared to the same tip cavity without protrusions, the plurality of protrusions **30** occupies from about 5 to about 60 %, from about 7 to about 55 %, from about 15 to about 55 %, or from about 25 to about 60 % of the volume of the tip cavity **130** measured without the plurality of protrusions. The tip cavity volume measured without the plurality of protrusions may range from about 0.02 cm^3 to about 0.2 cm^3, or from about 0.04 cm^3 to about 0.1 cm^3.

The specific outer shape of the sound-attenuating body **120** is not particularly limited, and the illustrative embodiments depicted in FIGURES 1-9 are only examples of potentially suitable shapes for

an earplug in accordance with the present disclosure. For example, the shape of the sound-attenuating body **120** could be more or less pointed, or more or less rounded, and the sides of the outer surface of the sound-attenuating body **120** could be more or less angled.

Another variation of the earplug **200** shown in FIGURE 15 is that the core **210** includes a channel **213** that extends through the core **210** between the proximal end **211** and the distal end **212**. The core **210** may be surrounded by an outer layer **227**, which may include the same material as the sound-attenuating body **220**. The channel **213** may extend through the bottom **233** of the tip cavity **230** and be open into the tip cavity **230**. The protrusions **20** and the channel **213** may be sized and positioned such that the protrusions **20** contact the core material surrounding the channel **213** at the distal end **212**. The earplug **200** may otherwise be similar to the embodiments discussed above, including a sound-attenuating body **220** with a tip **221** and a base **222**, and optionally a flange **225** and flange cavity **226**. Earplugs according to an embodiment that include channels passing through the earplug may be manufactured such that components of a receiver or of a communication system may be attached to the earplug. Alternatively, or in addition, a channel (such as, e.g., channel **213**) may accommodate one or more filters or other passive hearing elements to provide an attenuation curve having a desired shape. For example, filters positioned in channel **213** may cause nonlinear attenuation of high level impulses produced by explosions, gunfire, or the like. Channels provided in one or more embodiments of earplugs according to an embodiment may also provide a recess that a cord may be attached to, such that first and second earplugs may be joined, or that ends of a headband may be attached to in a semi-aural hearing protector.

The core **110** and the sound-attenuating body **120** may be constructed from any suitable materials. The core **110** may be constructed of a first material and the sound-attenuating body **120** may be constructed of a second material. The second material may be different from the first material, and/or may have a degree of foaming that is different from the first material.

The core material may be selected to provide a substrate onto which an outer layer of material may be provided and that may facilitate insertion of earplugs into the ear canal of a user. In the illustrative embodiment depicted in FIGURES 1-9, core **110** is made of a first material that exhibits greater rigidity or stiffness than the second material used to form the sound-attenuating body **120** (and, in the depicted embodiment, an outer layer **127** of the stem portion **124**), yet is soft enough to be comfortable and safe for a user. In one or more embodiments, the first material of the core **110** may be different than the material used to form the sound-attenuating body **120** and the outer layer **127** of the stem portion **124**. In one or more alternative embodiments, the first material of the core **110** may be the same material chemically, but may be formed or provided in a manner that results in different stiffness between the first material and the second material (e.g., by virtue of density, hardness, etc.).

The core material may provide a sufficiently stiff stem portion **124** so that earplug **100** may be positioned at least partially in the ear of a user without the need to first compress or "roll down" sound-attenuating body **120**. In one or more embodiments, the core **110** may also exhibit an appropriate level of flexibility such that it may slightly deform to follow the contours of the ear canal when positioned there.

The core **110** may be made from one or more materials that can suitably bond to, and are otherwise compatible with, the material used to form the sound-attenuating body **120**. In one or more embodiments, core **110** is made from a first material that includes thermoplastics. Suitable exemplary materials include homopolymers and copolymers of polypropylene, and blends of polypropylene and styrene-ethylene-butylene-styrene (SEBS), such as TUFPRENE™ available from S&E Specialty Polymers, LLC of Lunenburg, MA. Other potentially suitable materials include SANTOPRENE™ 101-90, available from Exxon Mobil Corporation in Irving, TX, and other materials exhibiting appropriate stiffness such that the sound-attenuating body **120** of earplug **100** may be easily inserted into the ear canal of a user.

The core material may be selected such that the core **110** exhibits a desired stiffness. For example, the material can be selected to have a specified flexural modulus. In certain embodiments, at least a portion of the core **110** has flexural modulus from about 0.3 to about 4 GPa. A desired hardness may depend on the dimensions of core **110** such that the core **110** exhibits a desired stiffness. Although the illustrative embodiment of core **110** shows only a single material, one or more alternative embodiments of cores used in earplugs according to an embodiment may include multiple layers to provide one or more desired characteristics.

The sound-attenuating body **120** may be constructed of a second material that may include a cellular material (e.g., a foam) that includes a plurality of cells formed or contained within the material. The same material may also form an outer layer of the stem portion of the earplug according to an embodiment. The cells may contain a gas (e.g., air) and may be formed by any suitable process.

The second material may be a soft and pliable foam, rubber, polymer, or other suitable material that may be comfortably positioned in an ear canal of a user. In some embodiments, the second material is initially a pre-mixture of material that during the making of the earplug is foamed to form the sound-attenuating body. The same material may also form a portion (e.g., an outer layer) of the stem. The stem portion may be foamed to a lesser degree (i.e., higher density), or may not be foamed at all. Examples of suitable materials for the second material include thermoplastics, thermoplastic elastomers, partial thermosets, thermoset polymers, and combinations thereof. For example, the second material may include styrene-ethylene-butylene-styrenes (SEBS), such as MONPRENE MP1900 available from Teknor Apex of Pawtucket, RI. Other suitable materials include plasticized polyvinyl chloride, ethylene propylene diene monomer (EPDM) rubber, styrene butadiene rubber (SBR), butyl rubber, natural rubbers, other thermoplastics, thermoset polymers, and other suitable materials as known in the art that can be formulated to exhibit an appropriate hardness range.

In one or more embodiments, the first and second materials may be selected such that the primary source of bonding between the core and material used for the sound-attenuating body (directly or indirectly) is thermal bonding. For example, in one embodiment the sound-attenuating body is thermally bonded to the outer surface of the core or the stem. In one or more embodiments, an additional adhesive is not required to bond the core to the sound-attenuating body and, as a result, an adhesive is not present between core and the sound-attenuating body. In some embodiments, the earplug is free of adhesives.

Although the sound-attenuating bodies of earplugs may be described as being constructed of a second material, in one or more embodiments the sound-attenuating bodies may be constructed of multiple layers of the same or different materials (which may, e.g., be arranged concentrically). For example, a first layer may be used to provide desired characteristics for contacting an ear canal of a user and a second layer may be used to facilitate a robust bond with the core, while one or more additional layers may be used to provide other desired characteristics.

The second material used in the sound-attenuating body may be selected to control the friability of the outer surface of the sound-attenuating body such that it may not easily be broken or disintegrate during use. The friability of an earplug may be controlled in part by selecting a material having an appropriate molecular weight, with higher molecular weight generally resulting in a less friable earplug. In an exemplary embodiment, an outer layer of the sound-attenuating body includes an SEBS having a molecular weight between 100,000 Daltons and 200,000 Daltons, as measured by gel permeation chromatography analysis as known in the art, such as according to ASTM D6474-99.

The density of the second material (e.g., an outer layer of the sound-attenuating body) can be controlled during manufacturing to provide a specified density as desired for a particular application. The second material may, for example, exhibit a density that varies by thickness such that the second material used in the sound-attenuating body has an integral outer skin that is denser than the second material located closer to the core. Such a skin may be present on one or both of sound-attenuating body and the stem portion (where the stem portion includes, for example, a layer of the second material used in the sound-attenuating body). Alternatively, the second material may have a substantially uniform density.

In one or more embodiments in which the stem portion includes a layer of the second material used in the sound-attenuating body and, the second material of the sound-attenuating body may have a first average density $\rho 1$ and the second material in the outer layer of the stem portion may have a second average density $\rho 2$. First and second average densities $\rho 1$ and $\rho 2$ can be found by averaging the densities at each location of sound-attenuating body or outer layer of stem portion. Without being bound by theory, the average density is believed to provide an indication of the ability of sound-attenuating body or outer layer of stem portion to compress or otherwise conform when subjected to an external force. The first average density $\rho 1$ of a sound-attenuating body may, in one or more embodiments, be selected such that a sound-attenuating body may provide a comfortable fit by conforming to the ear canal of a user, while providing a desired level of sound attenuation. In various illustrative embodiments, the first average density $\rho 1$ of the second material in a sound-attenuating body, comprising a foamed SEBS for example, is between 100 kg/m^3 and 300 kg/m^3, 150 kg/m^3 and 250 kg/m^3, or may be about 200 kg/m^3. The second average density $\rho 2$ of the second material in the outer layer of stem portion may be greater than the first average density $\rho 1$, and in various illustrative embodiments is between 200 kg/m^3 and 400 kg/m^3, between 250 kg/m^3 and 350 kg/m^3, or may be about 300 kg/m^3.

One or more embodiments of the earplugs according to an embodiment may be formed in a multiple step process. In one or more embodiments, the earplugs described herein may be formed in a process that involves an intermediate state in which a core is covered with an outer layer of a second

material (directly or indirectly), to result in a pre-formed hearing protection device that may be referred to as a pre-form, but which does not yet include a sound-attenuating body. One illustrative embodiment of a pre-form is depicted in FIGURE 10. The pre-form **140** includes an outer layer **142** located over a core **110**. In one or more embodiments, the outer layer **142** of pre-form **140** includes an unactivated foaming agent. In one or more embodiments, the unactivated foaming agent includes an expandable sphere foaming agent that includes thermoplastic spheres, for example, that include a shell encapsulating a hydrocarbon or other appropriate gas that expands when exposed to heat or other activation source. Expansion of the thermoplastic shell results in an increased volume and reduced density of the material of outer layer **142**. The unactivated foaming agent may also be a chemical foaming agent that includes an expandable material that is self-contained or otherwise not contained by an expandable sphere. Activation of such a foaming agent causes the expandable material to expand creating voids or gaps in the material of the outer layer.

Activation of the foaming agent or agents present in outer layer **142**, and the associated expansion of outer layer **142**, can be controlled to provide an earplug having a sound-attenuating body and outer layer of stem portion exhibiting a desired shape, density, hardness, and other desired characteristics. The presence of both an expandable sphere foaming agent and a chemical foaming agent may assist in providing sufficient structure and expansion such that the outer layer may be appropriately formed during activation, while reducing the hardness of the outer layer from a level that would otherwise result if only an expandable sphere foaming agent were used. Some or all of a gas generated by a chemical foaming agent may escape during activation such that some or all of the gas is not present in the outer layer after activation. Some or all of an expandable sphere foaming agent may remain in the outer layer of a final earplug such that a final earplug may include thermoplastic spheres. In one or more illustrative embodiments, the material used in outer layer **142** which forms the sound-attenuating bodies and an outer layer of the stem portions of earplugs according to an embodiment may include between 1 % and 10 % by weight of the foaming agent or remnants of the foaming agent after being formed into the sound-attenuating body and the outer layer of the stem portion.

In the intermediate state shown in FIGURE 10, pre-form **140** may have a length that is roughly equivalent to the desired length of an earplug to be formed from the pre-form **140**. In one or more alternative embodiments, the pre-form **140** may have an extended length that is sufficient for subsequent formation of two or more earplugs. Pre-form **140** having an extended length may facilitate handling for subsequent processing and activation of the foaming agent. In one or more embodiments, pre-form **140** is cut to an extended length that can be subsequently cut and activated to yield a desired quantity of earplugs. An extended pre-form **140** may be coiled or otherwise shaped for ease in transporting or handling.

Methods of making personal protective equipment, such as earplugs according to an embodiment, may include covering a core with an outer layer, and applying heat to at least a portion of the outer layer such that at least a portion of the outer layer expands to form a sound-attenuating body and, in one or more embodiments, an outer layer of a stem portion. Expansion of the outer layer may, in one or more

embodiments, occur due to activation of a foaming agent present in the material of the outer layer and can be controlled by positioning at least a portion of the outer layer in a mold prior to expansion. Portions of the outer layer may be confined by the shape of the mold as the outer layer expands, or are shielded from heat to limit activation of the foaming agent.

A schematic diagram of one illustrative embodiment of a process of making earplugs according to an embodiment is depicted in FIGURE 11. In the depicted process, an extended core **110** is formed by extruding a first material through a first die **150** and drawing the first material to an appropriate diameter. As described above, the core may be solid or may include a longitudinal channel extending through all or a portion of core **110**, and may include one or more concentric layers having differing characteristics. The first material may be cooled such that it remains stable in subsequent steps of the manufacturing process. The magnitude of temperature change may depend on the materials used and the desired characteristics of the final product. In one or more embodiments, elongate core **110** is cooled as necessary such that it exhibits a temperature at a point before being covered by second die **152** that is lower than an activation or curing temperature of the second material used for outer layer **142**. Prior to being covered by the second material of outer layer **142**, elongate core **110** has an extended length and is not yet cut to the desired length for an earplug.

In the embodiment shown in FIGURE 11, elongate core **110** is covered, directly or indirectly, with an outer layer **142** comprising a second material by second die **152**. Second die **152** may be a co-extrusion die or other suitable die as known in the art. In one or more embodiments, the second material includes a thermoplastic and one or more unactivated foaming agents. Outer layer **142** is applied to elongate core **110** while remaining at a temperature below an activation temperature of the unactivated foaming agents. In one or more embodiments, the second material includes SEBS and a foaming agent having an activation temperature between 100 and 205 °C. Other suitable materials may include plasticized polyvinyl chloride, ethylene propylene diene monomer (EPDM) rubber, styrene butadiene rubber (SBR), butyl rubber, natural rubbers, other thermoplastics, thermoset polymers, and other suitable materials as known in the art. In embodiments in which outer layer **142** includes a second material having a rubber or thermoset polymer, outer layer **142** may be applied at a temperature below a vulcanizing or curing temperature of the rubber or thermoset polymer. In such an embodiment, outer layer **142** may include an unactivated foaming agent and an uncured or partially cured rubber or thermoset polymer that can be subsequently activated and cured, respectively, with heat or other suitable activation or curing process.

In one or more embodiments, outer layer **142** is in a molten state when applied to cover core **110**. As a result, molecules of outer layer **142** and core **110**, or of one or more intermediate layers, are believed to diffuse into the material or surface of each other and a thermal bond is formed. The core **110** may be covered with outer layer **142**, or one or more intermediate layers, by laminating, molding, spraying, dipping, or other suitable process as known in the art as an alternative or in addition to second die **250**. Such steps may occur before or after core **110** is cut to a desired length. Regardless of the process used,

the temperature of outer layer **142** should remain below the activation temperature of the foaming agent(s) such that the foaming agent(s) remain unactivated during the covering process.

In one or more embodiments, core **110** covered by outer layer **142** is cut to the length of a desired earplug with cutter **154**. The result is pre-form **140** having core **110** and outer layer **142** in which outer layer **142** includes an unactivated foaming agent that may be subsequently activated to create an earplug having a sound-attenuating body and an outer layer of the stem portion formed by the outer layer **142** of the pre-form **140** (see, e.g., sound-attenuating body **120** and stem portion **124** of earplug **100** depicted in FIGURES 1-9).

Cutter **154** may cut pre-form **140** to a desired length of an earplug according to an embodiment, or to an extended length sufficient for subsequent formation of two or more earplugs. In one or more embodiments, pre-form **140** is cut to an extended length that can be subsequently cut and activated, or vice versa, to yield a desired quantity of earplugs. An extended pre-form **140** may be coiled or otherwise shaped for ease of handling or transportation.

In one or more embodiments, the unactivated foaming agent present in outer layer **142** includes thermoplastic spheres encapsulating a hydrocarbon or other expandable material. Application of an appropriate amount of heat causes the thermoplastic shell and hydrocarbon to expand. Expansion of outer layer **142** can be controlled by the thickness and composition of outer layer **142**, selective application of heat, catalyst, or other activation source, and/or by placing at least a portion of pre-form **140** in a mold to limit expansion of outer layer **142** as the foaming agent is activated.

One illustrative embodiment of a mold assembly **190** that may be used to manufacture one or more embodiments of earplugs according to an embodiment is depicted in FIGURES 12A and 12B. The mold assembly **190** includes a stem portion **170** and a sound-attenuating body portion **180**. The stem portion **170** and the sound-attenuating body portion **180** include, respectively, a stem cavity **171** and a sound-attenuating body cavity **182**. The stem cavity **171** and the sound-attenuating body cavity **182** are used to control expansion of an outer layer of a pre-form that includes, in one or more embodiments, a core **110** and an outer layer **142**. The stem cavity **171** is in the form of a stem portion that receives a portion of pre-form. The pre-forms used in mold assemblies such as the illustrative embodiment of a mold assembly **190** as depicted in FIGURES 12A and 12B, may be cut to the length of a desired earplug prior to being placed in the mold assembly **190**.

Heat is applied to the pre-form located in the mold assembly **190** to raise the temperature of outer layer **142** at least to an activation temperature of a foaming agent present in outer layer **142** and cause outer layer **142** to expand as shown in FIGURE 12B. In one or more embodiments, a gap **176** may exist between the outer layer **142** of the pre-form and the inner surface of the stem cavity **171**. Upon application of heat or other suitable activation source, a portion of outer layer **142** expands to fill gap **176** and substantially conforms to the shape of the stem cavity **171**. In one or more embodiments, the stem portion of an earplug positioned in stem cavity **171** may be effectively shielded from heat such that activation of the foaming agent is limited. Alternatively or in addition, stem cavity **171** constrains outer layer **142** and substantially inhibits expansion caused by activation of the foaming agent that would

otherwise result in a greater volume and less dense outer layer over the portion of the core **110** in the stem cavity **170**. Due to the constraint of the mold and/or limited activation of the foaming agent, the stem portion of an earplug (see, e.g., stem portion **124** in earplug **100** as depicted in FIGURES 1-9) may have a greater average density and/or a greater hardness than that of sound-attenuating body portion of the same earplug.

The illustrative mold assembly **190** includes a sound-attenuating body cavity **182** that is used to provide the shape of a sound-attenuating body of an earplug according to an embodiment. When a portion of pre-form is initially placed in the sound-attenuating body cavity **182**, the portion of the pre-form in the sound-attenuating body cavity **182** does not occupy all of the cavity **182**. As the material in outer layer **142** is heated it may be softened and a foaming agent in the outer layer **142** is activated, causing the material of the outer layer to expand to fill the sound-attenuating body cavity **182**. In one or more embodiments, some of the material in the portion of the outer layer **142** located in the stem cavity **171** may flow into the sound-attenuating body cavity **182**. In one or more embodiments, the mold assembly may include one or more small gas vents to allow excess gas to escape while preventing passage of any molten material as the material in the outer layer **142** expands.

The mold assembly may be oriented such that the stem cavity **171** is positioned above the sound-attenuating body cavity **182**. In such an orientation, any flow of material from the stem cavity **171** into the sound-attenuating body cavity **182** during the expansion process may be enhanced. In one or more embodiments, such an orientation may facilitate the formation of an integral skin on sound-attenuating body of an earplug formed using the mold assembly because cells or gaps formed during activation of the foaming agent may tend to move upward and away from a lower surface of the sound-attenuating body cavity **182**.

In addition to forming the outer shape of the sound-attenuating body of an earplug according to an embodiment, the sound-attenuating body cavity **182** also includes a boss **184** that extends upward toward the opening of the sound-attenuating body cavity **182**, i.e., extends towards the stem cavity **171** of the mold assembly **190**. The boss **184** can be described as extending upwards from a bottom **181** of the cavity **182**. The boss **184** is used, in one or more embodiments, to form the tip cavity **130** in the sound-attenuating body **120**.

The boss **184** may include a depression **185** that is positioned to receive the distal end **111** of the core **110** of the pre-form and, in some embodiments, to deform the distal end **112**. The deformation of the distal end **112** of the core **110** may produce an enlarged portion at the distal end **112**. That deformation of the distal end **112** of the core **110** may be caused by the application of heat and/or pressure by the depression **185** of boss **184**.

The boss **184** further includes a plurality of cut-outs **186** that form the protrusions **30** in the tip cavity **130**. The number, shape, and size of the cut-outs **186** mirror the intended shape and size of the protrusions **30** discussed above. For example, the cut-outs **186** have a length that may extend the height of the boss **184** for creating protrusions **30** that extend from the bottom **133** of the tip cavity **130** to the distal opening **134** of the tip cavity **130**, as shown in FIGURES 1-4 (protrusions **30**) and FIGURE 13 (boss

184). On the other hand, the length of the cut-outs **186'** may extend only a part of the height of the boss **184'** for creating protrusions **30'** that extend only part of the way from the bottom **133** toward the distal opening **134** of the tip cavity **130**, as shown in FIGURES 6-9 (protrusions **30'**) and FIGURE 14 (boss **184'**). The boss **184** may include, for example, 2 to 12, 2 to 10, 3 to 8, or 4 to 6 cut-outs **186**, **186'**.

After expansion of the outer layer **142** such that the material occupies all of the stem cavity **171** and the sound-attenuating body cavity **182**, the earplug thus formed may be cooled and ejected from the mold assembly. The earplug thus formed includes a sound-attenuating body **120** having the shape of the sound-attenuating body cavity **182**, a tip cavity **130** having the shape of the boss **184**, and a stem portion **124** having the shape of stem cavity **171**.

In one or more embodiments of earplugs according to an embodiment, the earplugs may be formed from pre-forms having a total length along a longitudinal axis of between approximately 15 mm and 40 mm, or of about 25.5 mm. In one or more embodiments, the outer layer **142** of a pre-form may have an outer diameter of between approximately 2.5 mm and 7.5 mm, or of about 5.5 mm. In one or more embodiments of the pre-forms, the core may have an outer diameter of between approximately 1.5 mm and 3.5 mm, or of about 2.5 mm. in those embodiments in which the core has a channel formed therethrough, the channel may have a diameter of between approximately 1.0 mm and 2.0 mm, or of approximately 1.5 mm.

After activation of outer layer **142** of a pre-form as described above, and earplug thus manufactured may have a total length L measured along a longitudinal axis between the tip of the sound-attenuating body **120** and the opposite end of the stem portion **124** of between approximately 15 mm and 40 mm, or of approximately 25.5 mm. In one or more embodiments, sound-attenuating body **120** of earplugs according to an embodiment may have an outer diameter (measured transverse to a longitudinal axis of the earplug) at its widest point between approximately 10 mm and 20 mm, or of approximately 15 mm. In one or more embodiments, the stem portion **124** may have a diameter (measured transverse to a longitudinal axis of the earplug) of between approximately 3 mm and 10 mm, or of approximately 6.5 mm. In one or more embodiments, the core may have an outer diameter (measured transverse to a longitudinal axis of the earplug and below the bottom of the tip cavity) of between approximately 1.5 mm and 3.5 mm, or of approximately 2.5 mm. If provided in the core, a channel may have a diameter (measured transverse to a longitudinal axis of the earplug) of between approximately 1.0 mm and 2.0 mm, or of approximately 1.5 mm. The dimensions of pre-forms used to manufacture earplugs according to an embodiment and the earplugs themselves can be varied based on the materials used to form the sound-attenuating bodies and/or the cores.

The earplugs **100** described here may also be made according to variations of methods described herein and other methods. For example, an earplug according to an embodiment may be made by covering a relatively stiffer elongate core with an outer layer as a foaming agent is activated, or covering a relatively stiffer elongate core with an outer layer that has been previously foamed. The foamed outer layer may be subsequently cut, compressed, densified, or otherwise shaped to form an outer layer having a stem portion and a sound-attenuating body having a tip cavity located therein.

Although the illustrative embodiments of earplugs described herein include a sound-attenuating body that is made of material that is also used and integrally formed with at least the outer layer of a stem portion, one or more alternative embodiments of the earplugs according to an embodiment can be made by any suitable technique. In one or more alternative embodiments, an earplug according to an embodiment could be manufactured in a plurality of pieces that are then assembled and/or attached to each other to form a complete earplug. For example, a sound-attenuating body and a stem portion may be separately constructed and then assembled together and attached by any suitable technique or combination of attachments, e.g., welds (sonic, thermal, chemical, etc.), adhesive, an interference fit, mechanical connections (threaded connection, mechanical fasteners, etc.).

U.S. patent Ser. No. 8,968,613 (Endle et al.), titled Method of Making an Earplug and U.S. patent Ser. No. 9,549,855 (Hamer et al.), describe methods of making personal protective equipment such as a push-to-fit earplug and materials used in those methods that may be used in part and/or with some modifications to manufacture earplugs according to an embodiment.

The earplugs and methods of making earplugs according to an embodiment may, in one or more embodiments, provide one or more benefits. In one or more embodiments, the earplugs described herein may be comfortably positioned in the ear canal of a user to provide a desired level of hearing protection, and the presence of a stiffer elongate core in the earplug may promote hygiene and/or reduce insertion time by eliminating the need to roll down a sound-attenuating body prior to insertion. The presence of a tip cavity may, in one or more embodiments, allow one or more portions of a sound-attenuating body surrounding the tip cavity to collapse inward upon insertion, thus possibly enhancing the ability of the earplugs described herein to conform to the ear canal of a user. The presence of a plurality of protrusions in the tip cavity may, in one or more embodiments, lessen the likelihood that a user can feel the stiff core disposed inside the sound-attenuating body.

EXEMPLARY EMBODIMENTS

Embodiment 1 is an earplug comprising:

a core comprising a proximal end, a distal end, and a major outer surface and a longitudinal axis extending from the proximal end to the distal end;

a sound-attenuating body attached to the major outer surface of the core, the sound-attenuating body comprising a base and a tip, the distal end of the core disposed within the sound-attenuating body and the tip extending distally beyond the distal end of the core; and

a tip cavity of the sound-attenuating body extending proximally from the tip and comprising a distal opening, the tip cavity having a volume defined by a side wall formed by the sound-attenuating body and a bottom at least partially formed by the distal end of the core,

the tip cavity side wall comprising a plurality of protrusions extending inwardly toward the longitudinal axis.

Embodiment 2 is the earplug of embodiment 1, wherein the plurality of protrusions comprises from 2 to 12, from 3 to 10, or from 4 to 8 protrusions.

Embodiment 3 is the earplug of embodiment 1 or 2, wherein the plurality of protrusions comprises from 3 to 6 protrusions.

Embodiment 4 is the earplug of any of the above embodiments, wherein each of the of protrusions has a proximal end that contacts the distal end of the core.

Embodiment 5 is the earplug of embodiment 1, wherein each of the plurality of protrusions is thermally bonded to the distal end of the core.

Embodiment 6 is the earplug of any of the above embodiments, wherein the plurality of protrusions is integrally formed with the sound-attenuating body.

Embodiment 7 is the earplug of any of the above embodiments, wherein each of the plurality of protrusions extends distally from the bottom of the tip cavity.

Embodiment 8 is the earplug of any of the above embodiments, wherein the plurality of protrusions defines pillars, each pillar individually extending in a plane with the longitudinal axis.

Embodiment 9 is the earplug of any of the above embodiments, wherein at a plane perpendicular to the longitudinal axis, the tip cavity has minor radius at an apex of a protrusion and a major radius between adjacent protrusions, wherein the minor radius is from about 15 to about 85 %, from about 20 to about 75 %, or from about 25 to about 65 % of the major radius.

Embodiment 10 is the earplug of any of the above embodiments, wherein the tip cavity has a first major cross dimension at a plane at the distal end of the core and a second major cross dimension at a plane adjacent the distal opening, and wherein the first major cross dimension is greater than the second major cross dimension.

Embodiment 11 is the earplug of embodiment 10, wherein the second major cross dimension is from about 5 to about 80 %, from about 10 to about 60 %, or from about 20 to about 50 % of the first major cross dimension.

Embodiment 12 is the earplug of embodiment 10, wherein the distal end of the core has a core cross dimension that is smaller than the first major cross dimension and greater than the second major cross dimension of the tip cavity.

Embodiment 13 is the earplug of embodiment 12, wherein the core cross dimension is from about 50 to about 120 %, from about 70 to about 110 %, or from about 80 to 100 % of the first major cross dimension of the tip cavity.

Embodiment 14 is the earplug of any of the above embodiments, wherein a portion of the distal end of the core is exposed at the bottom of the tip cavity.

Embodiment 15 is the earplug of any of the above embodiments, wherein the distal end of the core forms a first portion of the bottom of the tip cavity and the sound-attenuating body forms a second portion of the bottom, and wherein the first portion extends distally beyond the second portion.

Embodiment 16 is the earplug of any of the above embodiments, wherein the tip cavity has a depth extending from a proximal-most point of the bottom to the distal opening, the depth ranging from about 2.5 to about 10 mm, from about 3.8 to about 8.3 mm, or from about 4.7 to about 6.3 mm.

Embodiment 17 is the earplug of any of the above embodiments, wherein the sound-attenuating body has an axial length, and the tip cavity has a depth extending from a proximal-most point of the bottom of the tip cavity to the distal opening, the depth ranging from about 10 to about 65 %, from about 20 to about 60 %, or from about 30 to about 50 % of the axial length of the sound-attenuating body.

Embodiment 18 is the earplug of any of the above embodiments, wherein each of the plurality of protrusions has a length extending to the distal opening of the tip cavity.

Embodiment 19 is the earplug of any of the above embodiments, wherein the plurality of protrusions is visible through the distal opening of the tip cavity.

Embodiment 20 is the earplug of any of the above embodiments, wherein the distal end of the core comprises a non-planar distal surface.

Embodiment 21 is the earplug of any of the above embodiments, wherein the tip cavity has a depth extending from a proximal-most point of the bottom to the distal opening, and wherein each of the plurality of protrusions has a length extending from about 14 to about 100 %, from about 15 to about 95 %, from about 16 to about 80 %, from about 18 to about 60 %, or from about 20 to about 50 % of the depth of the tip cavity.

Embodiment 22 is the earplug of any of the above embodiments, wherein the plurality of protrusions has a total volume ranging from about 5 to about 60 %, from about 7 to about 55 %, from about 15 to about 55 %, or from about 25 to about 60 % of a volume of the tip cavity measured without the plurality of protrusions.

Embodiment 23 is the earplug of any of the above embodiments, wherein the core is constructed of a first material and the sound-attenuating body is constructed of a second material, wherein the first material is different from the second material.

Embodiment 24 is the earplug of any of the above embodiments, wherein the core is constructed of a first material with a first degree of foaming and the sound-attenuating body is constructed of a second material with a second degree of foaming, wherein the first material is different from the second material.

Embodiment 25 is the earplug of any of the above embodiments, wherein the sound-attenuating body is thermally bonded to at least a portion of the outer major surface of the core.

Embodiment 26 is the earplug of any of the above embodiments, wherein the earplug is free of adhesives.

Embodiment 27 is the earplug of any of the above embodiments, wherein the core is constructed of a first material with a first degree of foaming and the sound-attenuating body is constructed of a second material with a second degree of foaming, wherein the first material is the same as the second material.

Embodiment 28 is the earplug of embodiment 23, wherein the first material comprises a thermoplastic.

Embodiment 29 is the earplug of embodiment 23, wherein the second material comprises a thermoplastic, a partial thermoset, a thermoset polymer, or a combination thereof.

Embodiment 30 is the earplug of any of the above embodiments, wherein the sound-attenuating body has a volume that is defined as a volume occupied by material that makes up the sound-attenuating body, wherein the tip cavity volume is from about 1 to about 10 %, from about 2 to about 7, or from about 3 to about 5 % of the volume of the sound-attenuating body.

Embodiment 31 is the earplug of any of the above embodiments, wherein the core has a cross-section that is uniform at any location between the proximal end and the distal end of the core.

Embodiment 32 is a method of making an earplug, the method comprising:

covering at least a portion of a major outer surface of a core that comprises a first material with a second material that comprises an unactivated foaming agent, the core comprising a proximal end, a distal end, and a major outer surface and a longitudinal axis extending from the proximal end to the distal end;

inserting the distal end of the core and at least a portion of the second material into a mold cavity; and

activating the unactivated foaming agent in the mold cavity to form a sound-attenuating body in the mold cavity that is attached to the major outer surface of the core, the sound-attenuating body comprising:

a base and a tip, the distal end of the core disposed within the sound-attenuating body and the tip extending distally beyond the distal end of the core; and

a tip cavity of the sound-attenuating body extending proximally from the tip and comprising a distal opening, the tip cavity having a volume defined by a side wall formed by the sound-attenuating body and a bottom at least partially formed by the distal end of the core,

the tip cavity side wall comprising a plurality of protrusions extending inwardly toward the longitudinal axis.

Embodiment 33 is the method of embodiment 32, wherein a boss extends into the mold cavity, wherein the boss is positioned to contact the first end of the core when the first end of the core is inserted into the mold cavity.

Embodiment 34 is the method of embodiment 33, wherein the boss comprises a cup extending axially from a base of the mold.

Embodiment 35 is the method of embodiment 34, wherein the cup comprises a plurality of cut-outs, for example 2 to 12, 2 to 10, 3 to 8, or 4 to 6 cut-outs, and wherein the second material flows into the cut-outs to form the protrusions.

Embodiment 36 is the method of embodiment 33, wherein the method further comprises deforming the distal end of the core using the boss.

Embodiment 37 is the method of any one of embodiments 32 to 36, wherein the method further comprises deforming the first end of the core in the mold cavity.

26 Feb 2020
2018326832

CLAIMS

1. An earplug comprising:

a core comprising a proximal end, a distal end, and a major outer surface and a longitudinal axis extending from the proximal end to the distal end;

a sound-attenuating body attached to the major outer surface of the core, the sound-attenuating body comprising a base and a tip, the distal end of the core disposed within the sound-attenuating body and the tip extending distally beyond the distal end of the core; and

a tip cavity of the sound-attenuating body extending proximally from the tip and comprising a distal opening, the tip cavity having a volume defined by a side wall formed by the sound-attenuating body and a bottom at least partially formed by the distal end of the core, the tip cavity side wall comprising a plurality of protrusions extending inwardly toward the longitudinal axis.

2. The earplug of claim 1, wherein the plurality of protrusions comprises from 2 to 12 protrusions.

3. The earplug of claim 1, wherein each of the protrusions has a proximal end that contacts the distal end of the core.

4. The earplug of claim 1, wherein each of the plurality of protrusions is thermally bonded to the distal end of the core; or

wherein the plurality of protrusions is integrally formed with the sound-attenuating body.

5. The earplug of claim 1, wherein each of the plurality of protrusions extends distally from the bottom of the tip cavity.

6. The earplug of claim 1, wherein the plurality of protrusions defines pillars, each pillar individually extending in a plane with the longitudinal axis.

7. The earplug of claim 1, wherein at a plane perpendicular to the longitudinal axis, the tip cavity has a minor radius at an apex of a protrusion and a major radius between adjacent protrusions, wherein the minor radius is from about 15 to about 85 % of the major radius.

26 Feb 2020
2018326832

8. The earplug of claim 1, wherein the tip cavity has a first major cross dimension at a plane at the distal end of the core and a second major cross dimension at a plane adjacent the distal opening, and wherein the first major cross dimension is greater than the second major cross dimension.

9. The earplug of claim 1, wherein a portion of the distal end of the core is exposed at the bottom of the tip cavity.

10. The earplug of claim 1, wherein each of the plurality of protrusions has a length extending to the distal opening of the tip cavity.

11. The earplug of claim 1, wherein the plurality of protrusions is visible through the distal opening of the tip cavity.

12. The earplug of claim 1, wherein the distal end of the core comprises a non-planar distal surface.

13. The earplug of claim 1, wherein the plurality of protrusions has a total volume ranging from about 5 to about 60 % of a volume of the tip cavity measured without the plurality of protrusions.

14. The earplug of claim 1, wherein the core is constructed of a first material and the sound-attenuating body is constructed of a second material, wherein the first material is different from the second material.

15. The earplug of claim 1, wherein the sound-attenuating body is thermally bonded to at least a portion of the outer major surface of the core; and

wherein the earplug is free of adhesives.

2018326832 26 Feb 2020

16. The earplug of claim 14, wherein the first material comprises a thermoplastic; or wherein the second material comprises a thermoplastic, a partial thermoset, a thermoset polymer, or a combination thereof.

17. A method of making an earplug, the method comprising:

covering at least a portion of a major outer surface of a core that comprises a first material with a second material that comprises an unactivated foaming agent, the core comprising a proximal end, a distal end, and a major outer surface and a longitudinal axis extending from the proximal end to the distal end;

inserting the distal end of the core and at least a portion of the second material into a mold cavity; and

activating the unactivated foaming agent in the mold cavity to form a sound-attenuating body in the mold cavity that is attached to the major outer surface of the core, the sound-attenuating body comprising:

a base and a tip, the distal end of the core disposed within the sound-attenuating body and the tip extending distally beyond the distal end of the core; and

a tip cavity of the sound-attenuating body extending proximally from the tip and comprising a distal opening, the tip cavity having a volume defined by a side wall formed by the sound-attenuating body and a bottom at least partially formed by the distal end of the core,

the tip cavity side wall comprising a plurality of protrusions extending inwardly toward the longitudinal axis.

18. The method of claim 17, wherein a boss extends into the mold cavity, wherein the boss is positioned to contact the first end of the core when the first end of the core is inserted into the mold cavity.

19. The method of claim 17, wherein the method further comprises deforming the first end of the core in the mold cavity.

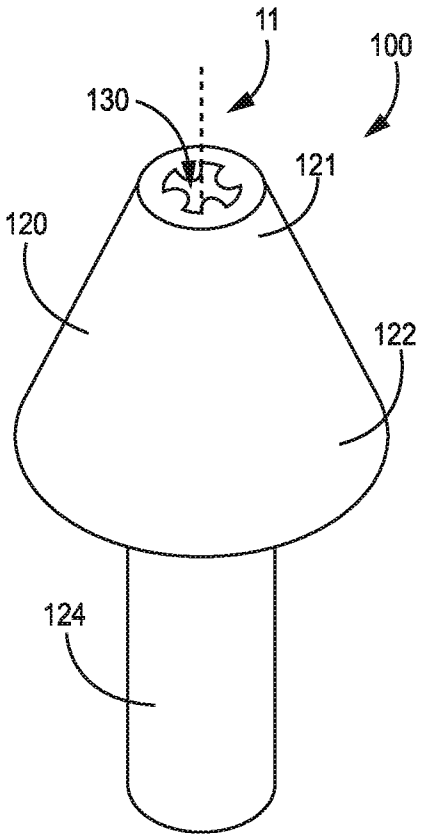

FIG. 1

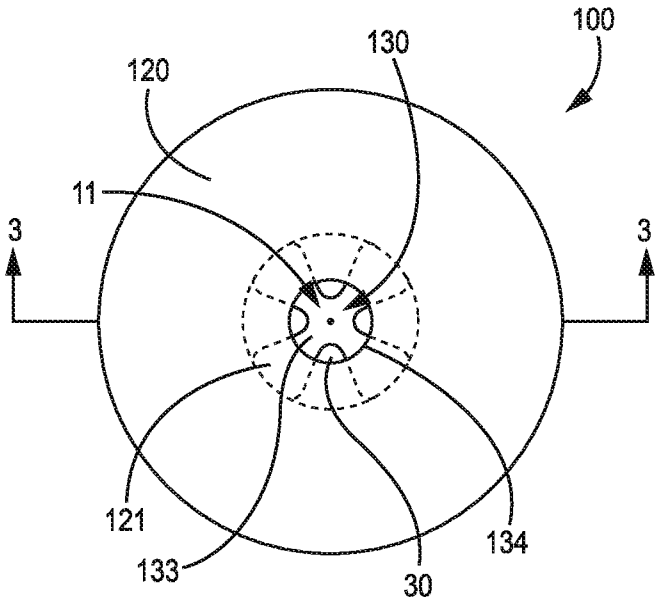

FIG. 2

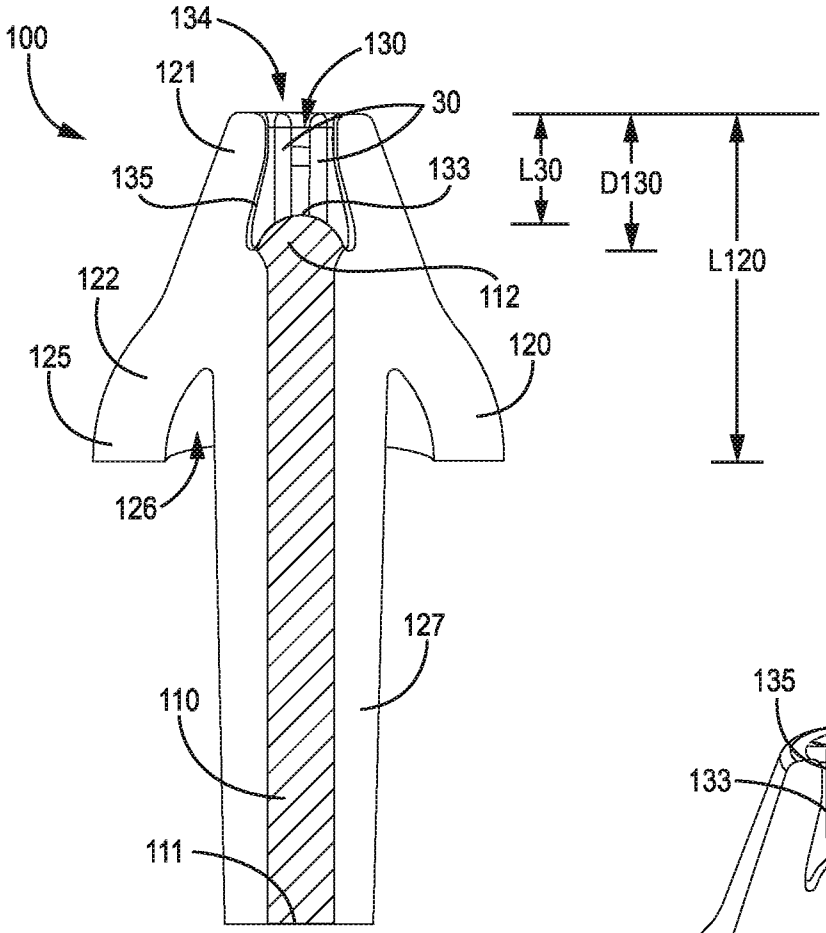
100
134
130
121
30
135
133
L30
D130
L120
122
112
125
120
126
127
110
111

FIG. 3

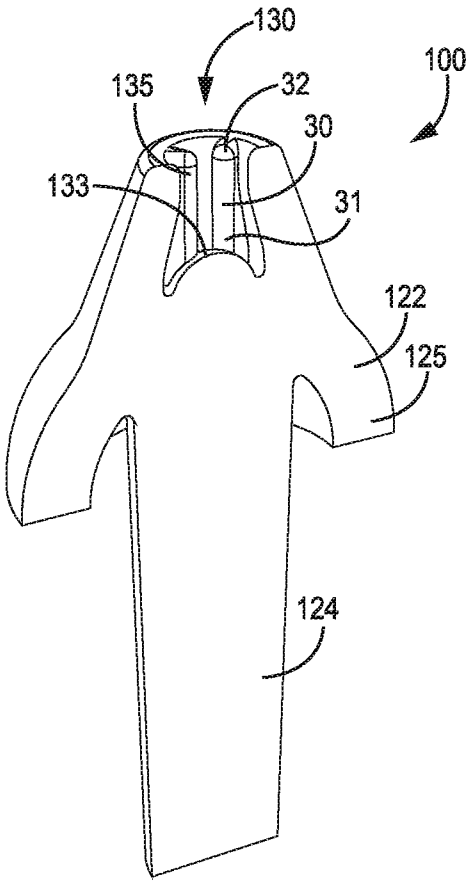
130
100
135
32
30
133
31
122
125
124

FIG. 4

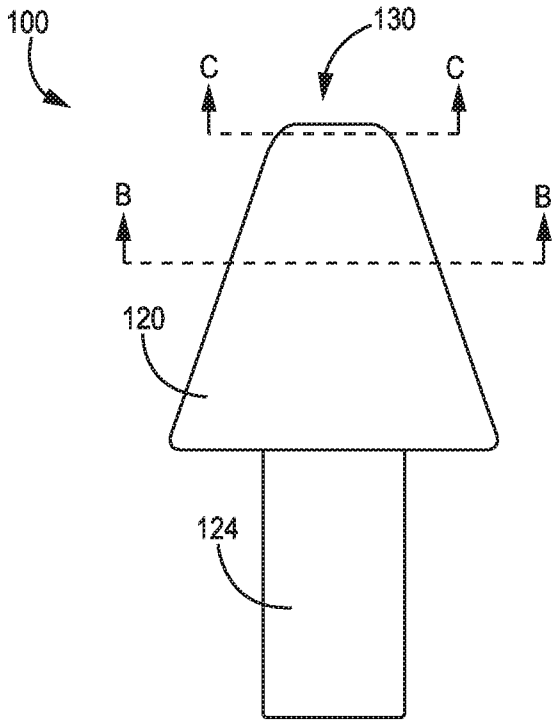

FIG. 5A

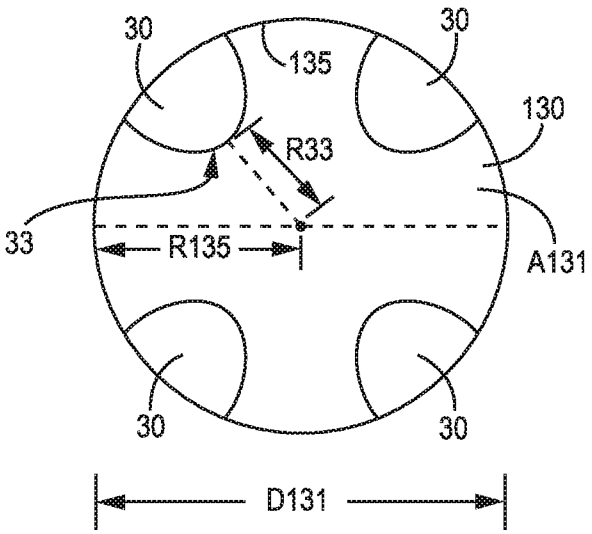

FIG. 5B

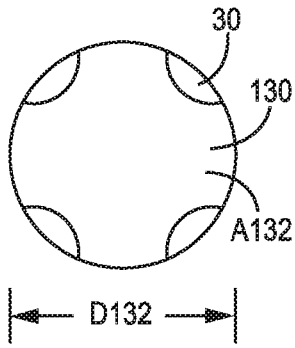

FIG. 5C

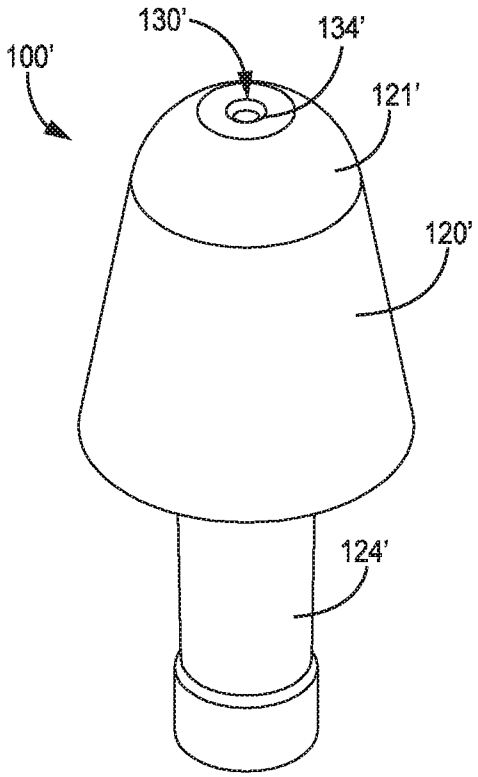

FIG. 6

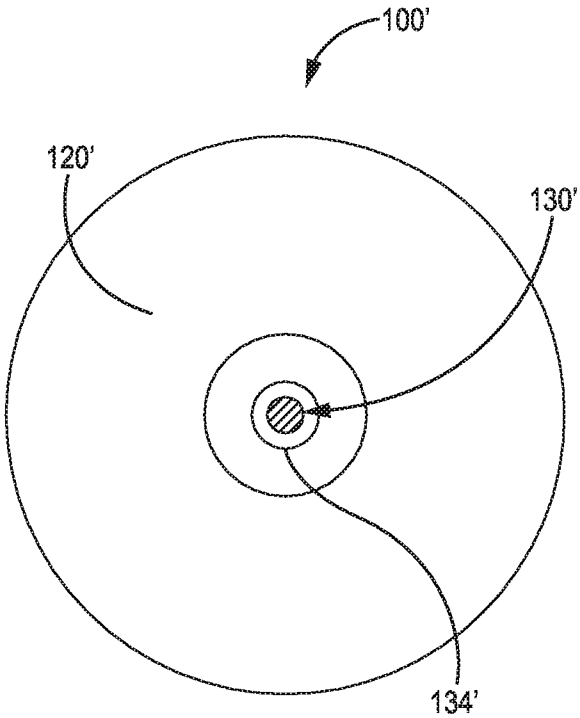

FIG. 7

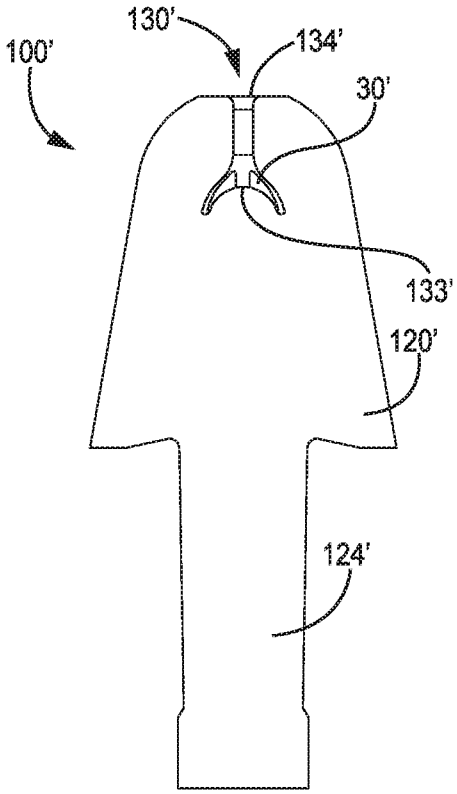

FIG. 8

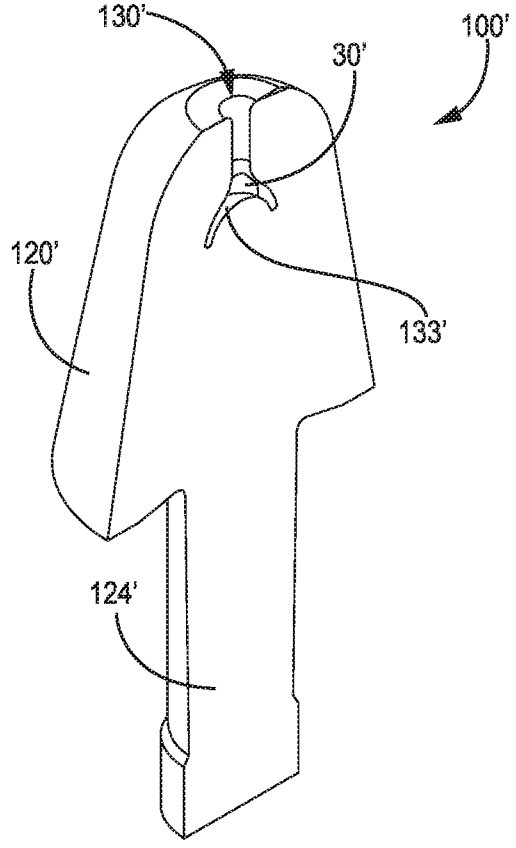

FIG. 9

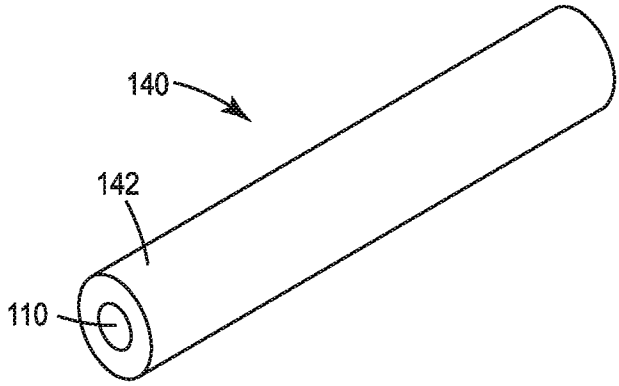

FIG. 10

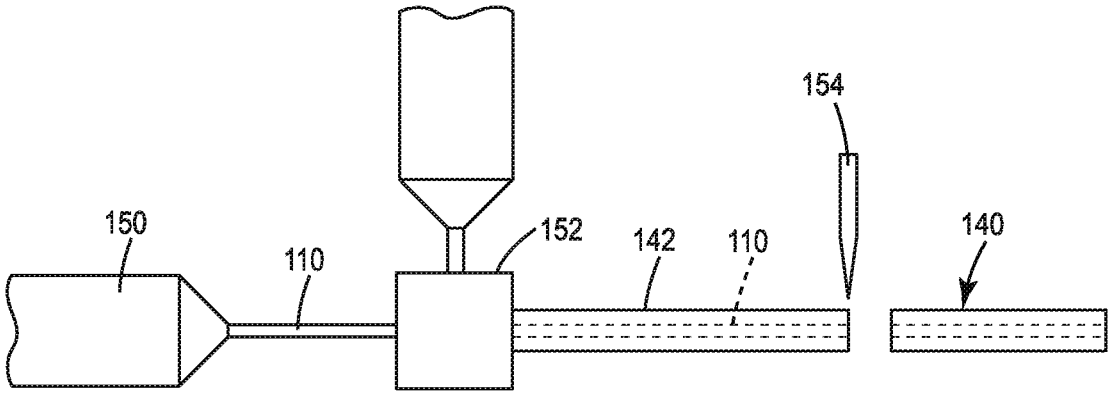

FIG. 11

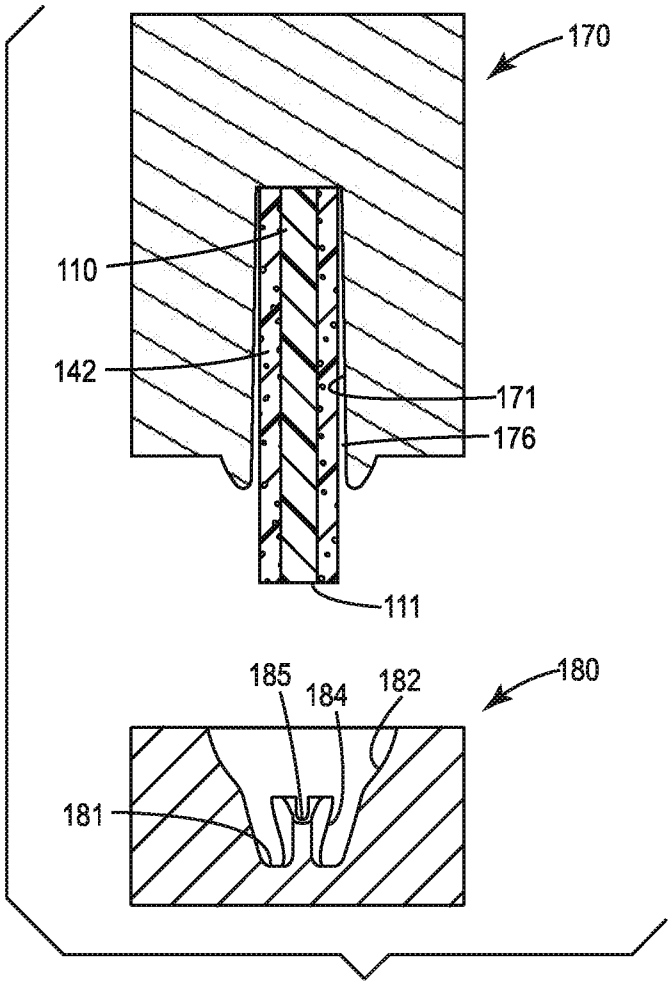

FIG. 12A

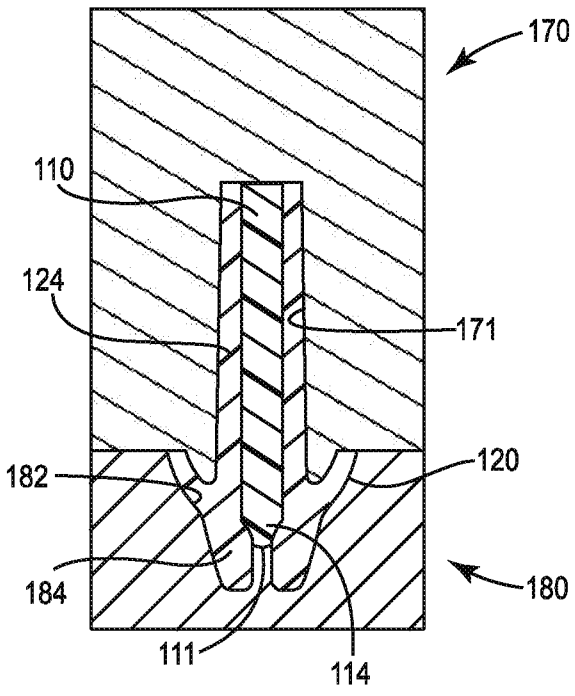

FIG. 12B

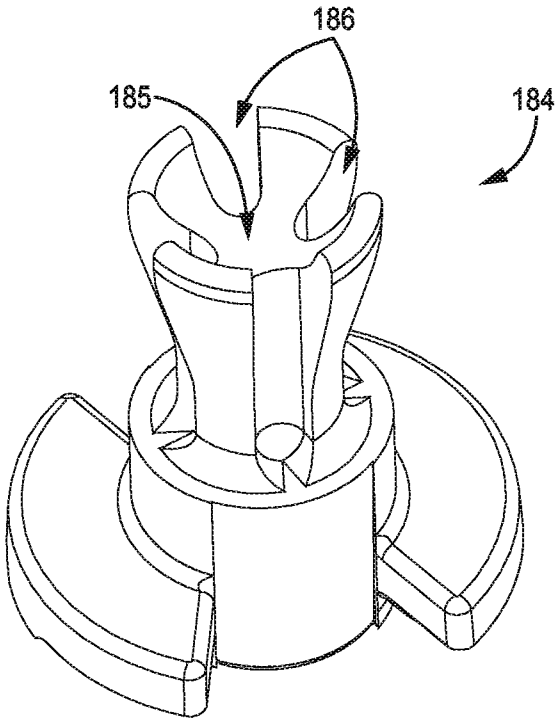

FIG. 13

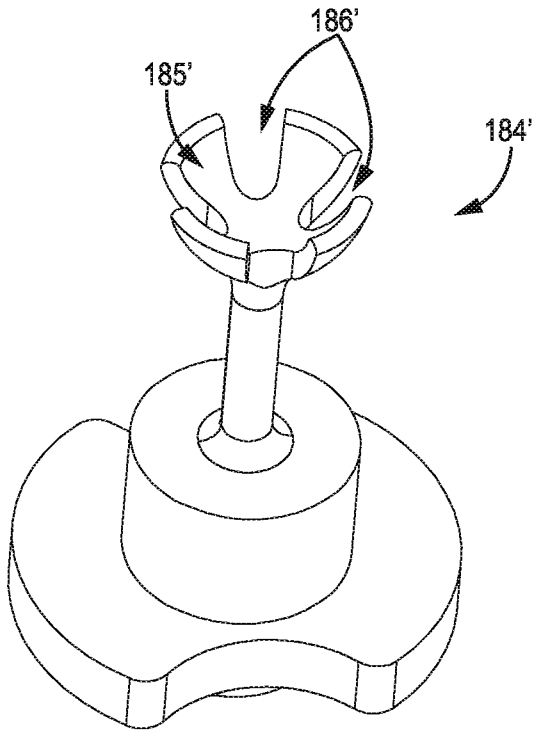

FIG. 14

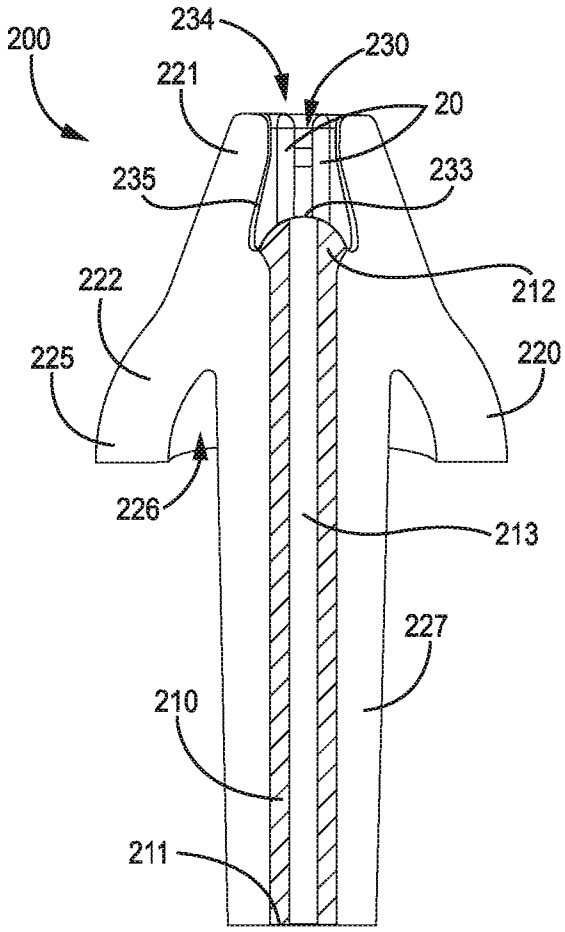

FIG. 15