United States Patent [19]

Raban

[11] **3,762,403**

[45] **Oct. 2, 1973**

[54] **ORTHOPEDIC RACK**

[76] Inventor: **Kenneth A. Raban,** Box 241, St. Johns, Ariz. 85936

[22] Filed: **Jan. 10, 1972**

[21] Appl. No.: **216,362**

[52] **U.S. Cl.** **128/75**

[51] **Int. Cl.** **A61h 1/02**

[58] **Field of Search** 128/75, 71, 84

[56] **References Cited**

UNITED STATES PATENTS

3,134,379	5/1964	Nightingale	128/75
2,511,061	6/1950	Hughes	128/71 X
2,786,512	3/1957	Moyer	128/75 X
2,853,999	9/1958	Risser	128/84 C

FOREIGN PATENTS OR APPLICATIONS

394,484	11/1965	Switzerland	128/71
1,187,011	4/1970	Great Britain	128/71
374,803	3/1964	Switzerland	128/71

Primary Examiner—Richard A. Gaudet
Assistant Examiner—J. Yasko
Attorney—William C. Cahill et al.

[57] **ABSTRACT**

A traction device, in the form of a frame adapted to fit under a hospital matress, has head, chest and foot harnesses and is articulated for adjustment with the raising of the bed at the head or foot.

5 Claims, 5 Drawing Figures

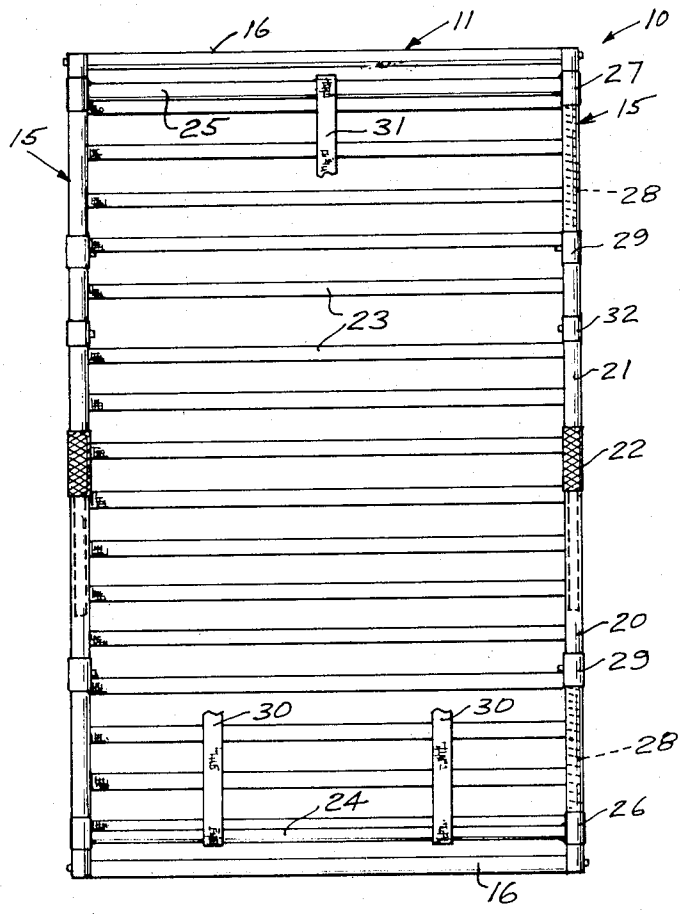

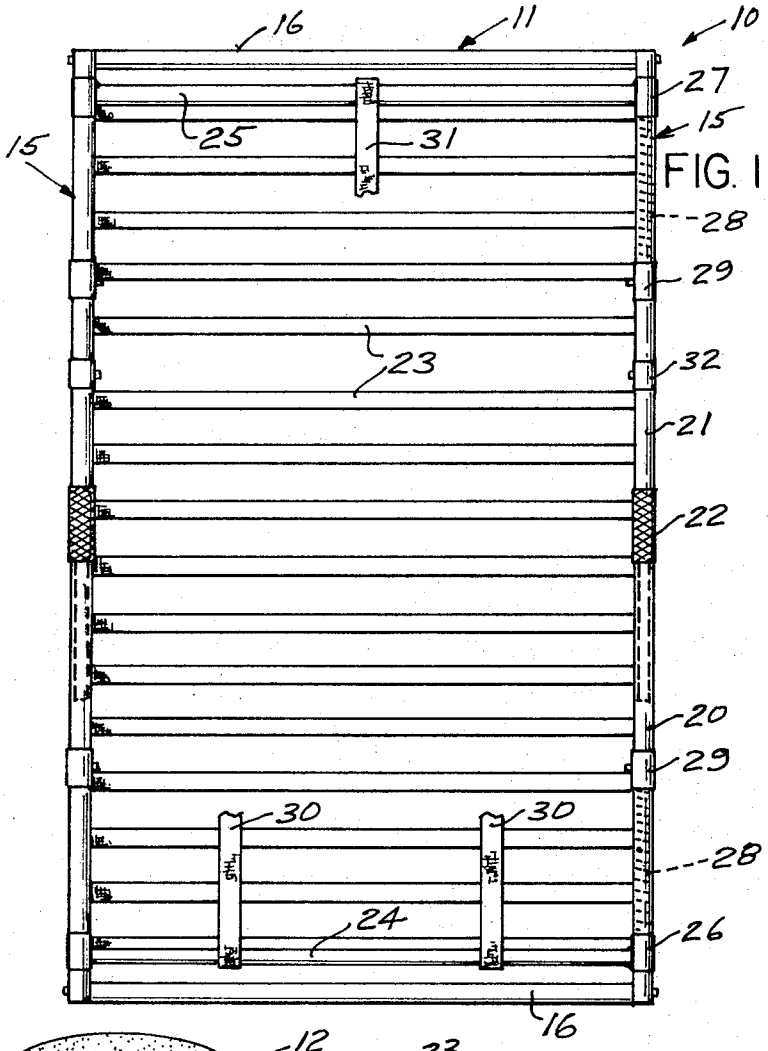

FIG. 1

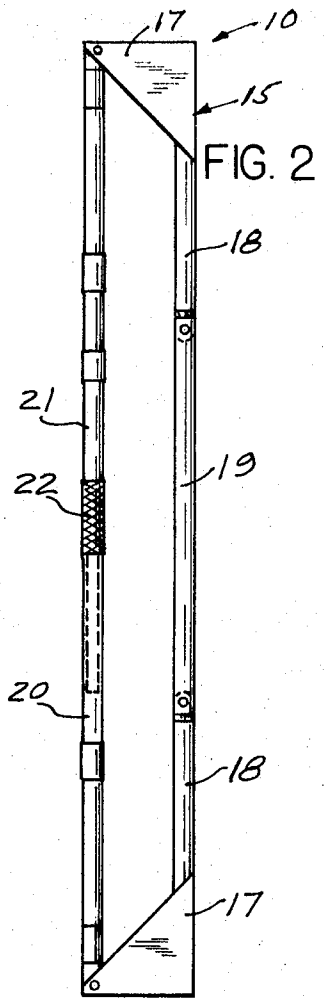

FIG. 2

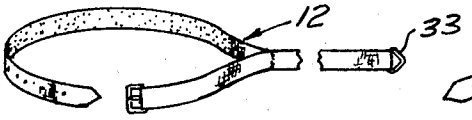

FIG. 3

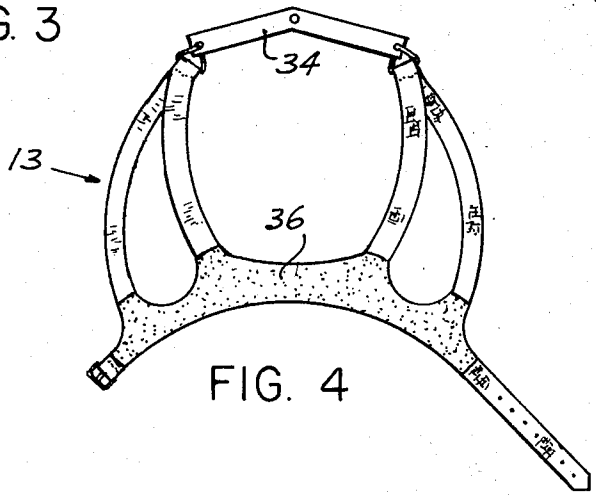

FIG. 4

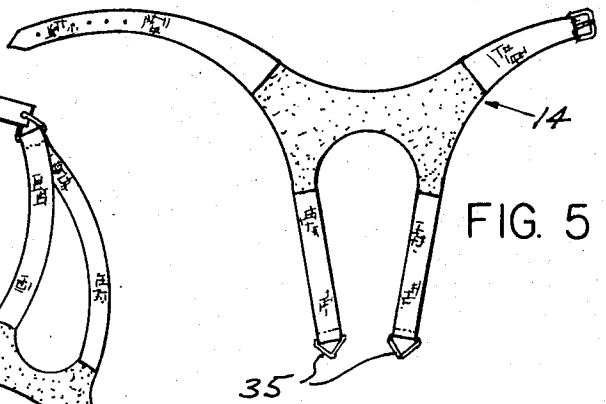

FIG. 5

ORTHOPEDIC RACK

This invention relates to orthopoedic equipment, more particularly to body traction devices.

A principal object of the present invention is to provide a traction device which will fit into a hospital bed, over and under the matress, and will allow the bed to be raised at either end, the traction harnesses being completely adjustable for tension and comfort.

Another object of the present invention is to provide a traction device that is easy to apply to or remove from, the patient.

These and other objects will be readily evident upon a study of the following specification and the accompanying drawing wherein:

FIG. 1 is a plan view of the invention, parts broken away at the attaching straps.

FIG. 2 is a side view of the device.

FIG. 3 is a perspective view of one of two chest attachments.

FIG. 4 is a plan view of the head harness.

FIG. 5 is a plan view of one of two foot harnesses.

Referring to the figures, the invention **10** comprises a frame **11** and a set of attachable harnesses including two chest harnesses **12**, a head harness **13** and two foot harnesses **14**.

Frame **11** is constructed in a rectangular form in which two articulated units **15** are the longer members while two tubes **16** are the shorter members. Each unit **15** comprises a pair of plates **17** fixed to a pair of tubes **18** each of which are pivoted at the ends to a tube **19**. The upper outer corner of plates **17** pivot a pair of tubes **20** and **21** which telescope. A helically moving sleeve **22** on tube **20** engages a rubber ring hearing on tube **21**, in a well known manner, so that a twist of the sleeve immobilizes the relative movement of the telescoped tubes. In the plane of the lower units **15**, straps **23** are fixed laterally along the frame. Between tubes **20**, and between tubes **21**, a pair of members **24** and **25** are fixed in pairs of collars **26** and **27** slidable on tubes **20** and **21**. Four coil springs **28** in these tubes are arranged to restrain movement of members **24** and **25** towards each other. This can be done, for example, by pins on the inside of collars **26** and **27** projecting into slots in tubes **20** and **21** behind springs **28**.

At the opposite ends of springs **28** adjustable restraints **29** are provided. These restraints, held by set screws, allow the setting of spring pressure transmitted to members **24** and **25**. Scales may be provided to read the pressure in pounds.

A pair of straps **30** are slidably secured on member **24** while another strap **31** is similarly placed on member **25**. Finally a pair of hooks **32** are attached to tube **21**.

Turning the harnesses, body harnesses **12** are attached by a ring **33** to hooks **32**. Head harness **13** is attached to strap **31** by a ring passed through the hole in bar **34**. Foot harnesses **14** are attached to straps **30** by rings **35**.

Traction device **10** is installed by removing the bed matress, setting the invention in the bed frame and then replacing the mattress into the original space upon straps **23**.

The patient receives head harness **13** by placing cushioned area **36** under the chin and around the jaws to the back of the head. Chest harnesses **12** go over the shoulders, cross under the back then under the arms and back over the chest. Foot harnesses **14** are installed in the customary manner for traction. The straps are adjusted all around for the desired force in springs **28** and for the comfort of the patient.

Should the head or foot of the bed need tilting, sleeves **22** are loosened so that members **18** can turn. Sleeves **22** are tightened, and the harnesses readjusted are required.

What I now claim is:

1. In an articulated traction apparatus positioned within a bed frame and including head, waist and foot harnesses anchored to said apparatus and attachable to a patient, the improvement comprising:

A. a pair of generally rectangular upper and lower frame units having lateral and longitudinal sides;

B. a plurality of straps extending between said longitudinal sides parallel to said lateral sides of said lower unit;

C. each of said longitudinal sides of said lower unit having end pieces pivotally connected to a central member and defining the points of articulation of said frame;

D. a brace disposed at the extremity of each said end pieces, each said brace extending upwardly from respective ones of said end pieces and securing the upper and lower frame units;

E. a spring biased telescoping member on said upper frame unit disposed intermediate said braces of each said longitudinal side; and

F. means pivotally connecting the ends of each of said telescoping member to respective ones of said braces and means located on said upper frame lateral sides for connection to said head, waist and foot harness; whereby, said telescoping members exert a force upon said frame, which force tends to straighten said end pieces and said central members and establish tension on the harnesses strapped to a patient.

2. The apparatus as set forth in claim **1** including means for adjusting the spring bias of said telescoping members.

3. The apparatus as set forth in claim **2** further including lock means disposed within said telescoping members for immobilizing each said telescoping member.

4. The apparatus as set forth in claim **1** including lateral supports disposed intermediate corresponding ones of said braces.

5. The apparatus as set forth in claim **4** further including anchor members disposed intermediate said telescoping members for anchoring at least one of the harnesses.

* * * * *