United States Patent

[11] 3,592,975

[72] Inventor **Itsuki Ban**
829, Higashi-Oizumachi, Nerima-ku, Tokyo-to, Japan

[21] Appl. No. **716,833**
[22] Filed **Mar. 28, 1968**
[45] Patented **July 13, 1971**
[32] Priority **Mar. 30, 1967, Mar. 30, 1967**
[33] **Japan**
[31] **19552 and 19553**

[54] **AUTOMATIC PLAYING APPARATUS UTILIZING PLURALITY OF ENDLESS TAPE CARTRIDGES**
7 Claims, 9 Drawing Figs.

[52] **U.S. Cl.** ..... **179/100.2 Z,** 274/4 F
[51] **Int. Cl.** **G11b 5/54,** G11b 15/66, B65h 19/06
[50] **Field of Search** ..... 179/100.2 Z; 242/55.19, 198, 199, 200; 226/178, 179; 274/4 B, 4 D, 4 E, 4 F, 4 G

[56] **References Cited**
UNITED STATES PATENTS
2,568,734 9/1951 Heyer 242/55.19

Primary Examiner—Bernard Konick
Assistant Examiner—J. Russell Goudeau
Attorney—Nathan M. Briskin

ABSTRACT: The invention is directed to an automatic and remote-controllable playing apparatus utilizing a plurality of endless tape cartridges wherein a plurality of endless tape cartridges are releasably supported within a movable housing, a stop member is operable to be remote-controlled and arranged on a cabinet correspondingly opposite each of the endless tape cartridges, said housing being adapted to be retained by actuating said stop member when a preselected endless tape cartridge is brought in the play position, a capstan is synchronously and automatically brought into abutment with a pinch roller within each of cartridges to feed and drive an endless tape for reproduction, thereafter said capstan is automatically released from the pinch roller due to an end mark signal on the endless tape, a mechanism of said stop member for arresting movement of housing is brought into free condition to allow said housing to effect its movement to thus actuate said stop member whereby the endless tape is played within the cartridge which correspondingly faces to said stop member.

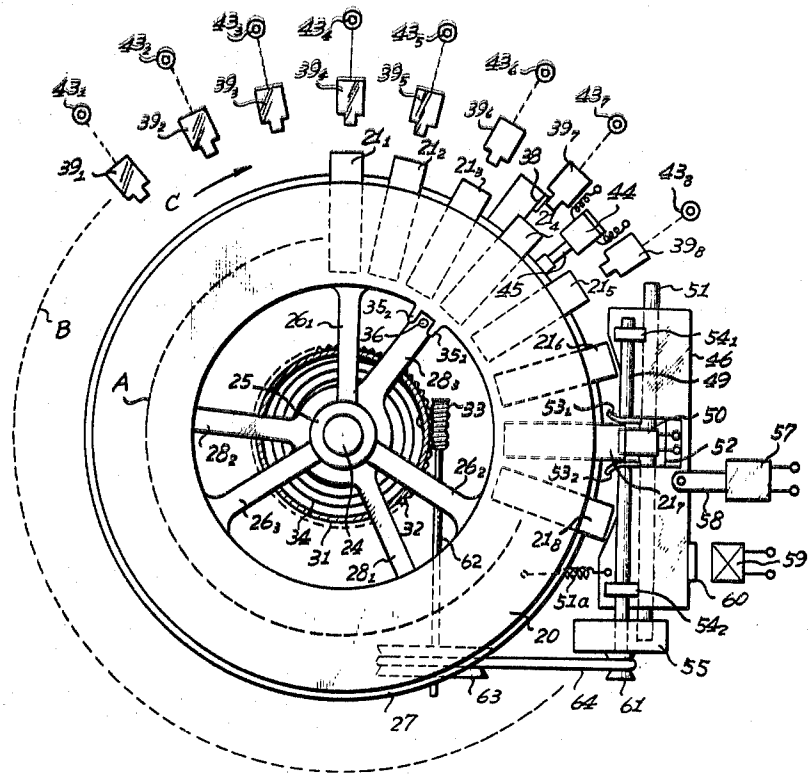

PATENTED JUL 13 1971

3,592,975

SHEET 1 OF 3

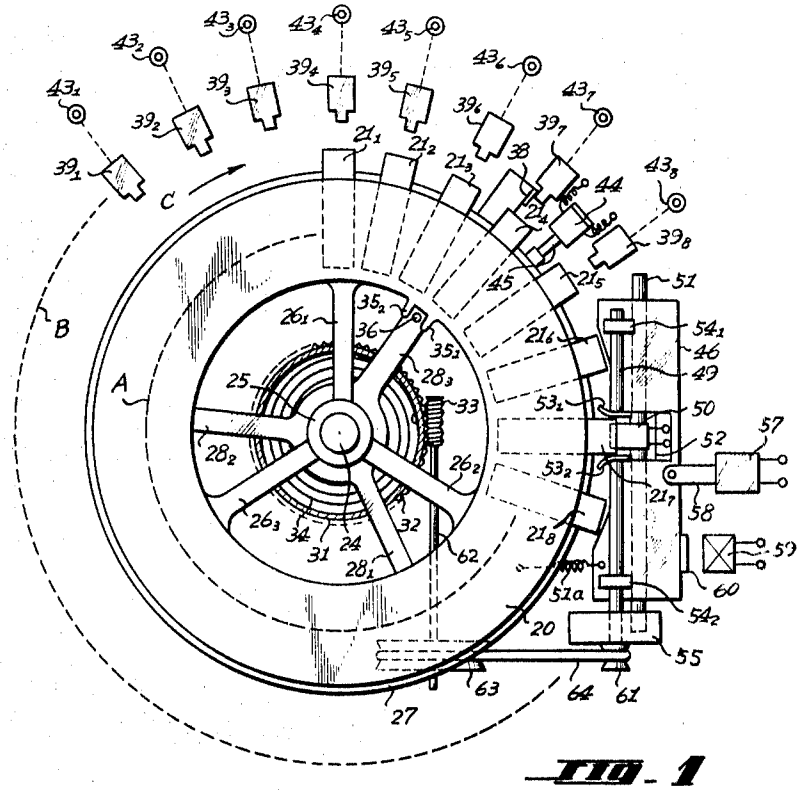

FIG. 1

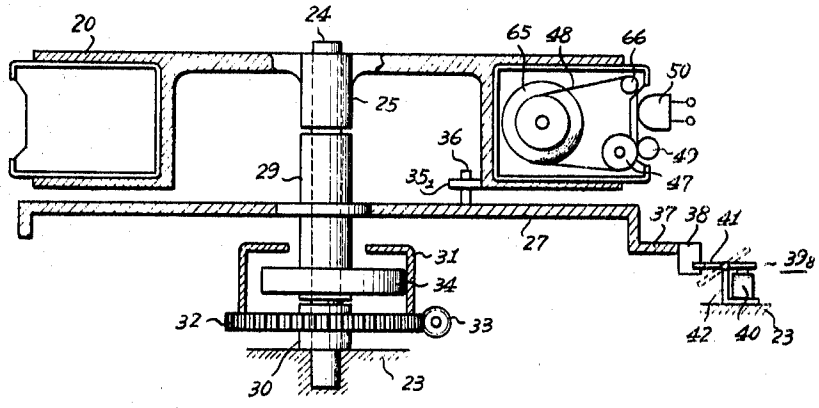

FIG. 2

INVENTOR
ITSUKI BAN

BY

ATTORNEY

Fig. 3

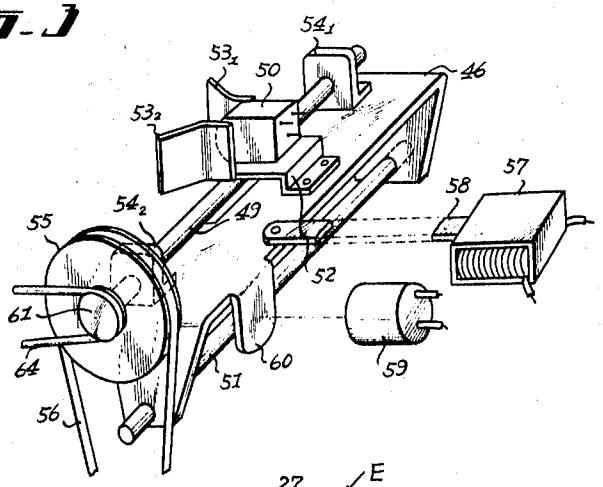

Fig. 4

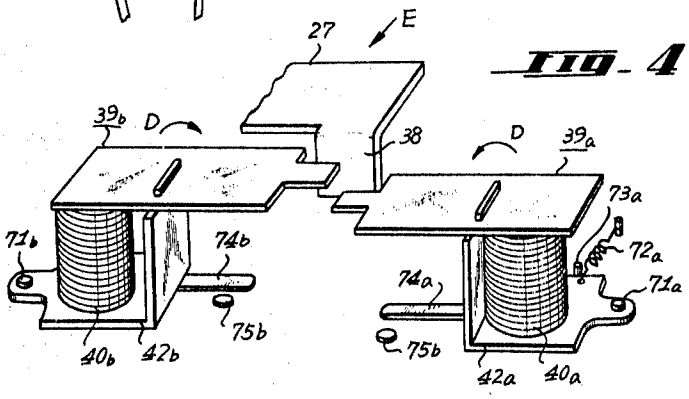

Fig. 6

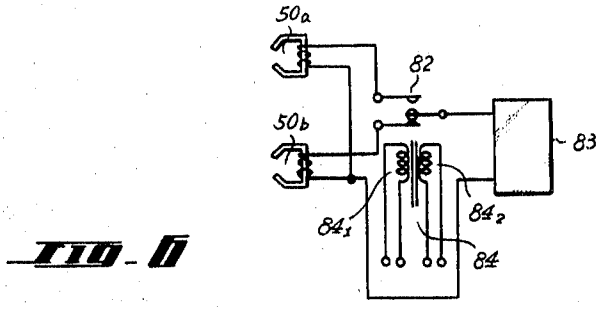

INVENTOR
ITSUKI BAN

BY

ATTORNEY

PATENTED JUL 13 1971

3,592,975

SHEET 3 OF 3

FIG. 6

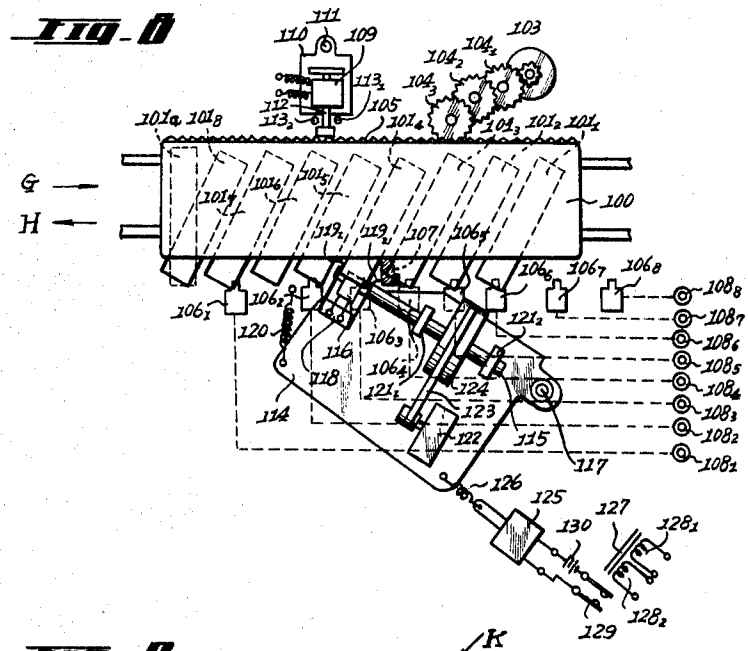

FIG. 9

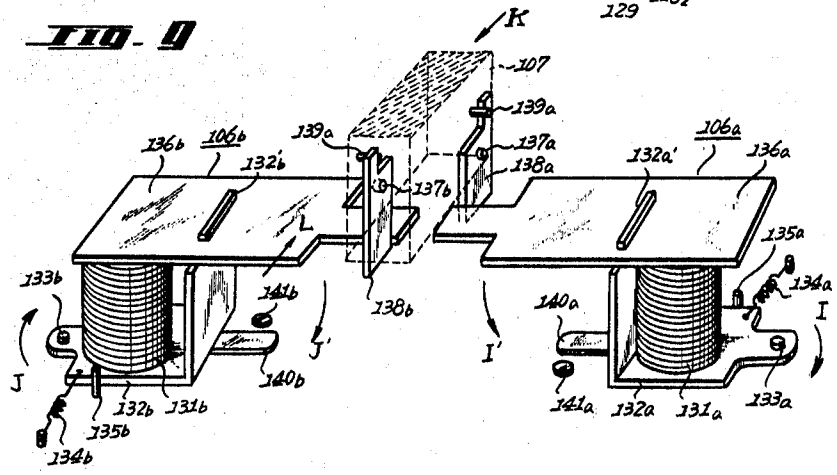

FIG. 7

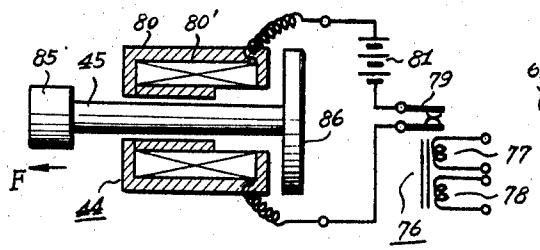

FIG. 8

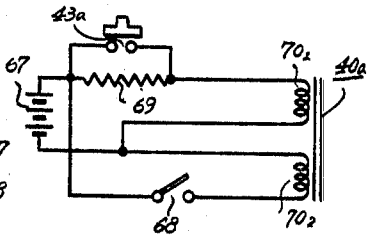

INVENTOR
ITSUKI BAN

BY

ATTORNEY

PATENTED JUL 13 1971

3,592,976

SHEET 1 OF 4

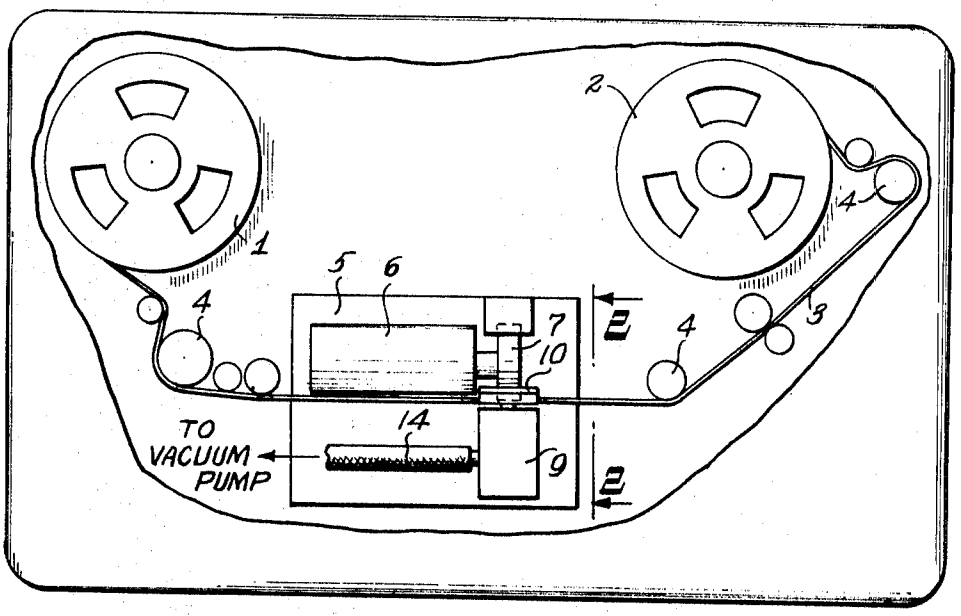

Fig. 1.

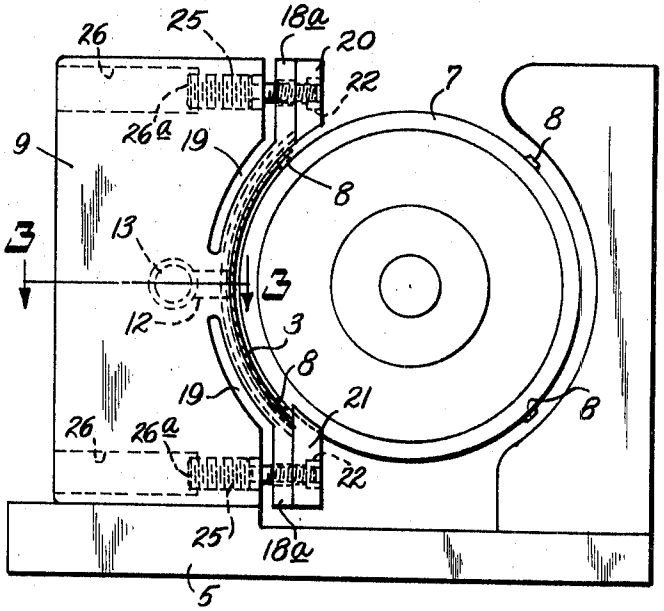

Fig. 2.

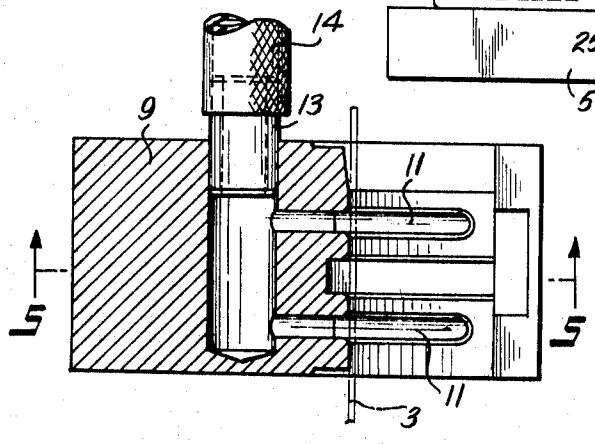

Fig. 3.

INVENTOR
JAMES J McGINNIS
BY J. Hanson Boyden,
ATTORNEY

AUTOMATIC PLAYING APPARATUS UTILIZING PLURALITY OF ENDLESS TAPE CARTRIDGES

BACKGROUND OF THE INVENTION

This invention relates to an automatic playing apparatus utilizing a plurality of endless tape cartridges, and, more particularly, to a new and improved apparatus that is capable of sequentially playing endless tape within selected cartridges which are stored in a movable housing.

The currently available automatic playing apparatus utilizing a plurality of endless tape cartridges are so typically designed that a pinch roller within the cartridge is brought into abutment with a capstan provided within a cabinet of the apparatus by depressing the cartridge when desired to thereby feed and drive the tape for its reproducing. Another recently developed automatic playing apparatus is provided with an electromagnetic plunger or the like so that the cartridge may be movable by cartridge drive means without manually depressing the cartridge. In the former apparatus of the type, it is impossible to automatically and successively play one cartridge after another. In the latter apparatus of the type cartridge drive means is required to be more complicated and expensive due to a great number of cartridges. Moreover, it is not possible to play automatically a plurality of tapes unless the magnetic heads and capstans should be in the same number corresponding to that of the cartridges.

In order to eliminate the defects as described in the above, briefly, the invention involves the recognition that a plurality of endless tape cartridges are stored within a movable housing and movement of the housing is arrested to automatically bring, in succession, a plurality of cartridges in the play position. Where a preselected cartridge is in the play position, movement of housing is automatically arrested so that a plurality of cartridges are readily played. Means for arresting movement of the housing has been so far proposed so that a plurality of push rods are arranged correspondingly opposite to each cartridge to allow the push rod to be depressed to project the top end from the housing and to engage the same with a raised portion or stop member. A disadvantage derived from the use of such means is that it is difficult to remote-control the depression of the push rod and that a mechanism for allowing movement of the housing and for releasing the pushrod from the stop member is required to be more complicated.

The requirements for the playing apparatus storing a plurality of cartridges therewithin is that, first, the cartridge is easily preselected, second, the tape or tapes are in succession played according to the program, and that, third, a sound track is preselected simultaneously with preselecting of the cartridge.

The automatic playing apparatus provided with the pushrods can meet with the second and third mentioned requirements but not first mentioned requirement due to the difficulty with remote-control.

According to the present invention, an automatic playing apparatus will meet with not only the second and third but also the first mentioned requirements.

SUMMARY OF THE INVENTION

It is a principal object of the invention, therefore, to provide an automatic playing apparatus wherein preselection of one cartridge after another is effected by applying electric pulse to a stop member, an arrest member for movement of the housing is actuated by engaging an engaging portion with a stopper, and thereafter the cartridge desired to be played is brought into the play position for its reproducing by actuating the arrest member to arrest movement of the housing.

Further object of the invention is to provide an automatic playing apparatus which is capable of performing desired cartridges in succession for automatic play according to the program by the use of a plurality of stop members which may be operable at the same time.

Another object of the invention is to provide an automatic playing apparatus which is so constructed that a swingable deck includes a magnetic head and a capstan in opposition to the cartridge in the play position, the capstan engaging a pinch roller within the cartridge is released from said pinch roller by swing of the deck to control the tape feed, said deck being driven by an end mark on the tape and being moved automatically away from the cartridge after completion of one cycle of the tape feed, and said deck allowing the housing to move for positioning a next preselected cartridge in the play position.

A still further object of the invention is to provide an automatic and remote-controllable playing apparatus which is adapted to sequentially play a plurality of tapes in a manner comparable to the automatic playing of the jukebox by the provision of a pushbutton switch or coin mechanism.

Further object of the invention is to provide an automatic playing apparatus which is capable of preselecting not only the cartridge but also the sound track.

Further objects and advantages of the invention will become apparent upon consideration of the specification and the following accompanying drawings, in which:

BRIEF DESCRIPTION OF THE DRAWINGS

FIG. 1 is a plan view partly in section of an automatic playing apparatus according to the invention;

FIG. 2 is a schematic side view in vertical section of the automatic playing apparatus shown in FIG. 1;

FIG. 3 is an enlarged perspective view of the deck shown in FIG. 1;

FIG. 4 is a perspective view illustrating the principal part of a stop member for preselecting the cartridge and sound track;

FIG. 5 is an electrical diagram used for self-reserving and for releasing the same of the electromagnetic coil shown in FIG. 4;

FIG. 6 is an electrical diagram used for changing over a magnetic head circuit;

FIG. 7 is a schematic view showing the structure of the electromagnetic plunger and the current supply circuit;

FIG. 8 is a view in vertical section of the electromagnetic plunger comprising an arrest member for arresting movement of the housing;

FIG. 9 is a plan view of a modified form of the automatic playing apparatus.

DESCRIPTION OF THE PREFERRED EMBODIMENTS

Referring now to the drawings and more particularly to FIGS. 1 and 2 thereof, numeral **20** designates an annular housing which releasably supports a plurality of cartridges 21_1, 21_2, 21_3, ... in a manner that the forward end thereof each is arranged in alignment with the periphery of the housing. The housing **20** is provided a plurality of openings to receive each cartridges therein. For the illustrative purpose, only the cartridges are shown from 21_1 to 21_8, however, it is assumed that remainder are stored in a portion of the housing. The housing **20** is bodily connected through support arms 26_1, 26_2, 26_3 to a bearing **25** which is rotatably supported on a shaft **24** mounted to a cabinet **23**. Accordingly, the housing **20** may be rotated about the shaft **24**.

Downwardly of the housing **20** is provided a rotary disc **27** which is rotatably supported through the support arms 28_1, 28_2, 28_3 and a bearing **29** on the shaft **24**. A cylindrical frame **31** is rotatably mounted through a bearing **30** to the shaft **24**. A gear **32** is integrally formed of the cylindrical frame **31** and a worm gear **33** is adapted to mesh with the gear **32**. The cylindrical frame **31** may be rotated by the worm gear **33** which is rotated in a manner as will be described later. Rotation of the cylindrical frame **31** is imparted through a coil spring **34** between the frame **31** and the bearing **29** to the rotary disc **27**. Mounted to the inner periphery of the housing **20** are two projections 35_1, 35_2 between which a pin **36** mounted to the arm 28_3 is interposed. The housing **20** is rotatable with the rotary disc **27** in a manner that an angular relationship is established

therebetween under the influence of the projections 35_1 and 35_2, and the pin **36**. Formed of a portion of the periphery of the rotary disc **27** is a flange **37** of which end is provided a detent **38**.

A plurality of stop members 39_1, 39_2, 39_3 ..... are arranged to correspond to the cartridges in a manner that they are in the vicinity adjacent to the detent **38** which is rotatable as the rotary disc **27** is rotated. These stop members are also arranged in B portion shown by the dotted lines of the Figure. Each stop member **39** comprises an electromagnetic coil **40**, a lock piece **41** which is attracted thereby, and a yoke **42** journaled to the lock piece. When the stop members 39_1, 39_2, 39_3 ..... are out of operation, the lock piece **41** is in the position shown by the dotted lines of FIG. **2**. When they are actuated, the lock piece **41** is moved to the position shown by the solid lines of FIG. **2**. A plurality of pushbutton switches 43_1, 43_2, 43_3 ..... are arranged to correspond to each stop member **39** to actuate the stop members by depressing the switches **43** to allow the electromagnetic coil to be energized. FIG. **1** shows that the stop member 39_7 is in the operating position and engaged with the detent **38** while the lock piece **41** is occupied within the range of rotation of the detent **38**. The lock piece **41** of the stop member in the operating position is also occupied in the position being away from the detent **38** so that the detent **38** is not engaged with the stop member in out of operation.

When the detent **38** is engaged with one of the stop members **39**, the stop member is swung since it is pivotally fixed to the cabinet **23**. This swingable movement closes the contact to energize an electromagnetic plunger **44** as the arrest member and an actuator **45** presses the periphery of the rotary disc **27** to terminate rotation of the rotary disc. As a result, rotation of the housing **20** through the pin **36** and the projection 35_1 toward direction of arrow C is arrested. In FIG. **1**, rotation of the housing **20** is arrested by engaging the stop member 39_7 with the detent **38** and the cartridge 21_7 associated with the stop member 39_7 is positioned in the play position.

Numeral **46** indicates a deck which includes a magnetic head engageable with the tape **48** and a capstan in abutment with a pinch roller **47** within the cartridge in the play position for feeding and driving the tape **48**. The deck **46** swingably supported on the shaft **51** is swung in the leftward direction as shown, and the capstan **49** is in abutment with the pinch roller **47** to initiate the tape feed while the magnetic head **50** abuts against the tape **48** for its reproducing. A spring **51***a* is provided to urge the capstan **49** and the pinch roller for securing engagement between the two. A magnetic head **50** is secured through a mount base **52** to the deck **46**. The mount base **52** is provided with guides 53_1 and 53_2 to hold the forward end of the cartridges to be selected and to define a certain relative position with respect to the magnetic head **50** and the cartridges. Since the housing **20** is maintained in an angular position in relation to the rotary disc **27** when the disc **27** is depressed to stop its rotation by means of the electromagnetic plunger **44**, the guides 53_1 and 53_2 allows the selected cartridges to be securely opposed to the magnetic head **50**. This will be effective as described later for preselecting two sound tracks on the tape within one cartridge.

The capstan **49** is supported through shafts 54_1 and 54_2 on the deck **46** and is rotated by an electric motor (not shown) through a flywheel **55** on the deck and a belt **56**, see FIG. **3**, wound to the flywheel. An actuator **58** of an electromagnetic plunger **57** is connected to the deck **46** so that the deck **46** is swingably moved in the direction being away from the cartridge positioned in the play position. The electromagnetic plunger **57** is pulsatively energized by a detector (not shown) for searching the end mark on the tape **48**. Actuation of the electromagnetic plunger **57** causes the deck **46** to be away from the cartridge, and a magnetic substance **60** of the deck **46** closes to a magnetic circuit open end of an electromagnetic coil **59** to which DC current is applied so that the magnetic circuit is closed to allow the electromagnetic coil **59** to attract the deck **46**. The end mark signal on the tape through a relay (as will be described later) deactuates energization of the electromagnetic plunger **44** to release the rotary disc from its engagement.

In the position where the deck **46** is attracted by the electromagnetic coil **59**, a belt **64** interposed between a pulley **61** pivoted to one end of the capstan **49** and a pulley **63** journaled to one end of a connecting link **62** for the worm gear **33**, is tensioned to impart rotation of the capstan **49** through the pulley **61**, belt **64**, pulley **63**, connecting link **62**, worm gear **33**, and the gear **32** to the cylindrical frame **31** to rotate the same and the rotary disc **27** is rotated through the coil spring **34**, bearing **29** in the direction of arrow C while the casing **20** is rotated through the pin **36** and projections 35_1 and 35_2 in the same direction. Swing of the capstan due to the swingable deck may be available in place of power transmission according to tension of the belt for effecting power transmission by means of an idler.

Referring to FIG. **2**, numeral **65** designates a rotatable base in which the tape **48** is reeled and numeral **66** indicates a guide which enables the tape **48** to run along with the forward end of the cartridge.

For illustrative purpose, FIG. **3** shows an enlarged perspective view of the deck illustrated in FIGS. **1** and **2** wherein like part and parts are represented by like numerals, and it will not be necessary to describe them in detail therein.

FIG. **4** shows the stop member for the housing **20** when use for the cartridge storing the tape on which two sound tracks are provided. Like part and parts shown in FIG. **4** correspond to the same numbered part and parts in FIGS. **1** and **2**.

In this embodiment, two stop members **39***a* and **39***b* are provided to be correspondingly associated with one cartridge and each of the stop members is adapted to select one of the magnetic tracks. Numerals **40***a* and **40***b* designate electromagnetic coils which include yokes **42***a dn* **42***b* as magnetic circuit therefor. Lock pieces **41***a* and **41***b* which serve for the yoke are rotatably supported on the yokes **42***a* and **42***b* at the ends thereof.

The electromagnetic coils **40***a* and **40***b* includes two coils and one of the electromagnetic coils, namely, **40***a* is shown in FIG. **5** for illustrative purpose of the circuit therefor.

In opposition to a power supply **67**, and the push rods 43_1, 43_2, 43_3 ..... , a pushrod contact **43***a*, contact **68**, resistor **69** and coils 70_1 and 70_2 are connected as shown in FIG. **5**. Accordingly, the coil 70_1 is preenergized through the resistor **69** but not enough to attract the lock piece **41***a*. When the pushrod contact **43***a* is closed, the resistor **69** is short-circuited thereby to apply high current to the coil 70_1 to cause the lock piece **41***a* to be attracted as shown in FIG. **4** and the stop member **39***a* is brought in operating condition. Attraction of the lock piece **41***a* closes its magnetic circuit so that such the attraction thereof is maintained when the pushrod contact **43***a* is opened after closing thereof and current applied to the coil 70_1 decays. It should be noted that each of the lock pieces **41***a* and **41***b* has a spring (not shown) wound thereto and is swingably urged in the direction of arrow D.

Now, contact **68** is closed in a manner as will be described later, current is applied to the coil 70_2 so that when the direction of magnetic flux generated in the coil 70_2 is reverse to that of the magnetic flux generated in the coil 70_1, both magnetic flux are offset to release the lock piece **41***a* from attraction for returning it to its normal position. The foregoing is also the case with the stop member **39***b*.

The stop members **39***a* and **39***b*, see FIG. **5** are supported to rotate about points **71***a* and **71***b* and either clockwise or counterclockwise urged by the bias of springs (not shown). Stopper pins (not shown) are provided to arrest swing of these stop members. The stop members **39***a*, **39***b* are arranged to allow the detent **38** of the rotary disc **27** rotating from the direction of arrow E to primarily engage the lock piece **41***b* of the stop member **39***b*. When the detent **38** is engaged with the lock member **41***b*, the lock member is depressed and the stop member **39***b* is rotated against the spring (not shown) about the point **71***b* to thus a conduct piece **74***b* bring into abutment with a contact **75***b*. The conductive piece **74***b*, contact **75***b*

correspond to the contact 68 shown in FIG. 5. Attraction of the lock piece 41*b* is released to return it to its normal position and to release the same from the detent 38. The conductive piece 74*b*, contact 75*b* occupied at the stop member 39*a* corresponds to the conductive piece 74*a* and the contact 75*a*.

The conductive piece 74*b* and the contact 75*b* are incorporated in a current supply circuit for one exciting coil 77 of a relay 76 controlling actuation of the electromagnetic plunger 44 shown in FIG. 7. The conductive piece 74*b* actuates the relay 76 to close a contact 79. The contact 79 is arranged between a power source 81 and an exciting coil 80 of the electromagnetic plunger 44 so that closing of the contact 79 actuates the electromagnetic plunger 44 to press against the rotary disc 27 and arrest rotation thereof. The electromagnetic coil 59 for attracting the deck 46 also provides two coils (not shown), the first coil to which DC current is normally applied. When current is applied through the contact (not shown) of the relay 76 which is in operating condition, magnetic flux generated in the second coil and that in the first coil are offset, the deck 46 is returned by the bias of the spring 51*a* and the capstan abuts against the pinch roller 47 to initiate the tape feed for reproducing of the tape 48. The details of the sound track to be selected are shown in FIG. 6.

Two pickup coils 50*a* and 50*b* are included in the magnetic head. In case of stereophonic apparatus, more pairs of pickup coils are required to this end so that two independent stereoheads may be employed. Each pickup coil is connected through a switchover contact 82 to an amplifier 83. Thus, one of the first and second track is selected by the switchover contact 82 to correspond to one of the pickup coils. The switchover contact 82 is changed over by a relay 84.

A coil 84_1 of the relay 84 is energized in a manner to control current supply by switch means including the contact 75*b* and the conductive piece 74*b* which are closed by rotation of the stop member 39*b* when the stop member abuts against the detent 38. At the same time, the coil 84_1 is self-reserved by a self reserve circuit (not shown) and the pickup coil 50*b* is connected to the amplifier and changed over. As a result the second sound track is to be played.

Application of the tape end mark signal current to the coil 84_2 offsets magnetic flux generated in the coil 84_1 and releases the relay 84 from self reserving to thus return the switchover contact 82 to its normal position for reproduction of the first sound track. In the meantime, the tape end mark signal current is drained to the coil 78 of the relay 76 controlling current supply for the electromagnetic plunger 44 to offset magnetic flux generated in the coil 77 so that arrest of the rotary disc 27 by the electromagnetic plunger 44 is released.

Further, the end mark signal actuates the electromagnetic plunger 57, and the deck 46 is away from the cartridge at the same time the capstan 49 is released from the pinch roller 47 to terminate the tape feed. Accordingly, the belt 64 extending from the pulley 61 and 63 is tensioned to rotate the rotary disc 27 and to engage the detent 38 the lock piece 41*a* of the stop member 39*a*. Thereafter, the same operation is performed as described in the foregoing, the contact point 74*a* and the contact 75*a* are temporarily closed and the stop member 39*a* is returned while the rotary disc 27 terminate its rotation under the influence of the electromagnetic plunger 44. The deck 46 is released from the electromagnetic coil 59 to initiate the tape feed for reproduction of the first sound track.

At this point, the position relative to the deck 46 (assuming that it is the position of the magnetic head 50) and the cartridge to be selected is somewhat different of the position in case of the second sound track, however, the cartridge may be placed in position by the guides 53_1 and 53_2. This entirely depends on the arrangement of the housing 20 having an angular relationship to the rotary disc 27 in accordance with the pin 36. As the case may be, the electromagnetic plunger 44 may directly urge against a portion of the housing 20 without use of the rotary disc 27, however, in this case, the electromagnetic plunger 44 is not mounted to the cabinet but arranged to be angularly rotated with the housing 20.

The end mark signal appears on the first sound track, and the electromagnetic plunger 57 is energized to let the capstan 49 be away. Accordingly, arrest of the rotary disc 27 is released to initiate its rotation until the disc is engaged with the stop member corresponding to the next cartridge to be selected, and the same operation is going on as described in the above.

In this manner, by depressing a desired one out of the push rods 43_1, 43_2, 43_3 ..... the tape received in the cartridge corresponding thereto is automatically played according to the program and thus the purpose of the invention is accompanied.

As is apparent from the foregoing, two sound tracks on the tape may be independently or successively played. When more than two sound tracks are desired to be played, this may be obtained by increasing components to correspond to the additional tracks. In combination with a slot machine, the apparatus according to the present invention will serve for a jukebox.

The details of the structure of the electromagnetic plunger 44 and the current supply circuit therefore will be explained, see FIG. 7.

Numeral 80 indicates a yoke in which an exciting coil 80' is stored. A column shaped actuator 45 made of magnetic substance is provided to pass through the central portion of the yoke 80. A rubber terminal 85 is mounted to one end of the yoke 80 and a magnetic disc 86 is secured to the other end thereof. When the magnetic coil is energized by the relay 76, the disc 86 is attracted to the yoke 80 to move the terminal 85 in the direction of arrow F. Accordingly, the rubber terminal 85 abuts against the periphery of the rotary disc 27 to terminate its rotation.

The changeover of the sound track is effected by means of the changeover of the circuit shown in FIG. 6. However, it is also effected by the use of a rotary solenoid instead of the relay 84 in the manner that the magnetic head 50 is moved at an interval corresponding to the width of the sound track.

The difference between the foregoing embodiments and that now shown in FIG. 8 lies in that the housing is formed into a rectangular shape and which is adapted to be vertically moved. Referring to FIG. 8, the housing 100 receives a plurality of cartridges 101_1, 101_2 ..... 101_8 therewithin and is reciprocally supported on guides 102_1 and 102_2. The housing 100 is adapted to be moved in the directions of arrow G or H by means of an electric motor 103 and gear trains 104_1, 104_2, 104_3 and 105. A spring motor may be employed in place of an electric motor. The electric motor 103 is required to include a mechanism for reversing the housing when it is moved at a predetermined distance. The gear 105 is arranged along with the longitudinal side of the housing 100. The cartridge 101_1, 101_2, ... 101_8 are diagonally received within the housing as shown. Conventionally, the cartridges are arranged to be perpendicular to the path of travel in relation to the housing, as shown by the dotted lines 101*a*. Under such a parallel arrangement in a row, a diameter of a flywheel is required to be large so that it is impossible to abut a capstan against a pinch roller by moving a capstan. Disadvantage derived from the parallel arrangement is eliminated by employment of a diagonal arrangement of the cartridges. Further, according to this arrangement, a distance at which the capstan is moved is short and dimensions of the playing apparatus are relatively compactness. In addition to, operation of the apparatus may be performed by low current so that an electromagnetic plunger as a drive source is simplified.

Numerals 106_1, 106_2 ..... 106_8 designate stop members against which a detent 107 projecting from a portion of the housing 100 abuts and which are arranged to correspondingly opposite relative cartridges. Operation of the stop member 106 is same as that of the stop member 39 as shown in the foregoing embodiments. Numerals 108_1, 108_2, ... 108_8 indicate push rods which are provided to actuate the stop members. An electromagnetic plunger 109 is mounted to a mount base 110 supported on a shaft 111 to arrest movement of the

housing **100**. Energization of the electromagnetic plunger **109** causes an actuator **112** to depress the housing **100** and arrest movement of the housing. This opens the current supply circuit for the electric motor **103**. Current supply to the motor **103** is controlled by a contact mechanism (not shown) which is opened or closed in response to actuation of the actuator **112** of the plunger **109**.

Spaced apart stopper pins 113_1, 113_2 are mounted to the cabinet at sides of the actuator **112** of the plunger **109**. With this arrangement, the housing **100** may be reciprocally movable between the stopper pins 113_1 and 113_2. A deck **114** provided with a capstan **115** and a magnetic head **116** is clockwise swung around a shaft **117** to abut the capstan **115** against a pinch roller (not shown) within the cartridge in the play position. At this point, guides 119_1 and 119_2 mounted to a support base **118** of the magnetic head **116** hold the cartridge 101_4 to be selected therebetween in position. Under the structure as mentioned in the foregoing, a relative position with respect to the magnetic head **116** and the cartridge 101_4 is constantly maintained so that tone quality of the reproduction is improved and abutment of the sound track with the magnetic head is completely secured. Abutment force is applied by a spring **120** to the capstan and the pinch roller. Bearings 121_1 and 121_2 for the capstan **115** and an electric motor **122** are mounted to the deck **114** and a flywheel is rotated through a belt **123** by the electric motor **122**. An electromagnetic plunger **125** is connected through a spring **126** to the deck **114**. Coils 128_1 and 128_2 which are wound to a relay **127** control a contact thereof and current applied to the plunger **125** from a power source is controlled. That is, tape end mark signal current is drained to the coil 128_2 to close a contact **129** at the same time the relay **127** is self-reserved. Accordingly, the electromagnetic plunger **125** attracts the deck **114** and rotate it counterclockwise to let the capstan **115** be away from the pinch roller for terminating the tape feed.

When the detent **107** provided on the housing **100** abuts against the stop member as the housing **100** is moved in the direction of arrow G for selecting the magnetic track, current is applied to the coil 128_1 of the relay **127**. Coils 128_1 and 128_2 are so wound to generate magnetic fluxes in the opposite directions, respectively, so that self-reserve of the relay **127** is released and current applied to the plunger **125** is deenergized. Accordingly, the deck **114** is clockwise rotated under the influence of the spring **120** and the capstan and the magnetic head abut against the pinch roller to effect reproduction of the tape.

It should be noted that the operation of this embodiment is apparent from that of the other embodiments as previously mentioned.

According to the embodiment shown in FIG. **8**, the housing **100** is rectilinearly reciprocated so that the structure of the stop member is somewhat modified as will be described later when using the cartridge storing the tape on which the two tracks are provided.

Numerals **106***a*, **106***b* designate stop members of which one namely, **106***a* corresponds the stop member **106** shown in FIG. **9**. The stop members **106***a dn* **106***b* corresponding to those 106_1, 106_2 ..... shown in FIG. **8** are parallel arranged on the housing **100** and are provided with the electromagnetic coils **131***a* and **131***b*. Yokes **132***a* and **132***b* are provided with shafts **133***a* and **133***b* at portions thereof and are rotatably supported on the cabinet. A spring **134***a* urges the yoke **132***b* in the direction of arrow I and swingable rotation of the yoke is arrested by a pin **135***a* while a spring **134***b* urges the yoke **132***b* in the direction of arrow J and swingable rotation thereof is arrested by a pin **135***b*.

Numerals **136***a*, **136***b* indicates lock pieces which are rotatably supported around pivot points **132***a'*, **132***b'* and are urged springs (not shown) in the direction of arrows I' and J', respectively. Now, the electromagnetic coils **131***a* and **131***b* are energized, the lock pieces **136***a* and **136***b* are attracted thereto as shown and each end thereof has the level where each abuts against each of rotary plates **138***a* and **138***b* is supported by each of shafts **137***a* and **137***b* on the sides of the detent **107** provided on the housing **100**. The rotary plates **138***a*, **138***b* are rotated by pins **139***a*, **139***b* mounted to the detent **38** in one direction and so adapted as not to be rotated in the reverse direction, however, they are rotated in opposite directions.

When the detent **107** shown by the dotted lines is rotated with movement of the housing **100** from the direction of arrow K, the rotary plate **138***b* primarily abuts against the lock piece **136***b* and is further rotated to be away from the lock piece **136***b* while the other rotary plate **138***a* abuts against the lock piece **136***a* and rotation of the plate **138***a* is arrested by the pin **139***a* to depress the lock piece **136***a* and to rotate the stop member **106***a* against the bias of the spring **134***a*. This causes a conductive piece **140***a* to abut against a contact **141***a*.

When the detent **107** approaches from the direction of arrow L by movement of the housing in the direction of arrow H, see FIG. **8**, the rotary plate **138***b* abuts against the lock piece **136** and depresses it to rotate the stop member **106***b*. This caused a conductive piece **140***b* to abut against a contact **141***b*.

The operation derived from engagement of the conductive piece with the contact and the details of the electromagnetic coil, switchover for the sound track are all the same as those in the foregoing embodiment so that they may be omissive together with the drawing.

As seen from the drawings, namely, FIGS. **8** and **9**, the cartridges are diagonally arranged in the housing so that it is possible to advantageously shorten the length of the capstan as much as possible.

The present invention thus provides highly effective playing apparatus for preparing a desired program by virtue of stop means.

Other modifications will be apparent to those skilled in the art. The invention, therefore, is intended to encompass all modifications falling within the scope of the following claims.

I claim:

1. An automatic playing apparatus utilizing a plurality of endless tape cartridges, comprising a housing adapted to store a plurality of endless tape cartridges and to move each of said cartridges into the play position; means for moving said housing; a detent on said housing; a stop member associated with each cartridge adapted to index the associated cartridge in the play position when the stop member is actuated, each stop member comprising an electromagnetic coil and a lock piece movable from a normal position to an operating position by magnetic attraction of said lock piece to said electromagnetic coil; said lock piece being engageable with said detent when the lock piece is in said operating position; an operating means associated with each of said stop members for applying electric current to an electromagnetic coil of the associated stop member for maintaining said lock piece in said operating condition; an electric contact adapted to close in synchronism with abutment of said detent with one of said stop members; an electrical circuit for offsetting flux generated in said stop member electromagnetic coil thereby returning said lock piece to its normal position, said electrical circuit being actuated by the closing of said electric contact; an electromagnetic plunger for arresting movement of the housing and being adapted to be in operating condition by energization thereof in response to the closing of said electric contact, a swingable deck including a capstan and a magnetic head; deck driving means operable in response to the closing of said electric contact for causing said capstan to abut against a pinch roller in a cartridge in the play position and to swing said magnetic head in the direction where said magnetic head is engaged with tape in a cartridge in the play position; means for sensing an end mark on a tape; said deck driving means being adapted to swing said deck away from the cartridge in the play position in response to detection of said end mark on the tape; and means for releasing said electromagnetic plunger from its operating condition in response to detection of said end mark on the tape; said stop members being actuated through said operating

means to index one or more tapes to be automatically played in a predetermined sequence.

2. An automatic playing apparatus in accordance with claim 1 wherein said housing is of annular shape rotatable about a rotary shaft in one direction and radially storing a plurality of endless tape cartridges in a manner that the forward end thereof is aligned with the periphery of said housing, said housing being provided with a rotary plate in angular relationship therewith, said rotary plate having said detent thereon, and said rotary plate being rotatable by actuation of said housing driving means.

3. An automatic playing apparatus in accordance with claim 2 wherein the two of said stop members are provided for each cartridge within the housing, said magnetic head has two pickup coils, switch means for effecting switchover of the contact when either of the two stop members abuts against the detent of the housing, and there is provided sound track switchover means for applying the output of the two pickup coils of the magnetic head corresponding to the two sound tracks on the tape to a reproduction amplifier after the output of said pickup coils is changed over by said switch means.

4. An automatic playing apparatus in accordance with claim 2 wherein said housing driving means comprises a downwardly extending cylindrical bearing provided at the center of the rotary plate of the housing, coil springs, one of said coil springs being wound to a rotatable cylindrical frame embracing said bearing, a gear arranged on said cylindrical frame, a pulley with a worm gear meshing with said gear, a second pulley coupled to the capstan disposed on said deck, a belt interposed between said two pulleys, an electric motor rotating said capstan, and said belt being tensioned by moving said deck away from the cartridge in the play position whereby rotation of the capstan rotates said rotary plate.

5. An automatic playing apparatus in accordance with claim 2 wherein the stop member electromagnetic coil includes a coil attracting the lock piece once impulse of high current is applied to said coil and maintaining said attraction under normally flowing low current after decay of said impulse current; a second coil to which such current is applied to offset flux generated in the first mentioned coil in response to the detection of the end mark on the tape; said electric contact comprises a contact disposed on the yoke of the electromagnetic coil of the stop member and a fixed contact, said contacts being connected by swingable movement of said yoke due to abutment of the lock piece with the detent of the housing; said deck driving means includes a coil normally energized for magnetically attracting a portion of the swinging deck to hold said deck in the retracted position and a second coil arranged to generate flux offsetting generated in said first coil in response to the detection of the end mark on the tape, and a spring biasing the deck in the direction of the cartridge.

6. An automatic playing apparatus in accordance with claim 1 wherein said housing is of rectilinear shape and is provided with guides to reciprocate the housing linearly along its longitudinal axis, and said cartridges are diagonally received within the housing toward the direction of movement of the housing.

7 An automatic playing apparatus in accordance with claim 6 wherein two of said stop members are provided for each of the cartridges within the housing, one of said stop members or the other being adapted to abut against the detent of the housing when the housing is moved in one direction or the reverse direction, said magnetic head has two pickup coils, switch means is provided for changing over the contact in response to the direction of movement of the housing and there is provided sound track switchover means for applying the output of the two pickup coils of the magnetic head corresponding to the two sound tracks on the tape to a reproduction amplifier after changing over said output through said switch means.