No. 613,323. Patented Nov. 1, 1898.

B. C. SCOTT.

CHAIR SUPPORT.

(Application filed May 5, 1898.)

(No Model.)

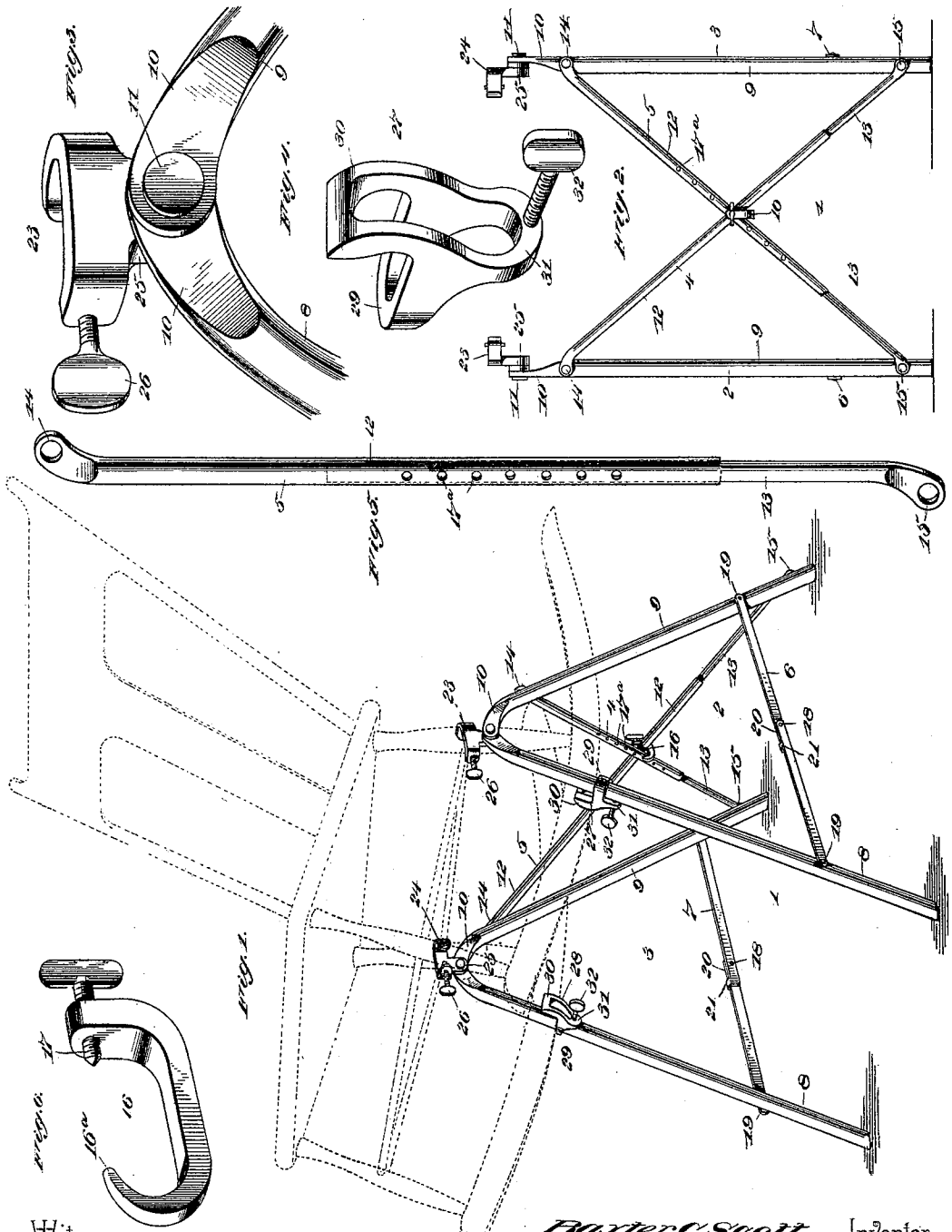

Witnesses
Wm. F. Doyle,
H. J. Bemberg

Baxter C. Scott, Inventor
By his Attorneys.
C. A. Snow & Co.

THE NORRIS PETERS CO., PHOTO-LITHO., WASHINGTON, D. C.

UNITED STATES PATENT OFFICE.

BAXTER C. SCOTT, OF FRENCH CAMP, MISSISSIPPI.

CHAIR-SUPPORT.

SPECIFICATION forming part of Letters Patent No. 613,323, dated November 1, 1898.

Application filed May 5, 1898. Serial No. 679,789. (No model.)

To all whom it may concern:

Be it known that I, BAXTER C. SCOTT, a citizen of the United States, residing at French Camp, in the county of Choctaw and State of Mississippi, have invented a new and useful Chair-Support, of which the following is a specification.

My invention relates to improvements in chair-supports by which an ordinary chair may be held at a proper height and angle for the performance of dental, surgical, and other kinds of work; and the primary object that I have in view is to provide a portable foldable support adapted to securely hold an ordinary chair in an elevated position.

A further object of the invention is to provide a support which may be adjusted to receive chairs of different widths and also to provide means for holding the support firmly in the position to which it may be adjusted.

A further object of the invention is to construct the base in a manner to adapt it to compactly fold together and take up a minimum amount of room, thus rendering the structure easy of transportation and convenient to store, and, finally, to simplify the construction, promote its convenience of adjustment, and render it cheap of manufacture.

With these ends in view the invention consists in the novel combination of elements and in the construction and arrangement of parts, which will be hereinafter fully described and claimed.

To enable others to understand the invention, I have illustrated the preferred embodiment thereof in the accompanying drawings, forming a part of this specification, and in which—

Figure 1 is a perspective view of my improved support, illustrating a chair applied thereto by dotted lines. Fig. 2 is a rear elevation, partly in section. Fig. 3 is a detail perspective view of the joint between the upper part of two of the legs and one of the swiveled clamps. Fig. 4 is a detail perspective view of one of the vertically-adjustable clamps. Fig. 5 is a detail view of one of the extensible braces. Fig. 6 is a detail perspective view of the clamp by which the rear extensible braces may be held against collapsing.

Like numerals of reference denote like and corresponding parts in each of the several figures of the drawings.

My chair-support is designated in its entirety by the numeral 1 in the accompanying drawings, and, briefly stated, it consists of the foldable side frames 2 and 3, the extensible braces 4 5, which adjustably connect the two side frames together, the hinged braces 6 and 7, attached to a pair of legs, each forming one of the foldable side frames, and novel constructions of the chair-clamps attached to the side frames.

Each side frame 2 and 3 consists of two legs 8 and 9, preferably made of tubular metal and flattened at their upper ends, as at 10, for the purpose of having said flattened ends of the legs overlap each other and enable a pivot-bolt or pintle 11 to pass through the flattened overlapped ends 10, and thereby join the legs 8 9 pivotally together.

The extensible braces 4 and 5 connect the two side frames 2 and 3 at the rear of the chair-support, and these braces are designed to hold the side frames firmly in their adjusted positions. The braces 4 and 5 are extensible to render the side frames adjustable laterally with respect to each other, thus accommodating the improved support to chairs of different widths, and said extensible braces are adapted to unfold and to fold with the side frames. Each brace 4 and 5 is in two parts, one of which is tubular, as at 12, and the other member or section 13 is solid and fitted in the tubular member to slide or telescope therein. The tubular member 12 of each brace is pivotally attached, as at 14, to the upper part of one leg forming a part of one side frame, while the solid member 13 of each brace is pivoted, as at 15, to the lower part of one of the legs forming a part of the other side frame of the support. The extensible braces are thus connected to the side frames of the support and they are arranged diagonally across from one side frame to the other, so that the two braces cross or intersect one another at the rear side of the support. The members of the telescopic or extensible braces 4 and 5 are held adjustably together by a suitable clamp, and in the drawings this clamp 16 is shown in the form of a yoke with a pointed end 16^a to be fitted in one of the series of apertures 17^a, formed in the tubular member or section 12 of one brace, while the clamp carries at its other end a binding-screw 17, which may fit in one of the apertures in the

telescopic member of the other brace, whereby the clamp may rigidly hold the two braces in their extended positions.

Each side frame has its foldable legs held apart in their open positions by a hinged brace 6 or 7, which is foldable with said legs and is adapted to hold the side frames steadily in its opened position. Each brace is in two parts, which are pivoted together, as at 18, and the outer ends of the brace members are pivoted at 19 to the respective legs of the side frame. One member of the hinged brace is extended beyond the pivot 18 to produce a short arm 20, and this arm at its free end is formed with a locking-lip 21, which is adapted to fit the upper edge of the other member of the hinged brace, and thus limit the opening movement of the legs when the brace is adjusted to a position where its two members are in line with each other.

To provide for the proper support of an ordinary chair or rocker on the foldable frames of the chair-support, I employ a series of clamps in which the chair is adapted to be securely fixed, so as to be sustained by the support in an elevated position above the floor and to be inclined or canted at an angle convenient for the performance of dental, surgical, and other kinds of work.

The clamps which engage with the bottom or rounds of the chair are indicated by the numerals 23 and 24 in the drawings, and each of these clamps has a swiveled connection with the apex of one of the side frames. Each clamp is a single casting in the form of a jaw to make it readily applicable to the bottom or frame of a chair, and the clamp is formed with a laterally-extending short arm 25, which is arranged to lap the pivotal joint between the legs of the side frame. The clamps 23 24 have swiveled connections with the side frames by extending the hinged bolts or pintles 11 through the short arms 25, and the clamps are thus loosely attached to the side frames by the same hinge-bolts or pintles which connect the legs in pairs, whereby the clamps are adapted to move or turn on the hinge-bolts 11 without affecting the spread positions of the legs forming the side frames and which are held steadily in place by the hinged and extensible braces. The swiveled clamps 23 24 are thus adapted to be adjusted to inclined positions in order to support an ordinary chair or rocker at an angle on the support convenient to the operator for performing work on the patient seated in the chair, and to securely hold the chair in the swiveled clamps they are provided with binding-screws 26, which find threaded bearings in the lower parts of the clamps, so as to be adjusted across the throat or space within the jaw of the clamp.

Each side frame 2 and 3 is furthermore equipped with a vertically-adjustable clamp, and in the drawings the clamps for the two frames are indicated by the numerals 27 28. These vertically-adjustable clamps are fitted loosely on the front legs of the side frames, and each clamp is constructed to embrace the lower end of an ordinary chair-leg or to receive the rocker of an ordinary rocking-chair. In the preferred embodiment of the invention each vertically-adjustable clamp is cast in a single piece of metal to produce a horizontal loop 29, an upper bearing-plate 30, and a lower bearing-loop 31, said loop lying in a vertical plane between the upper bearing-plate 30 and the horizontal loop 29. Each vertically-adjustable clamp is provided in its lower bearing-loop 31 with a transverse threaded aperture, in which is screwed an adjustable binding-screw 32, which is adapted to impinge against a leg of a side frame to hold the clamp at the desired vertical position thereon.

To use my improved support, the side frames are unfolded to spread the legs thereof apart, and during such unfolding of each frame the hinged brace is extended until the locking-lip on the short arm thereof abuts against the other member of such brace, thus holding the legs of the side frames in their unfolded positions. The side frames are now moved laterally away from each other a distance equivalent to or greater than the width of the chair, and during such lateral adjustment of the two side frames the extensible braces 4 and 5 are drawn outwardly and turned on their pivotal connections with the frames. The chair is now adjusted to have its bottom or two of its rounds fit in the swiveled clamps 23 24, and the legs of the chair enter the space between two legs of the side frames and the upper bearings 30 of the clamps 27 28, the lower extremities of the chair-legs resting on the lower bearing-loops 31 of said vertically-adjustable clamps. It will be unstood that the clamps 27 and 28 may be raised on the legs of the side frames to hold the chair in the elevated and inclined position desired by the operator, and after proper adjustment of the chair shall have been attained the screws 26 and 32 are adjusted to confine the chair securely in the clamps 23 24 and to hold the clamps 27 28 in their adjusted positions on the side frames. In case it is desired to use a rocking-chair in my support the seat-frame or bottom of the chair occupies the jaw-formed clamps 23 24, while the rockers of the chair rest upon the clamps 27 28 in the spaces between the side frames and the upper bearings 30.

The chair may be readily detached from the base by releasing the clamping-screws 26 and lowering the clamps 27 28, after which the side frames may be separated slightly to permit the chair to be easily removed. By breaking the joints between the hinged braces and removing or releasing the clamps between the members of the extensible braces the side frames can be drawn together into close relation and the legs thereof folded com-

pactly together, the extensible and hinged braces folding with the side frames and the legs thereof.

In using my support for holding a rocking-chair the clamps 30 form a seat for the rockers as well as to clamp the same laterally against the side frame; but these clamps 30 may fasten the legs or rounds of ordinary chairs.

The swiveled chair-clamp 23 may have the binding-screw mounted in either side thereof.

In lieu of using the series of openings in the telescopic rear brace I may make a longitudinal slot in the tubular brace member, which receives the solid or rod member, and the clamp 16 has its pointed end shaped to properly fit in the slot, which is considered to be the equivalent of the series of apertures.

I am aware that changes in the form and proportion of parts and in the details of construction may be made by a skilled mechanic without departing from the spirit or sacrificing the advantages of my invention, and I therefore reserve the right to make such modifications as clearly fall within the scope of the invention.

Having thus described the invention, what I claim is—

1. A portable chair-support comprising side frames having the legs pivoted together in pairs, diagonal braces pivoted to both side frames and having means for firmly clamping the braces together at their point of intersection, and two sets of clamps mounted on the side frames, substantially as described.

2. A portable chair-support consisting of foldable side frames, braces for holding said frames steadily in their unfolded positions, swiveled chair-clamps attached to said side frames, and adjustable chair-clamps fitted to the side frames for movement toward or from the swivel-clamps, substantially as described.

3. A portable chair-support comprising the foldable side frames, extensible braces attached to the side frames, and chair-clamps carried by the side frames, substantially as described.

4. A portable chair-support consisting of side frames adjustable laterally with respect to each other, extensible braces connecting the side frames, a clamp engaging with the extension members of said braces at the point of intersection thereof for holding the braces against slipping and preventing the side frames from spreading under the weight of the chair or its load, and chair-clamps attached to the side frames, substantially as described.

5. In a chair-support, the side frames each having a pair of legs pivoted together, and chair-clamps swiveled to the side frame at the point where the legs thereof are pivoted, and each clamp having a binding-screw, combined with means connecting the side frames to hold them against spreading under the load on the chair-support, and other clamps fitted on the legs of the side frames, substantially as described.

6. In a chair-support, the side frames having their legs pivoted together, the jaw-formed clamps connected to the side frames by the pivots which unite the legs thereof, and a binding-screw mounted in each jaw-formed clamp, combined with adjustable clamps fitted on the side frames below the jaw-formed clamps, substantially as described.

7. The combination with a chair-support, of swiveled clamps attached to said support, the vertically-adjustable clamps each slidably fitted on the chair-support below a swiveled clamp and provided with an offstanding bearing, 30, which lies adjacent to the chair-support to receive a chair leg or rocker between itself and said chair-support, and clamping-screws fitted in the vertically-adjustable clamps to hold the latter in their adjusted positions on the chair-support, substantially as described.

8. In a chair-support, an adjustable clamp for the leg or rocker of the chair provided with a horizontal loop, a bearing-plate above said loop, a bearing-loop in a vertical plane between the bearing-plate and horizontal loop, and a binding-screw carried by the lower bearing-loop, substantially as described.

9. In a portable chair-support, the combination of the side frames each having its legs pivoted together, extensible braces between the side frames, and swiveled clamps attached to the respective side frames by the bolts or pintles which unite the legs thereof, substantially as described.

10. In a portable chair-support, the combination of side frames each having its legs pivoted together and held in their spread position by hinged braces, the crossed extensible braces each connected pivotally to the side frames and provided with means for holding the members thereof in firm relation to each other, and chair-clamps attached to the side frames, substantially as described.

11. In a chair-support, the combination with side frames, and chair-clamps thereon, of the crossed extensible braces attached to the side frames, and a removable clamp to firmly bind the braces against collapsing, substantially as described.

12. In a chair-support, the combination with side frames, and chair-clamps thereon, of the crossed telescopic braces attached to the side frames and each brace having their tubular members formed with a series of apertures, and a removable clamp which spans the braces and provided with a binding-screw to fit the apertured tubular members of said braces, substantially as described.

In testimony that I claim the foregoing as my own I have hereto affixed my signature in the presence of two witnesses.

BAXTER C. SCOTT.

Witnesses:
A. J. MARTIN,
W. A. FAIR.