May 10, 1960 H. G. WEBSTER ET AL 2,936,270

METHODS FOR CLEANING AND DESCALING TITANIUM

Filed Nov. 12, 1957

2 Sheets-Sheet 1

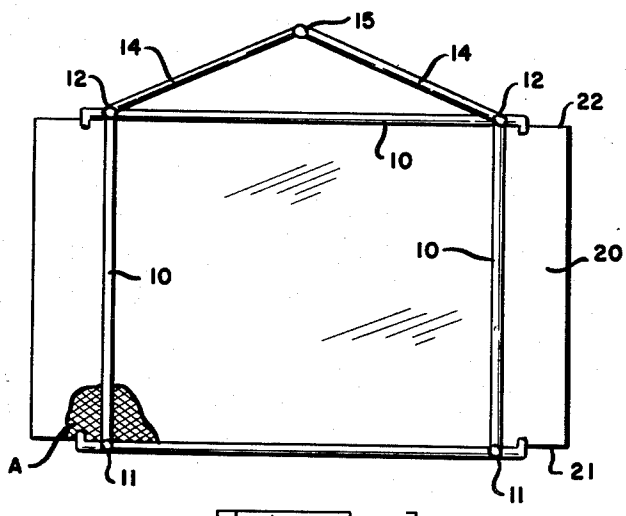

Fig. 1

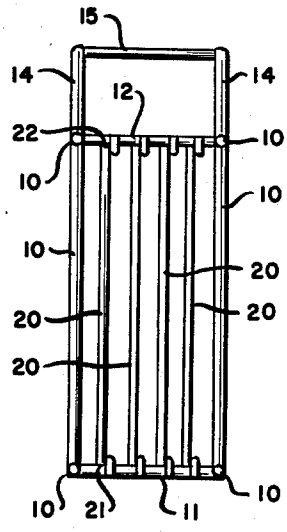

Fig. 2

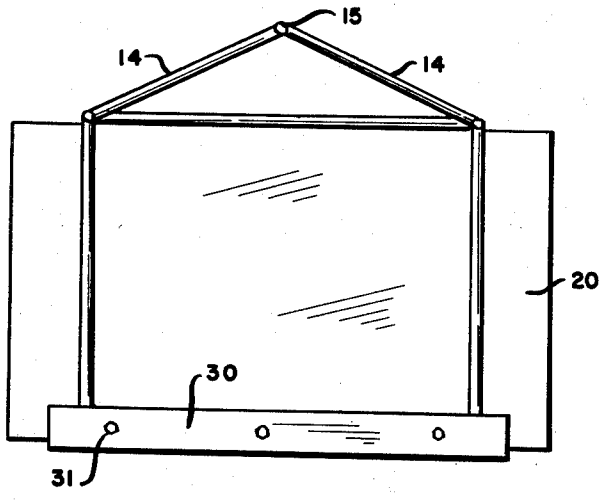

Fig. 3

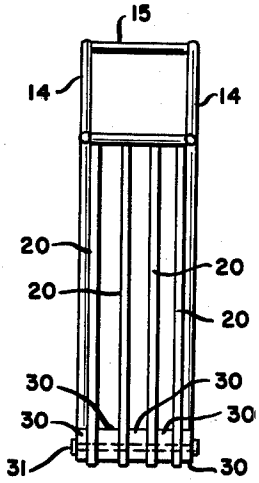

Fig. 4

INVENTORS

HUGH G. WEBSTER

BY ROBERT P. DEVANE

Daniel G. Cullen

ATTORNEY

May 10, 1960 H. G. WEBSTER ET AL 2,936,270

METHODS FOR CLEANING AND DESCALING TITANIUM

Filed Nov. 12, 1957 2 Sheets-Sheet 2

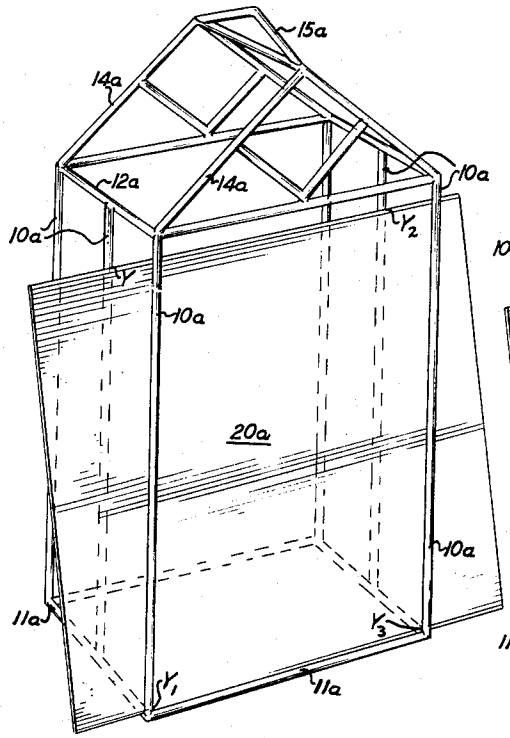

FIG. 5

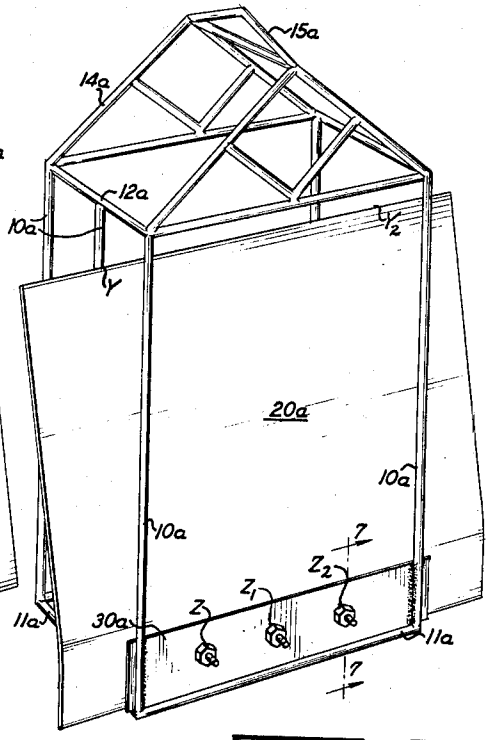

FIG. 6

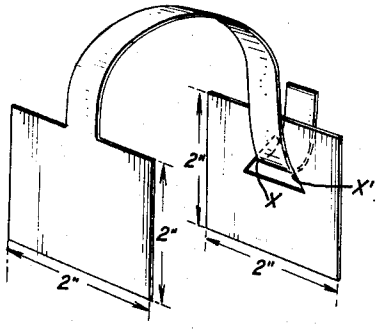

FIG. 8

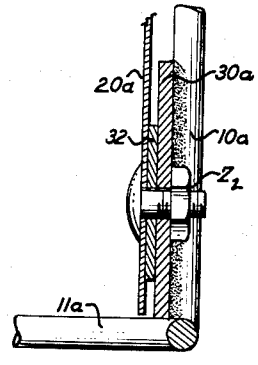

FIG. 7

INVENTORS

HUGH G. WEBSTER
and ROBERT P. DEVANE

BY Cullen & Cantor

ATTORNEYS

United States Patent Office 2,936,270 Patented May 10, 1960

2,936,270

METHODS FOR CLEANING AND DESCALING TITANIUM

Hugh G. Webster and Robert P. Devane, Detroit, Mich., assignors to Kolene Corporation, Detroit, Mich.

Application November 12, 1957, Serial No. 697,761

4 Claims. (Cl. 204—141)

This application is a continuation-in-part of our co-pending application Serial No. 480,860, filed January 10, 1955, now abandoned, and relates to a method and apparatus for cleaning and/or descaling of titanium and more particularly to the prevention of burning of titanium sheets supported in work-holders while immersed in molten alkali salt baths.

In the rolling and annealing of titanium from ingots to sheets and then to thinner sheets, it appears that a scale is formed on the hot sheet which is a type of oxide of titanium, the exact formula of which is uncertain. It is probably titanium dioxide and upon reaction in a caustic bath the titania (TiO_2) is probably dissolved as the titanate (Na_2TiO_3). It has been found that that scale is readily removed in a molten alkali salt bath of which there are two types, both comprising predominantly caustic soda, but essentially differing in that the first cleans metal merely by dipping in the bath and the second mounts the metal to be cleaned as an electrode in the bath and passes direct current therethrough.

The first type is described in U.S. Patent to Webster, 2,458,661. It is a type known in industry as Kolene No. 1 and, as described in this patent, includes an oxidizing agent such as a nitrate which, in combination with the caustic, oxidizes and loosens the scale to form a sodium titanate solution in the bath. As mentioned in that patent a typical bath composition comprises 1.5 to 3 parts by weight of alkali metal hydroxide; about 1 part by weight of alkali metal nitrate; and optionally about 0.1 to 0.5 part by weight of alkali metal chloride. A specific example comprises 2 parts by weight of sodium hydroxide, 1 part by weight of sodium nitrate and 0.5 part by weight of sodium chloride. This type of cleaning bath is unique in that the bath is heated to a temperature in the range of 550 to 1300° F. and the surface of the metal becomes clean merely by the immersion in the molten bath without electrolysis. For this type of bath, the cleaned metal may be given a subsequent acid bright dip. Generally, for cleaning of ferrous metals such bath was used at the lower end of the temperature range generally not exceeding 900° F.; but for cleaning of titanium metal such bath will usually be used in the upper range, preferably above 750° F., 900° to 1250° F. being a preferred range.

The second type of cleaning bath is described in U.S. Patent to Webster, 2,468,006. That type is known in industry as Kolene No. 4 and as described in this patent, the bath includes an electrolytically active oxidizing agent, specifically sodium aluminate, but no direct acting oxidizing agent of the nitrate type above described. That non-oxidizing type metal aluminate only during electrolysis serves as an oxygen carrier and oxidizes any free sodium formed at the cathode to sodium oxide, active to dissolve the metal oxide scale on the work piece to be cleaned. The aluminate is continuously regenerated with the dissolution of the oxidized titanium metal. Accordingly, it needs to be present only in a very small quantity. The type of cleaning in which such aluminate

is useful in combination with caustic is exclusively an electrolytic cleaning in contrast to the first type described above. For this purpose the work piece is suspended again in a work-holder and is immersed in the molten salt cleaning solution, the entire assembly being made a cathode (and sometimes anode alternately) and the cleaning is effected during the passage of electrolytic current. A typical composition mentioned in the patent comprises about 70 to 90% caustic alkali, such as sodium or potassium hydroxide, about 7 to 13% sodium chloride and about 0.5 to 5% sodium aluminate. The composition optionally includes alkali metal fluoride, and when used, will be present in proportion of about 2 to 6%, all proportions being by weight. A typical example of a cleaning bath of the second type may be 85% sodium hydroxide, about 10% sodium chloride, about 4% sodium fluoride and about 1% sodium aluminate; and if the fluoride is omitted, such typical composition will be 89% caustic soda, 10% sodium chloride and 1% sodium aluminate.

The bath of this second type is heated again from about 550 to 1300° F., preferably about 900 to 1250° F. and current at 4 to 6 volts is passed through the titanium metal in the work-holder first as a cathode at a current density of about 50 amperes per square foot for a period of 10 to 30 minutes and then the current is reversed, making the work piece and work-holder an anode, and passing current therethrough under the same conditions for a period of 3 to 10 minutes. The process of current reversal may be applied alternately several times, 2 or 3, as desired. This cleaned metal may also be given a bright dip in acid such as 10% hydrochloric acid after removal and washing of the molten salts therefrom.

Other forms of molten caustic baths have been applied to cleaning and descaling of titanium, such baths, however, giving rise to the same problem as solved by the present invention.

It is common practice in such operations to employ stainless steel racks or work-holders for holding the titanium sheets immersed in the bath, stainless steel because in these processes an acid dip or rinse is employed and stainless steel happens to be the best material developed thus far for work-holder purposes where the process includes acid dipping, inasmuch as the stainless steel is not attacked during that operation. However, it is found, using such stainless steel work-holder and mounting titanium usually as thin sheets in the work-holder, during immersion of the titanium in the caustic bath, whether of type 1 or type 2 or other caustic baths known in the art, operated with or without electrolysis, the titanium becomes burned at the point and immediately surrounding area of contact with the work-holder, and otherwise becomes degraded by hydrogen embrittlement in that area. The problem is outlined more specifically by reference to the drawings in which,

Fig. 1 shows a side view of a typical work-holder in the form of a rack used in the prior art to support titanium sheets with a sheet mounted therein.

Fig. 2 is an end view of that rack.

Fig. 3 shows a work-holder as in Fig. 1 with a strap bolted thereto and to a titanium sheet mounted therein.

Fig. 4 is an end view of Fig. 3.

Fig. 5 is a perspective diagram of a rack with a single sheet therein showing, exaggeratedly, the actual points of contact between the sheet and the rack.

Fig. 6 is a similar diagram like Fig. 5, including further a strap to be bolted between the rack and sheet.

Fig. 7 illustrates diagrammatically an enlarged detail of experimentally bolting a contact strap to a portion of a titanium sheet mounted within a rack as shown in Fig. 5.

Fig. 8 illustrates diagrammatically an experimental

assembly of two point contacts between unit surface areas of a plate of titanium and stainless steel.

Referring first to Fig. 8, two 2" square sheets, one of type 400 stainless steel, and the other pure titanium metal, the latter perforated for insertion of a 1" wide strap comprising an extension of the stainless steel plate whereby the strap contacts the titanium sheet at its two opposite edges as inserted through the perforation, are immersed as an assembly in a molten Kolene No. 1 bath. That bath, as stated above, consists, for example, of 2 parts caustic soda, 1 part sodium nitrate and ½ part sodium chloride. The temperature is raised gradually. It is found that at a temperature of 1235° F. the titanium metal will ignite at the point of contact with the stainless steel strap, i.e. at the points X and X_1 of Fig. 8. Oxidation of the titanium metal from these points will progressively continue at this temperature and will continue so long as the titanium remains in the bath. That temperature is critical in that it is an ignition point. At lower temperatures, in the immediate area of the point contact, it is apparent that some reaction, apparently a "burning," takes place because the metal appears to be eroded and embrittled, the latter a property of titanium known to result from the adsorption of large quantities of hydrogen. At the lower temperatures, below the critical point of 1235° F., ignition does not actually take place.

Again, the experiment was repeated applying current to the assembly of Fig. 8 while immersed in a Kolene 4 type of bath by leading electrical current in contact with the steel plate as a cathode at a current density of 50 amperes per square foot. The bath consisted of 89 parts of caustic soda, 10 parts of sodium chloride and 1 part of sodium aluminate. The results were the same indicating that the burning of the titanium is a function of the bath, the temperature thereof and the dissimilar metals in point contact and is not a function of the presence or absence of electrolysis applied in the cleaning of the metal.

Thus, the burning appears to be a burning of titanium sheets in spots emanating from the points where the titanium sheets are in contact with the stainless steel work-holder, such as a rack. It is obvious that unless the stainless steel rack with the titanium sheet therein is pulled out of the bath very quickly, burning of the titanium metal would continue with progressive damage.

For instance, referring to Fig. 5, a metal rack is constructed of ¼" round stock 316 stainless steel. It is formed of vertical legs **10***a*, bottom bars **11**, top bars **12**, and hanger stirrup bars **15**, fastened together as by welding into a rack as shown and further described below in relation to Fig. 1 below, which is similar. A sheet **20***a* of titanium 30" x 36" x .032" is supported in point contact with the rods of the rack. The titanium metal sheet contacted the rack at 4 points, Y, Y_1, Y_2 and Y_3 as shown. The metal and rack as shown in Fig. 5 was immersed in the first type of bath (2 parts caustic soda, 1 part sodium nitrate, 0.5 part sodium chloride) at a temperature of 980° F. and the titanium ignited at all 4 points of contact, Y, Y_1, Y_2 and Y_3; when the metal sheet was immersed in the same bath at 850° F. no ignition occurred. It was found that this burning is due to a galvanic action which occurs between the titanium sheet metal work-piece and the stainless steel rack in which it is supported in the bath. It is further found that the galvanic effect varies in intensity with the temperature of the bath.

Moreover, although it was first believed that the current values of that galvanic action between the metal work-piece and the rack would be in the neighborhood of 100 milliamperes per square inch as could be calculated from known electrode potentials of these metals, we found, surprisingly, that the current flow initially is about ten times as great, i.e. 1000 milliamperes per square inch, at the beginning of the cleaning operation and instantaneous conditons may be even higher. Such high current values comprise an extremely high density of current at the points of contact thereby progressively burning the metal or igniting it at certain critcial points, depending upon the actual temperature of the bath.

The momentary current flow per square inch was measured between plates of titanium and 300 series stainless steel each 2" square, both 0.032" thick, the plates being arranged as shown in Fig. 8 and immersed in a type I bath. At 700° F. the current flow per square inch thus measured was 0.14 ampere (140 milliamperes); at 820° F. the current flow more than doubled and was 0.30 ampere (300 milliamperes); and at 975° F. the current flow was 1 ampere (1000 milliamperes). It is apparent that in the unit plate burning experiment described above, the ignition current at 1235° F. well exceeded 1000 milliamperes per square inch.

Accordingly, we have concluded that it is not possible to conduct such large current values through these very small points of contact between the rack and sheet safely and without burning. We have concluded that the extremely large current values at the beginning of the cleaning operation coupled with the small area of contact between the sheet and the holder causing high current densities at high bath temperatures, is the primary cause of the burning of the sheet at the start of the operation.

We have also found that after the cleaning operation is well under way, polarization sets in and within a few minutes the galvanic current drops from the neighborhood of 300 to well over a 1000 milliamperes per square inch, depending upon the temperature, down to about 100 milliamperes per square inch, which is insufficient to cause burning.

According to the present invention we have discovered that the minimum contact area at an average intermediate temperature of 980° F. should be one unit area of contact between a work-holder and titanium metal supported therein per 500 units of surface area of the titanium metal supported. At a higher temperature, such as temperatures above 1100° F., the amount of contact area should be doubled, i.e. 1 unit of surface area in 250 units of titanium surface supported, and at a lower temperature, such as a temperature as low as 850° F. the minimum average area contacted may be reduced to ½. Thus, the critical ratio of both exposed surface area of titanium metal supported in a work-holder to the actual contact area with the work-holder should be 500 units of titanium surface to from ½ to 2 units of area of contact with the work-holder.

These conditions vary with respect to temperature, requiring about ½ unit contact area per 500 units of titanium surface at a temperature of about 850° F., about one unit per 500 at a temperature of about 980° F., and about 2 units of contact area per 500 units, supported at temperatures exceeding about 1100° F. The provision of such critical large area high quality contact between the rack and the sheet, we have discovered, resulted in the absence of burning during the cleaning operation, even at the start of such operation.

Figs. 1 and 2 illustrate the old style racks commonly used as work-holders for cleaning of metals of various types, and which allow burning of titanium as herein described. Each such rack comprises wire or rods joined, as by welding, to form side bars **10**, bottom bars **11**, top bars **12**, connecting bars **14**, and hanger stirrup bars **15**. The sheets **20** of titanium are supported with their lower and upper edges **21** and **22** in contact with the bottom bars **11** and top bars **12**, corresponding to the pin-point contacts Y, Y_1, Y_2 and Y_3, exaggeratedly and diagrammatically illustrated in Fig. 5. At A of Fig. 1 is shown an area of burning at a point of contact between the sheet **20** and the bottom bar **11**, that area of burning comprising an eroded discolored area which is substantially embrittled by adsorption of hydrogen and comprises a greatly damaged area of the sheet, both from the standpoint of the appearance of the sheet which the bath was intended to improve in its initial cleaning, as well as damage in the physical characteristics of the metal at this point due to the burning and embrittlement.

Example

To illustrate the practice of this invention, the sheet **20***a*, as shown diagrammatically in Figs. 6 and 7, has a strap **30***a* comprising 3" x 24" type 316 stainless steel sheet welded to the rack, that is, to bars **10***a* near the bottoms thereof. The sheet **20***a* was then bolted at Z, each bolt gripping the sheet through a round stainless steel washer **32** yielding a contact area therebetween of about 1½ square inches, the sheet **20***a* itself being 30" x 36" x 0.032" and having total surface area of 2160 square inches. As described above for Fig. 6 the sheet **20***a* and rack were immersed in the Kolene No. 1 bath having the same composition, 2 parts caustic soda, 1 part sodium nitrate and 0.5 part sodium chloride, heated to 980° F. and ignition occurred immediately despite the 1½ square inch contact area through the washer **32**, indicating an area ratio of about 1500 to 1 to be too small at this temperature. A second bolt Z_1 was applied thereby increasing the contact area Z and Z_1 to 3". No ignition took place with that double area, thereby indicating at this temperature that the critical surface area of titanium sheet at the work-holder per unit contact area is about 750 to 1, somewhat larger than necessary. With that enlarged area of contact between the strap **30***a* and the sheet of titanium metal, not only was there no burning in the area of the strap but there was likewise no burning at the upper contact points of the titanium plate such as Y and Y_2. The experiment of this example was repeated in a Kolene No. 4 bath consisting, as stated above, of 89 parts of caustic soda, 10 parts of sodium chloride and 1 part of sodium aluminate, and current connected to the rack through the stirrup rods to provide a current density of 50 amperes per square inch and at a temperature of 980° F., gave the same burning when no strap was used according to the diagram of Fig. 6, and the same burning with one 1½ square inch surface area washer **32** according to Fig. 7, but all burning was overcome when at least two washers in 3 square inch area of contact was used to fasten the strap **30***a* to the titanium sheet.

It was found that the mounting of titanium sheet with a continuing strap **30** as shown in Fig. 3, the rack allowing several sheets to be mounted in a single rack, each separated by strap **30** as may be further noted from the end view Fig. 4, all burning of the sheet was terminated at temperatures slowly raised up to and exceeding 1250° F. where the area of contact exceeded 1 unit in 250.

It was found that where the construction of Fig. 3 allowed contact of one unit in 500 (surface area of titanium) a temperature up to 980° F. produced no ignition or burning; and when the area ratio was one unit in 1000 no burning or ignition of the titanium sheet occurred up to 850° F.

In such large size testing three 30" x 36" sheets of titanium were inserted in a stainless steel wire rack in such a way that each sheet contacted the rack at four points only, two at the bottom of each sheet and two at the top of each sheet. The rack was immersed in a Kolene No. 1 bath at 900° F. and ignition was observed after 75 seconds. It was observed that such ignition had taken place at one of the upper contact points on the center sheet of titanium. This sort of experiment was repeated several times with generally the same result.

On the other hand, a similar set of sheets and rack were associated except that in this latter embodiment high area, high quality contact between the titanium sheets and rack was established by means of 24" x 3" strips of stainless steel and 8 clamping bolts with 3 such stainless strips being welded to the rack and the eight bolts used to effect excellent electrical contact between the rack through these strips and the sheets. The assembly was then immersed in a Kolene No. 1 bath at 980° F. and there was no evidence of ignition despite 150 seconds and more of immersion. This test was repeated several times with generally the same results.

It has also been concluded that inasmuch as the current values lower themselves due to polarization shortly after the start of the cleaning operation that it is not necessary to maintain the high quality large area electrical contact shortly after the start of the operation, but that instead, much of the area of contact can be removed and satisfactory results may be obtained, once the operation is well underway and polarization has taken place, with the conventional type of contact, namely poor contact over small area and at isolated points. Recognizing this, we contemplate to provide a releasable device for removing most of the area of contact after polarization has set in, in order to expose the maximum area of the sheet being cleaned for cleaning purposes. Obviously, if a large area of the sheet is taken up by contact then such area is not exposed for cleaning. Therefore, we propose to provide a releasable means which may be operated to insure large area of contact between the rack and the sheet at the start of the operation but which may be released after polarization sets in so as to reduce the contact area and to expose more of the sheet for cleaning.

It is expected that in the electrolysis of sodium hydroxide some hydrogen will be released. Where the two dissimilar metals are a point contact and galvanic current develops in high current density through the point contact, copious quantities of hydrogen are evolved at that point which, it is believed, results in the embrittlement of titanium metal. However, it is found that using the critical large surface area of contact as hereinabove described, such electrolysis of the caustic soda as may take place by galvanic action, is so widely distributed over the entire surfaces of the metals that no localized concentration of hydrogen contacts the titanium and no significant hydrogen embrittlement is found.

Thus, we have discovered that titanium metal supported in a cleaning rack and immersed in a molten salt cleaning bath predominantly caustic soda in the range of 500–1300 F., burns at the point of contact of the metal with the rack due to the high density of galvanic current that must be carried through such contact points as developed between dissimilar metals. While we have disclosed stainless steel as a preferred metal for forming the rack in view of its resistance to corrosion in subsequent acid dip, other dissimilar metals such as steel, nickel or copper, useful for forming the rack which may be used herein, will give rise to the same problem, and such burning will be overcome by the present method and apparatus.

Various modifications will occur to those skilled in the art and accordingly it is intended that the description herein be regarded as illustrative and not limiting except as defined in the claims appended hereto.

We claim:

1. The method of cleaning the surface of titanium metal comprising mounting the titanium metal in a work-holder in firm electro-conductive contact between the work-holder and the titanium metal body over a surface area ranging upward from a minimum of ½ to 2 units of area of contact between the work-holder and titanium metal surface for each 500 units of exposed titanium surface area, said work-holder being formed of electro-conductive metal having an electrochemical activity less than that of the titanium, and immersing the combined work-holder and titanium metal mounted therein in a bath comprising predominantly molten caustic alkali maintained at a temperature in the range of 500 to 1300° F., for a period at least sufficient for initial reaction with the bath components.

2. The method of cleaning titanium metal sheet comprising mounting said titanium metal sheet in a work-holder in firm electro-conductive contact between the work-holder and titanium sheet surface over a surface area ranging upward from a minimum of ½ to 2 units of area of contact between the work-holder and titanium metal surface for each 500 units of exposed titanium sur-

face area, said work-holder being formed of electroconductive metal having an electrochemical activity less than that of the titanium, and immersing the combined work-holder and titanium metal sheet mounted therein in a bath comprising predominantly molten caustic alkali maintained at a temperature in the range of about 850 to 1250° F. for a period at least sufficient for initial reaction with the bath components.

3. Method as defined in claim 2 wherein the bath comprises about ½ to 3 parts by weight of alkali metal hydroxide, about 1 part by weight of alkali metal nitrate and up to about 0.5 part by weight of alkali metal chloride.

4. The method as defined in claim 2 wherein the bath comprises about 70–90% of alkali metal hydroxide, about 7–13% of sodium chloride, about 0.5–5% of sodium aluminate and about 0–6% of alkali metal fluoride, and the metal is cleaned by electrolysis while suspended in said work-holder as an electrode in said bath comprising passing direct current through said bath, work-holder and titanium metal suspended therein as an electrode.

References Cited in the file of this patent

UNITED STATES PATENTS

1,501,692	Ward	July 15, 1924
2,048,854	Dyer	July 28, 1936
2,675,348	Greenspan	Apr. 13, 1954
2,852,463	Gutzmer	Sept. 16, 1958

OTHER REFERENCES

Belke Plating Rack Manual, copyrighted 1947 by Belke Manufacturing Company, Chicago, Ill., page 20.

Handbook on Titanium Metal, 7th ed. (1953), publ. by Titanium Metals Corp. of America, N.Y., pp. 45–46.