(12) INTERNATIONAL APPLICATION PUBLISHED UNDER THE PATENT COOPERATION TREATY (PCT)

(19) World Intellectual Property Organization
International Bureau

(43) International Publication Date
19 December 2024 (19.12.2024)

WIPO | PCT

(10) International Publication Number
WO 2024/259036 A2

(51) International Patent Classification:
Not classified

(21) International Application Number:
PCT/US2024/033714

(22) International Filing Date:
13 June 2024 (13.06.2024)

(25) Filing Language: English

(26) Publication Language: English

(30) Priority Data:
63/508,471 15 June 2023 (15.06.2023) US

(71) Applicant: **DRAGONFLY ENERGY CORP.** [US/US]; 1190 Trademark Drive, Suite 108, Reno, NV 89521 (US).

(72) Inventor: **HOPKINS, Ryan**; 1095 S University Park Loop, Reno, NV 89512 (US).

(74) Agent: **HARMON, John, S.** et al.; Wolf, Greenfield & Sacks, P.C., 600 Atlantic Avenue, Boston, MA 02210-2206 (US).

(81) Designated States *(unless otherwise indicated, for every kind of national protection available)*: AE, AG, AL, AM, AO, AT, AU, AZ, BA, BB, BG, BH, BN, BR, BW, BY, BZ, CA, CH, CL, CN, CO, CR, CU, CV, CZ, DE, DJ, DK, DM, DO, DZ, EC, EE, EG, ES, FI, GB, GD, GE, GH, GM, GT, HN, HR, HU, ID, IL, IN, IQ, IR, IS, IT, JM, JO, JP, KE, KG, KH, KN, KP, KR, KW, KZ, LA, LC, LK, LR, LS, LU, LY, MA, MD, MG, MK, MN, MU, MW, MX, MY, MZ, NA, NG, NI, NO, NZ, OM, PA, PE, PG, PH, PL, PT, QA, RO, RS, RU, RW, SA, SC, SD, SE, SG, SK, SL, ST, SV, SY, TH, TJ, TM, TN, TR, TT, TZ, UA, UG, US, UZ, VC, VN, WS, ZA, ZM, ZW.

(84) Designated States *(unless otherwise indicated, for every kind of regional protection available)*: ARIPO (BW, CV, GH, GM, KE, LR, LS, MW, MZ, NA, RW, SC, SD, SL, ST, SZ, TZ, UG, ZM, ZW), Eurasian (AM, AZ, BY, KG, KZ, RU, TJ, TM), European (AL, AT, BE, BG, CH, CY, CZ, DE, DK, EE, ES, FI, FR, GB, GR, HR, HU, IE, IS, IT, LT, LU, LV, MC, ME, MK, MT, NL, NO, PL, PT, RO, RS, SE, SI, SK, SM, TR), OAPI (BF, BJ, CF, CG, CI, CM, GA, GN, GQ, GW, KM, ML, MR, NE, SN, TD, TG).

Published:
— *without international search report and to be republished upon receipt of that report (Rule 48.2(g))*

(54) **Title:** THERMAL EXPANSION COMPENSATION FOR ELECTROCHEMICAL DEVICE MANUFACTURING

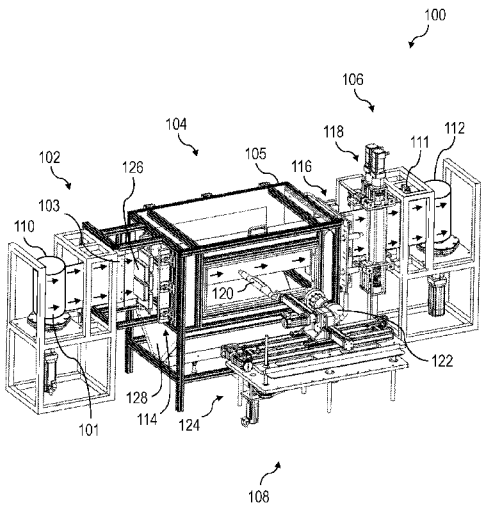

FIG. 1

(57) **Abstract:** Systems and methods for spray depositing a material layer using an ionically conductive powder are disclosed. The spray deposited material layer can be used to form an electrochemical cell. Systems and methods for manufacturing electrochemical cells are also disclosed. Systems and methods for heating a gas are also disclosed. Systems and methods involving spray deposition of a material layer and directing a plasma towards a substrate are also disclosed.

WO 2024/259036 A2

THERMAL EXPANSION COMPENSATION FOR ELECTROCHEMICAL DEVICE MANUFACTURING

CROSS REFERENCE TO RELATED APPLICATIONS

[0001] This application claims the benefit of priority under U.S.C. § 119(e) of U.S. Provisional Application Serial No. 63/508,471, filed June 15, 2023, the disclosure of which is incorporated herein by reference in its entirety.

FIELD

[0002] Disclosed embodiments are related to systems and method for forming an ionically conductive layer.

BACKGROUND

[0003] Lithium ion batteries typically include two or more electrodes separated by an electrically insulating material that is permeable to the diffusion of lithium ions between the electrodes. In some instances, one electrode (i.e., the anode) includes an anode powder material coated onto a copper substrate and the other (i.e., the cathode) includes a cathode powder material coated onto an aluminum substrate, though other electrode materials and chemistries are also used in various applications. The production of these electrodes is conventionally done using slurry casting methods, in which the electroactive material (e.g. the anode or cathode material) powders are mixed with a polymer binder (e.g. typically polyvinylidene fluoride PVDF) which is dissolved in an appropriate solvent (e.g. typically N-methyl pyrrolidone). The resulting slurry is cast onto the electrode substrate. Subsequently, the solvent is evaporated and reclaimed to form a dried layer of electrochemical material on the electrode surface. Slurry casting has also been used to form solid-state electrolyte using electrolyte slurries. The electrolyte slurries often include a lithium salt solvated in a polymer binder, prepared through dissolution in what is often termed a 'non-solvent' (e.g. typically N-methyl pyrrolidone). Subsequently, the non-solvent is evaporated to form a dried layer of electrolyte material between the electrodes. In order to remove all the solvent from the electrodes and/or electrolyte after slurry casting, enormous amounts of time and energy are expended in the use of large conveyor ovens and vacuum dryers that help to dry the deposited slurry.

SUMMARY

[0004] In some embodiments, a method for spray depositing an ionically conductive layer comprises heating a flow of gas to a first temperature greater than an ambient temperature and aerosolizing an ionically conductive powder with the flow of gas, wherein the powder includes a thermoplastic binder. The method further comprises heating a substrate to a second temperature greater than the first temperature and spraying the aerosolized ionically conductive powder onto the heated substrate to form the ionically conductive layer on the substrate.

[0005] In some embodiments, a spray deposition system comprises an ionically conductive powder source, a gas source, and a first gas heater fluidly coupled to the gas source, wherein the first gas heater is configured to heat a flow of gas from the gas source to a first temperature greater than an ambient temperature. The spray deposition system further comprises a heater configured to heat a substrate to a second temperature greater than the first temperature and a sprayer coupled to the first gas heater and the ionically conductive powder source, wherein the sprayer is configured to aerosolize and spray ionically conductive powder from the ionically conductive powder source using the heated flow of gas towards the heated substrate to form an ionically conductive layer on the substrate.

[0006] In some embodiments, a gas heater comprises an inlet configured to be fluidly coupled to a gas source, a first manifold fluidly coupled to the inlet, and a plurality of tubes fluidly coupled to the first manifold at an upstream portion of the plurality of tubes. The gas heater further comprises a heater thermally coupled to the plurality of tubes, wherein the plurality of tubes are thermally conductive and the heater is configured to heat a flow of gas flowing through the plurality of tubes, a second manifold fluidly coupled to the plurality of tubes at a downstream portion of the plurality of tubes, and an outlet fluidly coupled to the second manifold.

[0007] In some embodiments, a method for depositing material onto a substrate comprises directing a flow of gas through an inlet of a first manifold and directing the flow of gas through a plurality of tubes which are thermally conductive. The method further comprises heating the plurality of tubes, transferring heat from the plurality of tubes to the flow of gas within the plurality of tubes to heat the flow of gas, and directing the flow of gas to an outlet of a second manifold.

[0008] In some embodiments, a spray deposition system comprises an ionically conductive powder source and a sprayer configured to aerosolize and spray ionically conductive powder from the ionically conductive powder source towards a substrate to form an ionically conductive layer on the substrate. The spray deposition system further comprises a pair of

calendaring rollers configured to calendar the ionically conductive layer disposed on the substrate, and wherein the pair of calendaring rollers are configured to apply a substantially constant calendaring force to the ionically conductively layer.

[0009] In some embodiments, a method for manufacturing an electrode of an electrochemical cell comprises directing a substrate coated with an ionically conductive layer between a pair of calendaring rollers and applying a calendaring force to the ionically conductive layer and the substrate using the pair of calendaring rollers. The method further comprises controlling movement of at least one calendaring roller of the pair of calendaring rollers to maintain a substantially constant calendaring force applied to the ionically conductive layer and the substrate.

[0010] In some embodiments, a spray deposition system comprises an ionically conductive powder source and a sprayer configured to aerosolize and spray ionically conductive powder from the ionically conductive powder source towards a substrate to form an ionically conductive layer on the substrate. The spray deposition system further comprises a heater configured to heat the substrate and a feed system configured to feed the substrate past the sprayer, wherein the feed system is configured to maintain a tensile force in the substrate to compensate for thermal expansion of the substrate during spray deposition of the ionically conductive layer.

[0011] In some embodiments, a method for depositing an ionically conductive material onto a substrate comprises aerosolizing an ionically conductive powder and spraying the aerosolized ionically conductive powder towards a substrate to form an ionically conductive layer on the substrate. The method further comprises heating the substrate and maintaining a tensile force in the substrate to compensate for thermal expansion of the substrate during deposition of the ionically conductive layer.

[0012] In some embodiments, a spray deposition system comprises an ionically conductive powder source and a sprayer configured to aerosolize and spray ionically conductive powder from the ionically conductive powder source towards a substrate to form an ionically conductive layer on the substrate. The spray deposition system further comprises a heater configured to heat the substrate, a feed system configured to feed the substrate past the sprayer, and at least one plasma generator configured to generate and direct a plasma towards the substrate as the substrate is fed towards the sprayer by the feed system.

[0013] In some embodiments, a method for depositing an ionically conductive material onto a substrate comprises directing a plasma towards a substrate and aerosolizing an ionically conductive powder. The method further comprises heating the substrate and spraying the

aerosolized ionically conductive powder onto the heated substrate after the plasma is applied to the substrate to form an ionically conductive layer on the substrate.

[0014] In some embodiments, a spray deposition system comprises an ionically conductive powder source, a spray chamber including an internal volume, and a sprayer configured to aerosolize and spray ionically conductive powder from the ionically conductive powder source towards a substrate within the internal volume to form an ionically conductive layer on the substrate, wherein the sprayer is disposed at least partially within the internal volume. The spray deposition system further comprises an inlet to the internal volume, an outlet from the internal volume, and a feed system configured to feed the substrate through the inlet of the internal volume, past the sprayer, and through the outlet of the internal volume. The spray deposition system further comprises a gas system configured to maintain a pressure of an atmosphere of the internal volume at a pressure less than a pressure of one or more surrounding volumes.

[0015] In some embodiments, a method for depositing an ionically conductive material onto a substrate comprises providing a substrate within an internal volume of a spray chamber and aerosolizing an ionically conductive powder source. The method further comprises spraying the aerosolized ionically conductive powder towards the substrate and maintaining a pressure of an atmosphere of the internal volume at a pressure less than a pressure of one or more surrounding volumes.

[0016] It should be appreciated that the foregoing concepts, and additional concepts discussed below, may be arranged in any suitable combination, as the present disclosure is not limited in this respect. Further, other advantages and novel features of the present disclosure will become apparent from the following detailed description of various non-limiting embodiments when considered in conjunction with the accompanying figures.

BRIEF DESCRIPTION OF DRAWINGS

[0017] The accompanying drawings are not intended to be drawn to scale. In the drawings, each identical or nearly identical component that is illustrated in various figures may be represented by a like numeral. For purposes of clarity, not every component may be labeled in every drawing. In the drawings:

[0018] Fig. 1 shows an isometric view of a spray deposition system according to some embodiments;

[0019] Fig. 2 shows another isometric view of a spray deposition system according to some embodiments;

[0020] Fig. 3 shows yet another isometric view of a spray deposition system according to some embodiments;

[0021] Fig. 4A shows a top view of a spray deposition system according to some embodiments;

[0022] Fig. 4B shows another top view of a portion of a spray deposition system according to some embodiments;

[0023] Fig. 4C shows yet another top view of a portion of a spray deposition system according to some embodiments;

[0024] Fig. 5 shows a side view of a spray deposition system according to some embodiments;

[0025] Figs. 6A and 6B show an embodiment of a flow diagram of a method of spray depositing powder onto a substrate;

[0026] Figs. 7A and 7B show another embodiment of a flow diagram of a method of spray depositing powder onto a substrate;

[0027] Fig. 8 shows a perspective view of a sprayer according to some embodiments;

[0028] Fig. 9 shows a perspective view of a gas preheater according to some embodiments;

[0029] Fig. 10 shows a cross-sectional view of a gas preheater according to some embodiments;

[0030] Fig. 11 shows another cross-sectional view of a gas preheater according to some embodiments;

[0031] Fig. 12 shows yet another cross-sectional view of a gas preheater according to some embodiments;

[0032] Fig. 13 shows a schematic view of a spray deposition system according to some embodiments;

[0033] Fig. 14 shows a schematic plan view of a spray deposition system according to some embodiments;

[0034] Fig. 15 shows an isometric view of a pair of calendaring rollers according to some embodiments;

[0035] Fig. 16 shows a schematic representation of an ionically conductive particle according to some embodiments;

[0036] Fig. 17 shows a schematic representation of one embodiment of an at least partially encapsulated particle; and

[0037] Fig. 18 shows a schematic embodiment of a control system for implementing the systems and methods disclosed herein.

DETAILED DESCRIPTION

[0038] Spray deposition of ionically conductive materials can be used to manufacture electrochemical cells, including lithium (Li) ion batteries, solid state electrochemical cells, and other types of electrochemical cells. Manufacturing the electrochemical cells may include forming an ionically conductive layer, which may be formed by spraying ionically conductive powder onto a substrate such as a metal foil. Existing approaches to spray deposition may exhibit large temperature differentials between the material being sprayed, the substrate, and the melting temperature of a binder included in the materials being sprayed. This may result in difficulty in appropriately melting and binding a spray deposited ionically conductive layer of particles onto the substrate. Issues associated with the difficulties in melting and binding the layer include reduced adherence of the particles to the substrate, reduced uniformity in the layer, difficulty depositing thick layers, and/or other potential issues. These issues can result in material layers unsuitable for use in electrochemical cells, thereby wasting materials, time, and associated costs.

[0039] In view of the above, the inventors have recognized the need for improved methods and systems for spray depositing material layers during the manufacturing of electrochemical cells, and especially for use in forming ionically conductive layers within an electrochemical cell. The inventors have recognized systems and methods for spray depositing ionically conductive powder on a substrate wherein the temperature differentials between the sprayed ionically conductive powder, the substrate, and/or the surrounding atmosphere under which the spray deposition process is performed relative to a melting temperature of a binder of the sprayed powder may be reduced. Generally, preheating the particles to a temperature above an ambient temperature prior to being sprayed onto a substrate may reduce the observed thermal gradients and/or energy needed to properly melt a thermoplastic binder of the particles to adhere to the substrate and/or other surrounding particles. Preheating the particles to a temperature below a melting temperature of the particles may help to prevent agglomeration of the particles within a sprayer. The sprayed particles may then be heated above the melting point either due to a temperature of the atmosphere and/or the substrate being above the melting temperature of the thermoplastic binder. The above spraying method may result in improved adhesion between the ionically conductive powder and the substrate, among other benefits.

[0040] As noted above, to prevent agglomeration of the sprayed particles within a sprayer, in some embodiments, it may be preferable to keep the material being sprayed at a temperature that is below a melting temperature of a binder of the particles within the sprayer. In contrast, if the material is heated to a temperature greater than the melting temperature of the binder, the particles may agglomerate which may pose risks of clogging the sprayer or otherwise improperly bonding to the substrate. Still, heating the material prior to spray deposition to a temperature that is above the ambient temperature and less than a melting temperature of the binder may still be desirable to improve bonding of the material to the substrate and reduce overall energy consumption as described herein.

[0041] In some embodiments, the particles of ionically conductive powder, and/or a flow of gas the particles are entrained within, may be preheated to a temperature less than or equal to approximately 70°C, 60°C, 50°C, and/or any other appropriate temperature. The particles of ionically conductive powder and/or the flow of gas may also be preheated to a temperature greater than or equal to 40°C, 50°C, 60°C, and/or any other temperature. Combinations of the foregoing, including temperatures between or equal to 40°C and 70°C are also contemplated, as well as temperatures greater than and less than the ranges listed above depending on the specific binder materials being used, as the present disclosure is not limited by the preheated temperature of the particles of ionically conductive powder and/or the associated gas flow.

[0042] As noted above, it may be desirable to preheat particles of an ionically conductive powder prior to spray depositing the material onto a substrate. In one such embodiment, the particles may be preheated using a heated flow of gas used to move the particles through a sprayer and towards a substrate. This flow of gas may be heated using any appropriate type of heater. In some embodiments, a gas preheater may be arranged to heat the flow of gas by directing the flow of gas through a first manifold to a plurality of heated tubes coupled to the first manifold. In some embodiments, the plurality of heated tubes may be fluidly coupled to a second manifold which may be disposed downstream of the first manifold. The heated tubes may optionally be oriented radially about a central support. In some embodiments, the gas preheater may heat the flow of gas directed through the heated tubes using a resistive heater. For example, a resistive heater may be configured such that current flows through the resistive heater and heat is conducted from the resistive heater to the plurality of tubes. However, other types of heaters capable of preheating the flow of gas may also be used as the disclosure is not limited to a specific type of heater. In some embodiments, the above noted gas preheater may also be used to heat the internal volume of a spray chamber as elaborated on further below.

[0043] In embodiments where powder material is being sprayed, it may be desirable to isolate certain components from exposure to the powder as powder material may damage moving components of a spray deposition system, thereby hindering the performance of the component and/or increasing the likelihood of further degradation to the system. This may be especially problematic when the powder material is sprayed at relatively high velocities and accordingly may impact components with relatively high kinetic energy and/or disperse over a large area. For at least these reasons, containing sprayed powder material within an internal volume of a spray chamber in which a spraying process is performed may help to reduce or prevent damage to the system and the associated burden and cost related to the cleaning and/or maintenance of the damaged components. For example, an internal volume in which one or more sprayers are disposed may be at least partially isolated from a surrounding environment and/or other portions of a spray deposition system in order to prevent powder material from leaving the internal volume within which a spraying process is performed.

[0044] Isolating the internal volume of a spray chamber of a spray deposition system may also provide the benefit of isolating an atmosphere of the internal volume, thereby maintaining one or more desired properties of the atmosphere. For example, the atmosphere may have a different humidity level, pressure, temperature, and/or any other appropriate property that may differ from those of surrounding volumes and/or an ambient atmosphere surrounding the spray deposition system. For example, the internal volume may include dry air held at a desired operating temperature according to some preferred embodiments. However, in embodiments in which a substrate is moved through the spray chamber during spraying process, additional seals and/or components may be used to permit the substrate to be fed through the chamber, with a deposited layer of powder formed on the portion of the substrate exiting the spray chamber, while maintaining the desired internal atmosphere. Thus, the internal volume may include one or more seals configured to permit the substrate to pass through, and the one or more seals may be configured to seal the internal volume such that sprayed material is at least partially prevented from exiting the internal volume of the spray chamber and entering the one or more surrounding volumes and/or the ambient atmosphere. Thus, the seals may help to prevent powder from leaving the internal volume of the spray chamber while also isolating the internal volume from the one or more surrounding volumes and the ambient atmosphere to help to maintain the properties of the internal volume. In some embodiments, one or more air curtains may be used in conjunction with or separately from the one or more seals to help maintain the properties of the atmosphere of the internal volume and to help to prevent sprayed material from leaving the internal volume, as discussed further below.

[0045] As noted above, the atmosphere within a volume in which a powder is sprayed (e.g., the internal volume) onto a substrate may optionally be preheated. In such an embodiment, the atmosphere may be preheated using any appropriate type of heater as the disclosure is not so limited. As described further herein, the atmosphere may be preheated using a flow of gas that is heated by a gas preheater according to some embodiments. In some embodiments, the atmosphere may be heated using conductive heaters, convective heaters, resistive heaters, radiators, any other appropriate type of heater, or combination of heaters. Preheating the atmosphere may to help prevent heat loss from the particles traveling from the sprayer onto the substrate, thereby help to improve adhesion of the particles to the substrate. The atmosphere may be heated to a temperature greater than or equal to a temperature of the particles sprayed into the internal volume of a spray chamber and less than a decomposition temperature of the one or more components of the particles being sprayed. In some embodiments, this may include holding a temperature of the atmosphere of the spray chamber above a melting and/or curing temperature of a binder of particles sprayed onto a substrate. It should be understood that the temperature to which the internal volume is heated may vary depending on the material of the substrate and/or the material of the powder being spray deposited thereon.

[0046] In some embodiments, the above noted temperature of the atmosphere within an internal volume of a spray chamber may be elevated relative to an ambient temperature. This may include temperatures greater than a melting or curing temperature of a binder of the sprayed materials and less than a decomposition temperature of the binder. In some embodiments, the temperature of the atmosphere may also be greater than a temperature of an aerosolized flow of particles and gas emitted by a sprayer (e.g., between about 5°C and 10°C greater). This may include temperatures of the atmosphere that are less than or equal to approximately 300°C, 250°C, 200°C, 150°C, 100°C, 60°C, and/or any other appropriate temperature. The temperature of the atmosphere within the volume in which the powder is sprayed onto the substrate may also be greater than or equal to 60°C, 100°C, 150°C, 200°C, 250°C, 300°C, and/or any other temperature. Combinations of the foregoing, including temperatures between or equal to 60°C and 300°C are also contemplated, as well as temperatures greater than and less than the ranges listed above, as the present disclosure is not limited by the temperature of the atmosphere within the volume in which the powder is sprayed onto the substrate.

[0047] In view of the above, in some embodiments, the ionically conductive layer may be formed using a spray deposition system. The spray deposition system may include an ionically conductive powder source and a spray chamber including an internal volume. A sprayer may spray the substrate while the substrate is disposed in an atmosphere of the internal volume of the

spray chamber. The sprayer may be configured to aerosolize and spray ionically conductive powder from the ionically conductive powder source towards the substrate within the internal volume of the spray chamber to form the ionically conductive layer on the substrate. In some embodiments, the sprayer may be at least partially disposed within the internal volume of the spray chamber. The internal volume may include an inlet and an outlet, which may optionally include one or more seals associated with the inlet and/or outlet. The one or more seals may be configured to permit the substrate to pass through the inlet and/or outlet and may optionally be formed as a polymeric membrane with an elongated slit and/or cut sized and shaped to permit the substrate to pass through the seal. A feed system may be configured to feed the substrate through the inlet of the spray chamber, past the sprayer, and through the outlet of the spray chamber. In some embodiments, a feed reel, or other appropriate component, of the feed system may be configured to rotate to feed the substrate through the inlet and into the internal volume of the spray chamber. In some embodiments, the feed reel may be configured to rotate with a constant or substantially constant torque. For example, a motor configured to rotate the feed reel may be configured to rotate with a constant or substantially constant torque. In some embodiments, a collection reel may be configured to rotate to collect the substrate having a layer of ionically conductive material through the outlet of the internal volume of the spray chamber. In some embodiments, the rotation of the collection reel may be synced with the rotation of the feed reel. The spray deposition system may include a gas system configured to maintain a pressure of the atmosphere of the internal volume of the spray chamber at a pressure less than a pressure of one or more surrounding volumes.

[0048] The inventors have also recognized having a lower pressure in the interior volume of a spray chamber in which the material is sprayed relative to any surrounding volumes and/or a surrounding ambient atmosphere may help to prevent sprayed material from moving from within the spray chamber into the surrounding volumes. Accordingly, the internal volume of a spray chamber of a spray deposition system may include a gas system configured to maintain a pressure of the atmosphere of the internal volume of the spray chamber at a pressure less than a pressure of one or more surrounding volumes and/or a pressure of the ambient atmosphere according to some embodiments. The gas system may maintain the desired pressure using pumps, vacuum sources, and/or any other appropriate system capable of maintaining the reduced pressure of the internal volume in the spray chamber. In some embodiments, the atmosphere of one or more of the one or more surrounding volumes may also be at an ambient atmosphere (e.g., atmospheric pressure). For example, the pressure of atmospheres of the one or more surrounding volumes may be approximately equal to one atmosphere (approximately 101.325

kPa). As described elsewhere, the one or more surrounding volumes may include an upstream volume and a downstream volume located upstream and downstream relative to the internal volume, respectively. In some embodiments, a pressure of the surrounding volumes may be greater than atmospheric pressure. For example, in such an embodiment, the spray chamber may have a pressure less than atmospheric pressure and/or the one or more surrounding volumes (e.g., an upstream and/or downstream sealed volume adjacent to the spray chamber and connected to the spray chamber by an inlet and/or outlet) may have pressure(s) that are greater than a pressure of both the atmosphere of the spray chamber and the surrounding ambient environment. In some instances the pressures in both the one or more surrounding sealed volumes and the spray chamber may be greater than ambient atmosphere while still providing a reduced pressure within the spray chamber relative to the one or more surrounding sealed volumes. Without wishing to be bound by theory, this may help to further isolate the spray deposition system from the surrounding environment by helping to avoid the ingress of contaminants from the external atmosphere while also helping to contain the sprayed powder within the spray chamber.

[0049] In some embodiments, a difference in the pressure of the atmosphere of the internal volume of the spray chamber relative to the one or more surrounding volumes and/or ambient atmosphere may be less than or equal to approximately 300 kilopascals (kPa), 200 kPa, 100, kPa, 50 kPa, 20 kPa, 10 kPa, and/or any other appropriate pressure. The difference in the pressures of the atmosphere of the internal volume relative to the one or more surrounding volumes and/or ambient atmosphere may also be greater than or equal to 10 kPa, 20 kPa, 50 kPa, 100 kPa, 200 kPa, and/or any other appropriate pressure. Combinations of the foregoing, including pressures between or equal to 10 kPa and 30 kPa are also contemplated, as well as other appropriate pressures. In another embodiment, the pressure differential may be between or equal to 10 kPa and 300 kPa.

[0050] In some embodiments, the atmosphere of the internal volume of the spray chamber may comprise dry air having a humidity level below a desired threshold humidity level for a type of material being deposited. In some embodiments, the atmosphere of the internal volume of the spray chamber may comprise dry air having a relative humidity level that is less than or equal to approximately 1%, 0.9%, 0.8%, 0.7%, 0.6%, 0.5%, 0.4%, 0.3%, 0.2%, 0.1% and/or any other appropriate level of humidity. Depending on the specific materials being used relative humidity levels of the dry air in the atmosphere of the internal volume of a spray chamber may also be used. It should be understood that the dry air provided to the spray chamber may be provided from any appropriate source of dry air (e.g., pressurized dry air, pretreated air that is

subject to a dehumidifying process, recycled air from within the spray chamber that is subject to a dehumidifying process, and/or any other type of dry air source).

[0051] As elaborated on further below, a spray chamber in any of the embodiments disclosed herein may also include one or more air curtain generators associated with the inlet and/or outlet of the spray chamber according to some embodiments. The one or more air curtain generators may be configured to direct air curtains adjacent to the inlet and/or outlet of the spray chamber to help isolate the internal volume from the surrounding volumes and/or ambient atmosphere at least in part by functioning as an in intermediate layer of gas flowing between and isolating the separate interior and exterior environments of the spray chamber.

[0052] In some embodiments, the atmosphere of the internal volume of a spray chamber may include an inert gas. For example, the atmosphere of the internal volume may be comprised substantially of the inert gas (i.e., at least a majority of the atmosphere). The inert gas may comprise a greater portion of the composition of atmosphere within the internal volume of the spray chamber as compared to a composition of the surrounding ambient (e.g., typical) atmosphere. The inert gas may include one or more selected from a group of nitrogen (e.g., N_2), helium (e.g., He), neon (e.g., Ne), argon (e.g., Ar), krypton (e.g., Kr), xenon (e.g., Xe), radon (e.g., Rn), and any other appropriate inert gas as the disclosure is not so limited. In some embodiments, one or more gasses such as nitrogen may be selected to avoid oxidation of the substrate. Oxidation may occur when the substrate is heated, depending on the materials (of the substrate, material being sprayed, and atmosphere) and associated temperatures. The atmosphere may also include any other appropriate gas such as oxygen (e.g., O_2) in any appropriate proportion with any other gas as the disclosure is not so limited.

[0053] In some embodiments, the atmosphere may contain inert gases in a volumetric percentage of less than or equal to approximately 100%, 99%, 95%, 90%, 80%, 70%, 60%, and/or any other appropriate percentage. The atmosphere may contain inert gas in a volumetric percentage of greater than or equal to 50%, 60%, 70%, 80%, 90%, 95%, 99%, and/or any other appropriate pressure. Combinations of the foregoing, including pressures between or equal to 50% and 100% are also contemplated, as well as other volumetric percentages. In some preferred embodiments, the atmosphere may comprise between or equal to 95% and 100%, 99% and 100%, or other desired range of compositions of the one or more inert gasses.

[0054] The inventors have recognized that recycling (e.g., recovering) the gas and material used by the spray deposition system may enable the spray deposition system to use less material and gas, thereby saving time and cost associated with the gas and material. In embodiments where the gas of the atmosphere of the internal volume is a dry gas and/or an inert

gas, it may be especially useful to recycle the gas to reduce the cost associated with providing the desired atmosphere. In some embodiments, the spray deposition system may include a gas and/or material recycling system configured to direct material and gas inside the internal volume of the spray booth to exit the internal volume of the spray booth and re-enter the internal volume of the spray booth. Recycling the gas and/or sprayed material may include filtering the gas and/or material with any appropriate filter as detailed further below.

[0055] As noted above, in some embodiments, a substrate may be heated to help facilitate melting and adhesion of material sprayed onto the substrate. Appropriate temperatures for heating the substrate to may include temperatures greater than a melting and/or curing temperature of a binder of particles sprayed onto the substrate and less than a decomposition temperature of the binder. This may include temperatures of the substrate that are less than or equal to approximately 300°C, 250°C, 200°C, 150°C, 125°C, 100°C, and/or any other appropriate temperature. The temperature of the substrate may also be greater than or equal to 60°C, 100°C, 125°C, 150°C, 200°C, 250°C, and/or any other temperature. Combinations of the foregoing, including temperatures between or equal to 60°C and 300°C are contemplated, as well as temperatures greater than and less than the ranges listed above, as the present disclosure is not limited by the temperature the substrate is heated to.

[0056] While specific types of heaters are detailed below for heating a substrate to a desired temperature, it should be understood that any appropriate type and/or combination of heaters may be used as the disclosure is not limited to how the substrate is heated. This may include heating the substrate using conductive, convective, radiative, resistive heating (e.g., passing a current through the substrate), and/or combinations of these types of heating methods for heating substrate. For example, a substrate may optionally be heated by one or more convective heaters and/or radiative heaters where a hot gas and/or radiation is directed onto the substrate to heat the substrate. In some embodiments, the convective and/or radiative heaters may be disposed upstream of the sprayer. In other embodiments, the spray deposition system may include one or more sliding contact heaters configured to heat the substrate as the substrate is slide across a static heated surface of the heater. In yet another embodiment, the spray deposition system may resistively heat (e.g., Joule heating or Ohmic heating) the substrate by passing a current through at least a portion of the substrate. The current may be passed through the substrate using two or more electrodes that are in electrical contact with the substrate. The electrodes may either be located upstream from a deposition location of the sprayed material and/or one may be positioned upstream and the other downstream from the deposition location such that the substrate may either be headed prior to and/or within a portion of the substrate

located at the deposition location. Internal resistance of the substrate may create heat as current passes through the substrate. For example, a first electrode may be in electrical contact a first portion of the substrate and a second electrode may be in electrical contact with a second portion of the substrate. Current may pass through the substrate between the first electrode to the second electrode. Any appropriate electrodes may be used to pass current through the substrate to resistively heat the substrate as the disclosure is not so limited. This may include, clamps, brushes, rollers, and/or any other appropriate structure capable of being electrically connected to the substrate.

[0057] Typical calendaring of a deposited layer of ionically conductive material (e.g., electrochemical active materials) is done using a fixed gap between each calendaring rollers. That is, the distance of the gap between a first calendaring roller and second associated calendaring roller is fixed and a material layer is directed between the calendaring rollers to be densified. This process is used with typical slurry casting methods as the material layer thickness is constant and uniform. Therefore, a constant calendaring gap will provide relatively uniform and constant densification of the deposited layers. However, the inventors have recognized that spray deposited material layers exhibit thickness variations. Correspondingly, when these layers with varying layer thickness are fed through calendaring rollers with a constant gap thickness, non-uniform (e.g., varying) calendaring force are applied to the different portions of the material layer having different thicknesses by the pair of calendaring rollers. This results in a deposited layer having non-uniform densification across the layer which may impact the performance and reliability of the layers during cycling and aging of the resulting electrochemical cells.

[0058] In view of the above, the inventors have recognized that utilizing calendaring rollers that are controlled based at least in part on a calendaring force of the calendaring rollers, rather than a set gap thickness, may provide a more consistent densification and resulting properties for the one or more spray deposited layers disposed on a substrate. Following from the above, the inventors have recognized that controlling the calendaring rollers to apply a substantially constant calendaring force to a deposited layer of ionically conductive material may improve the quality of the resulting material layer. In one such embodiment, one or more actuators may be configured to control a normal force (e.g., the calendaring force) applied to a material layer passed between a pair of calendaring rollers. For example, the one or more actuators may be configured to displace at least one of the calendaring rollers in a direction that is at least partially perpendicular to a surface of the substrate and associated spray deposited material layer to maintain the calendaring force to be substantially constant. It should be understood that the actuator may be any appropriate actuator, including a pneumatic actuator,

hydraulic actuator, solenoid actuator, motorized actuator, an electro-mechanical actuator, any appropriate combination of the foregoing, and/or any other appropriate type of actuator configured to displace the one or more calendaring rollers as the disclosure is not so limited.

[0059] As someone of ordinary skill in the art would appreciate, adjusting the calendaring force applied to the material layer may also adjust a pressure applied to the material layer by the calendaring rollers. For example, increasing the calendaring force may increase the pressure applied to the material layer and decreasing the calendaring force may decrease the pressure applied to the material layer. As such, calendaring force may be used interchangeably with pressure applied by calendaring rollers as described herein. In embodiments where one calendaring roller of the pair of calendaring rollers is displaced by the actuator, the calendaring roller which is not displaced by the actuator may optionally be fixed in position while still being permitted to rotate. Displacing one or both calendaring rollers such that the calendaring rollers are a lesser distance apart (e.g., a gap thickness is reduced) may increase the calendaring force applied to the material layer, and displacing one or both calendaring rollers such that the calendaring rollers are a greater distance apart (e.g., the gap thickness is increased) may reduce the calendaring force applied to the material layer. In some embodiments, increasing the calendaring force applied to the material layer may increase the density of the material layer and decreasing the calendaring force applied to the material layer may decrease the density of the material layer.

[0060] It should be understood that more than one pair of calendaring rollers may be used to calendar the material layers disclosed herein as the disclosure is not so limited. For example, a first pair of calendaring rollers may be configured to calendar the material layer and a second pair of calendaring rollers disposed downstream relative to the first pair of calendaring rollers may be configured to further calendar the material layer. In some embodiments, the first pair of calendaring rollers may be configured to apply the same calendaring force as the second pair of calendaring rollers. In further embodiments, the second pair of calendaring rollers may be configured to apply a different (e.g., lesser or greater) calendaring force to the material layer than the first pair of calendaring rollers.

[0061] As noted above, the one or more actuators associated with a pair of calendaring rollers may be configured to apply a substantially constant calendaring force according to some embodiments. For example, the one or more actuators may be configured to displace one or both of the calendaring rollers of the pair of calendaring rollers such that the calendaring force applied to the material layer is substantially constant. Applying a substantially constant calendaring force may form a material layer having more a more uniform density across the

formed material layer, as previously discussed. As calendaring force and pressure applied by the pair of calendaring rollers as described herein may be used interchangeably, the spray deposition may be configured to apply a substantially constant pressure to the substrate and any material deposited thereon according to some embodiments.

[0062] In some embodiments, a substantially constant calendaring force, which again may be used interchangeably with a calendaring pressure herein, may vary from a commanded and/or predetermined calendaring force by less than or equal to approximately 20%, 15%, 10%, 5%, 1%, or other appropriate percentage of the commanded and/or predetermined calendaring force depending on the desired level of uniformity for a calendared layer of material. In some embodiments, the variation may be less than 20%. In other embodiments, the variation may be less than 5%. In still other embodiments, the variation may be less than 1%. It should be noted that the above ranges may be used with any of the embodiments of a spray deposition system and related methods disclosed herein.

[0063] The calendaring force applied by the calendaring rollers to a substrate and associated material layer may be controlled in any appropriate fashion. This may include, in some embodiments, controlling the calendaring force using a signal from one or more appropriate sensors. For example, the calendaring force may be sensed using a load cell, resistive force sensor, strain gauge configured to sense the calendaring force, pressure sensor configured to sense the calendaring force, any appropriate combination of the foregoing, and any other appropriate sensor configured to sense the calendaring force. The one or more actuators may be controlled at least in part using the sensed calendaring force to maintain a commanded calendaring force which may also be a substantially constant commanded calendaring force. In some embodiments, sensing the calendaring force may include sensing one or more parameters related to the calendaring force, including an applied force, strain of a portion of the spray deposition system, a pneumatic pressure, a hydraulic pressure, or any other appropriate parameter related to operation of the one or more calendaring rollers and/or the one or more actuators. Accordingly, in some embodiments the one or more actuators may be controlled based at least in part on the one or more sensed parameters related to the calendaring force.

[0064] The calendaring rollers may rotate to calendar the material layer with an associated calendaring torque. The calendaring torque may contribute to providing a desired tension in the substrate during a spray deposition process according to some embodiments. The calendaring torque may be sensed using any appropriate sensor configured to sense the torque of the calendaring rollers. For example, the calendaring torque may be sensed using one or more torque sensors including any appropriate reaction torque sensors, any appropriate rotational

torque sensors, any appropriate multi axis force-torque sensors, any combination thereof, and any other appropriate sensor configured to sense the calendaring torque of the calendaring rollers. The calendaring torque of the calendaring rollers may also be sensed by sensing an associated current of a motor configured to rotate the calendaring roller. In some embodiments, the calendaring torque may be controlled based at least in part by the sensed calendaring torque and/or sensed motor current to maintain a desired calendaring torque applied to the substrate.

[0065] In some embodiments, the calendaring force applied to the material layer in a direction that is substantially perpendicular to the material layer and the underlying substrate by the pair of calendaring rollers may be less than or equal to approximately 10 N, 100 N, 1,000 N, 10,000 N, 20,000 N, 30,000 N and/or any other force. The calendaring force applied to the material layer by the pair of calendaring rollers may also be greater than or equal to 1N, 10 N, 100 N, 1,000 N, 10,000 N, 20,000 N and/or any other force. Combinations of the foregoing, including forces between or equal to 1 N and 30,000 N are also contemplated, as well as forces greater than and less than the ranges listed above, as the present disclosure is not limited by the calendaring force applied to the material layer by the pair of calendaring rollers.

[0066] In some embodiments, the pressure associated with the calendaring force applied to the material layer in a direction that is substantially perpendicular to the material layer and the underlying substrate by the pair of calendaring rollers may be less than or equal to approximately 3000 kPa, 2500 kPa, 2000 kPa, 1500 kPa, 1000 kPa, 200 kPa, 10 kPa, and/or any other pressure. The pressure associated with the calendaring force applied to the material layer by the pair of calendaring rollers may also be greater than or equal to 200 kPa, 1000 kPa, 1500 kPa, 2000 kPa, 2500 kPa, 3000 kPa, and/or any other pressure. Combinations of the foregoing, including pressures between or equal to 10 kPa and 3000 kPa are also contemplated, as well as pressures greater than and less than the ranges listed above, as the present disclosure is not limited by the pressure associated with the calendaring force applied to the material layer by the pair of calendaring rollers.

[0067] To provide the desired calendaring, either one or both of a pair of calendaring rollers may optionally be heated. In embodiments where one calendaring roller of the pair of calendaring rollers are heated, the heated calendaring roller may be configured to contact a surface of a deposited material layer. In embodiments where a plurality of pairs of calendaring rollers are used, any appropriate combination of the one or more pairs of the calendaring rollers may be configured to heat the material layer. Each calendaring roller may be configured to heat the material layer the same amount or a different amount as the disclosure is not so limited. For example, the first pair of calendaring rollers may be heated to a first temperature and the second

pair of calendaring rollers may be heated to a second temperature which may be same as or different than the first temperature. The calendaring rollers may be heated using any appropriate heater or combination of heaters as the disclosure is not limited in this fashion. For example, the calendaring rollers may be heated using a resistive heater, conductive heater, convection heater, radiative heater, combinations of the foregoing, and/or any other appropriate heater. The temperature the calendaring rollers are heated to may depend on a feed rate of the substrate through the spray deposition system and a composition of the material layers being calendared. For example, if the feed rate of the substrate through the spray deposition increases, the calendaring rollers may be heated to a greater temperature.

[0068] In some embodiments, preferably when the spray deposition system is being used to form material layers for non-solid state electrochemical cells, the calendaring rollers may be heated to a temperature less than or equal to approximately 500°C, 450°C, 400°C, and/or any other appropriate temperature. The calendaring rollers may be heated to a temperature greater than or equal to 300°C, 350°C, 400°C, 450°C, and/or any other temperature. Combinations of the foregoing, including temperatures between or equal to 300°C and 500°C are also contemplated, as well as temperatures greater than and less than the ranges listed above, as the present disclosure is not limited by the temperature to which the calendaring rollers may be heated. Please confirm temperature ranges.

[0069] In some embodiments, preferably when the spray deposition system is being used to form material layers for solid state electrochemical cells, the calendaring rollers may be heated to a temperature less than or equal to approximately 150°C, 125°C, 100°C, 75°C, and/or any other appropriate temperature. The calendaring rollers may be heated to a temperature greater than or equal to 75°C, 100°C, 125°C, and/or any other temperature. Combinations of the foregoing, including temperatures between or equal to 75°C and 150°C are also contemplated, as well as temperatures greater than and less than the ranges listed above, as the present disclosure is not limited by the temperature to which the calendaring rollers may be heated.

[0070] In the various embodiments disclosed herein, the temperatures of the various gas flows, substrate, material layers, calendaring rollers, and/or other appropriate feature may optionally be sensed in some embodiments. The temperatures of these separate features may be sensed using any appropriate temperature sensor or combination of temperature sensors configured to measure the temperature of the noted feature. This may include, for example, thermocouples, infrared sensors, resistance temperature detectors (RTD), thermopiles, negative temperature coefficient (NTC) probes/thermistors, digital temperature sensors, non-contact temperature sensors (e.g., pyrometers), any combination thereof, and/or any other appropriate

temperature sensor configured to measure the desired temperature as the disclosure is not so limited. In some embodiments, the temperature of the various features (e.g., a gas flow, the substrate, an internal atmosphere of a spray chamber, one or more calendaring rollers, or other appropriate feature) may be controlled based at least in part on the associated sensed temperature.

[0071] The inventors have further recognized that using plasma to treat a surface of a substrate during any of the spray deposition processes disclosed herein may improve adhesion between the spray deposited ionically conductive layer and the substrate. The plasma may etch (e.g., clean) the surface of the substrate prior to spray deposition of the desired ionically conductive particles which may improve the bonding of the material onto the substrate. The plasma may also charge the substrate such that the attraction of the sprayed particles onto the substrate may be increased relative to a substrate that is not subjected to a plasma treatment. The plasma may also advantageously help to dissipate static energy contained within the system. The dissipation of static energy within the system may be especially advantageous in embodiments where the ionically conductive particles are sprayed onto the substrate in an atmosphere having a relatively low humidity as described herein. Depending on the embodiment, the plasma may be generated and/or directed onto the substrate using one or more of any appropriate type of plasma generator, including but not limited to an air plasma generator, or any other appropriate plasma generator or combination of plasma generators as the disclosure is not so limited. In some embodiments, a plasma may be directed along an entire width of the substrate as the substrate is moved past a plasma generator towards a spray deposition location, such that each portion of the substrate may be plasma treated prior to a spray deposition process being performed. The surface of the substrate may be cleaned and/or etched in any other appropriate fashion in combination with or in place of using a plasma as the disclosure is not limited to plasma for cleaning and/or etching of the substrate. For example, the surface of the substrate may be treated using any appropriate laser (e.g., a laser scanning system) configured to direct energy at the surface of the substrate to clean and/or etch the surface of the substrate in place of or in combination with the aforementioned plasma (e.g., plasma generator).

[0072] As the substrate and material layer move through the spray deposition system, a tension may be maintained in the substrate and the material layer disposed thereon. If there is insufficient tension (e.g., slack) in the substrate and/or material layer, the distance between the sprayer and the substrate may vary, which may result in material being sprayed inconsistently (e.g., non-uniformly) onto the substrate. In some cases, folds and/or tears may form in the substrate and/or material layer as a result of slack, which may result in damage to the substrate

and/or material layer. Non-uniform deposition of the material onto the substrate which may also result in inconsistent densification of the material layer, reducing the quality of the resulting material layer. However, as the substrate is heated (e.g., increases in temperature) during the spray deposition system, the substrate may expand and increase in size (e.g., thermal expansion). As the substrate increases in size, the length of the substrate in a longitudinal direction relative to a direction of movement of the substrate through the spray deposition system may increase and the tension within the substrate may decrease, and accordingly slack may form in the substrate. The amount of expansion resulting from thermal expansion may vary depending on what material the substrate is formed of and a magnitude of the temperature difference the substrate undergoes. Accordingly, the inventors have recognized systems and methods for maintaining a sufficient tension in a substrate during a spray deposition process to avoid undesired slack and deflection of the substrate associated with thermal expansion.

[0073] In one embodiment, a feed system of the spray deposition system may be configured to maintain a tension in the substrate to compensate for thermal expansion of the substrate during spray deposition of the material layer. In some embodiments, the spray deposition system may include at least a first clamp and a second clamp, and one or both of the first clamp and the second clamp may be configured to be displaced to maintain a predetermined tensile force in the substrate. For example, one or both of the first clamp and the second clamp may be configured to be displaced to maintain a substantially constant tensile force in the substrate relative to a commanded and/or predetermined tensile force. The commanded and/or predetermined tensile force may be set at any appropriate desired tensile force as discussed further below. The first clamp and the second clamp may be configured to clamp the substrate with any appropriate force and associated pressure, which may vary depending on the material of the substrate and/or the material being deposited thereon. In some embodiments, the first clamp may be configured to clamp the substrate with a first force and the second clamp may be configured to clamp the substrate with a second force that is the same as or different than the first force.

[0074] The inventors have also recognized that it may be possible to maintain a desired tensile force (e.g., a substantially constant tensile force relative to a commanded and/or predetermined tensile force) within a substrate by controlling the relative feed rate of a substrate between an upstream portion of the spray deposition system and a downstream portion of the spray deposition system. This difference in feed rate may help to account for thermal expansion in a feed direction (i.e., downstream direction) of the substrate and maintain a desired tensile force in the substrate. Controlling the feed rate to maintain tension may be especially useful in

embodiments where the substrate is moved continuously through the spray deposition system. For example, in one embodiment, a first portion of the spray deposition system may use a first feed rate and a second portion of the spray deposition disposed downstream from the first portion may use a second feed rate that is greater than the first feed rate by an amount approximately equal to an amount of thermal expansion of the substrate as it is heated from a first initial temperature to a second temperature greater than the first initial temperature during a spray deposition process.

[0075] In some embodiments, it may be desirable to at least partially shield one or more upstream components from a tensile force applied to a portion of the substrate within a spray location of a system. As previously mentioned, the contact preheaters, rollers, and other appropriate components located between a feed reel, or other feed system, and the spray chamber may resist motion of the substrate through the system. Accordingly, these components may at least partially shield the feed reel from the tensile forces applied to the substrate within the spray chamber during a continuous manufacturing process. For example, the contact preheaters may be configured to help maintain a first tension in a first portion of the substrate that is disposed upstream of the contact preheaters and a second tension that may be the same as or greater than the first tension in a second portion of the substrate that is disposed downstream of the contact preheaters.

[0076] In some embodiments, the tensile force (e.g., commanded and/or predetermined tensile force) applied to a portion of a substrate within a spray chamber by a pair of calendaring rollers, clamps, or other appropriate portion of a spray deposition system, may be less than or equal to approximately 1000 N, 100 N, 10 N, 1 N, and/or any other tensile force. The tensile force applied by the calendaring rollers to the substrate may also be greater than or equal to 1N, 10 N, 100N, 1000 N, and/or any other tensile force. Combinations of the foregoing, including tensile forces between or equal to 1 N and 1,000 N are also contemplated, as well as tensile forces greater than and less than the ranges listed above, as the present disclosure is not limited by the tensile forces applied by the calendaring rollers to a substrate.

[0077] In some embodiments, a substantially constant tensile force applied to a portion of a substrate where material may be sprayed onto the substrate may vary from a commanded and/or predetermined tensile force by less than or equal to approximately 20%, 15%, 10%, 5%, 1%, or other appropriate percentage of the commanded and/or predetermined tensile force depending on the desired level of tension to be maintained in the substrate. In some embodiments, the variation may be less than 20%. In other embodiments, the variation may be less than 5%. In still other embodiments, the variation may be less than 1%. It should be noted

that the above ranges may be used with any of the embodiments of a spray deposition system and related methods disclosed herein.

[0078] In the various embodiments of a spray deposition system and/or related method disclosed herein, the materials may be deposited onto a substrate using any appropriate sprayer or combination of sprayers. In some embodiments, the material may be deposited using one or more corona powder spray guns, triboelectric powder spray guns, any combination thereof, and/or any other appropriate sprayer configured to spray material onto the substrate. In some embodiments, the sprayer may utilize the Venturi effect (e.g., a venturi vacuum) to draw powder material into a heated flow of gas to spray the powder material. The material may be deposited using any appropriate type, number, combination, and arrangement of sprayers as the disclosure is not so limited. The sprayer may be mounted in any appropriate fashion using any appropriate mount or combination of mounts as the disclosure is not so limited. In some embodiments, one or more sprayers may be mounted in a fixed position (e.g., statically mounted) within the spray chamber. In further embodiments, the one or more sprayers may be coupled to one or more motion stages such that the sprayer may be moved in one or more directions associated with the movement of the or more motion stages. Any appropriate sprayer or combination of sprayers as described herein may be used with any appropriate embodiment of the systems and methods as described herein as the disclosure is not so limited. Further, embodiments where sprayers are disposed on a first side of the substrate and the second side of the substrate and accordingly are configured to deposit a material layer on a first surface of the substrate associated with the first side of the substrate and a material layer on a second surface of the substrate associated with the second side of the substrate are contemplated. However, sprayers configured to deposit material onto a single side of a substrate are also contemplated.

[0079] In some embodiments, the substrate as discussed herein relative to the various embodiments may be an electrically conductive substrate such as a metallic foil. The metallic foil may be formed of any appropriate metal and/or metal alloy, including copper, cobalt, nickel, aluminum, gold, platinum, and any appropriate combination thereof. The substrate may be formed with any appropriate thickness, width, and/or length as the disclosure is not so limited. In embodiments where the substrate is continuously fed through a system for depositing material on to the substrate, the substrate may form a continuous length of material extending between a feed reel and a collection reel during operation. It should be understood that while metal foils are described above, any appropriate type of substrate may be used as the disclosure is not so limited. For example, the substrate may be formed as a metallic plate. Therefore, any appropriate

substrate may be used with any appropriate embodiment of the systems and methods described herein as the disclosure is not so limited.

[0080] In some embodiments, a thickness of a substrate in a first direction perpendicular to a longitudinal axis or length of the substrate may be greater than or equal to approximately 0.1 mm, 0.2 mm, 0.3 mm, 0.4 mm, and/or any other appropriate thickness. The thickness of the substrate may also be less than or equal to 0.5 mm, 0.4 mm, 0.3 mm, 0.2 mm, and/or any other thickness. Combinations of the foregoing, including thicknesses between or equal to 0.1 mm and 0.5 mm are also contemplated, as well as thicknesses greater than and less than the ranges listed above, as the present disclosure is not limited by the thickness of the substrate.

[0081] In some embodiments, the width of a substrate in a second direction that is perpendicular to both the length and the thickness of the substrate may be less than or equal to approximately 500 mm, 400 mm, 350 mm, 300 mm, 200 mm, 100 mm, and/or any other appropriate width. The width of the substrate may also be greater than or equal to 100 mm, 200 mm, 300 mm, 350 mm, 400 mm, 500 mm, and/or any other width. Combinations of the foregoing, including widths between or equal to 100 mm and 500 mm are also contemplated, as well as widths greater than and less than the ranges listed above, as the present disclosure is not limited by the width of the substrate.

[0082] In some embodiments, a length of the substrate may be less than or equal to approximately 1 m, 5 m, 10 m, 100 m, 500 m, and/or any other appropriate length. The length of the substrate may also be greater than or equal to 1000 m, 500 m, 100 m, 10 m, and/or any other length. Combinations of the foregoing, including lengths between or equal to 1 m and 1000 m are also contemplated, as well as lengths greater than and less than the ranges listed above, as the present disclosure is not limited by the length of the substrate.

[0083] The material layers as described herein may be formed using any appropriate type of ionically conducting powder. The ionically conducting powder may include a plurality of separate particles. Depending on the embodiment, the powder may be a mixture of separate binder particles and one or more other types of separate particles such that the overall mixture may form an ionically conductive layer of material when deposited onto a substrate. Alternatively, in some embodiments, the material powder may include a plurality of separate ionically conductive particles where each particle may include one or more materials disposed in or at least partially encapsulated in a binder material to provide particles that are precoated with the binder. In some embodiments, the binder may correspond to a thermoplastic binder. It should be understood that any of the materials described herein may be used with any appropriate embodiment of the systems and methods disclosed herein as the disclosure is not so

limited. As used herein, an ionically conductive powder, a spray deposited material, sprayed material, powder, or other similar term may be used interchangeable with the described ionically conductive particles.

[0084] The ionically conductive powders and associated ionically conductive layers formed with the ionically conductive powders as described herein may correspond to material layers of a solid state electrochemical cell dispersed including a solid state electrolyte. However, the ionically conductive powders and associated ionically conductive layers formed with the ionically conductive powders as described herein may also correspond to standard material layers of an electrochemical cell where an electrochemically active material may be dispersed in a binder and the result ionically conductive layer of material may be subsequently saturated with a liquid electrolyte during operation of the electrochemical cell made using these materials. As such, the ionically conductive layers as described herein may be used to form materials for use in solid state electrochemical cells, typical wet electrochemical cells, and/or material layers for use with any other appropriate type of electrochemical cell and/or device as the disclosure is not so limited.

[0085] In some embodiments, powders comprising a plurality of pre-coated particles are described herein. In one embodiment, the powder may correspond to a plurality of particles including a plurality of core particles that are at least partially coated with a layer of binder that is substantially free from a solvent. In some embodiments, the powder may correspond to a plurality of particles including a plurality of core particles that are dispersed in and/or encapsulated by a binder that is substantially free from a solvent. In some embodiments, the binder may include a thermoplastic material described elsewhere herein. In some embodiments, the pre-coated particles may be substantially free of an associated solvent, i.e. are not suspended in a solution or slurry including a solvent to dissolve the binder, prior to being aerosolized, during the spraying process, as well as after deposition. It should be noted that although pre-coated particles are described herein, the disclosure is not so limited, and mixtures of separate particles including any of the described materials can be used with the spray deposition systems and methods described elsewhere herein.

[0086] In some embodiments, the powder may be an ionically conductive powder. In some cases, the ionically conductive powder may be an electrolyte powder, e.g., a powder that is capable of facilitating transport of ionic species between the electrodes, e.g., anode and cathode. In some cases, the ionically conductive powder may be an electrode powder, e.g., a powder comprising electroactive materials that can be used to form the electrodes. In some embodiments, at least one, a majority, or substantially all of the plurality of ionically conductive

particles comprise a thermoplastic polymer and an ionically conductive salt dissolved in the thermoplastic polymer. Depending on the embodiment, at least one, a majority, or substantially all, of the plurality of ionically conductive particles may exhibit a continuous structure with a continuous phase comprising the thermoplastic polymer and an ionically conductive salt solvated and distributed uniformly within the thermoplastic polymer.

[0087] In some embodiments, at least one, a majority, or substantially all, of the plurality of ionically conductive particles included in a powder may include a thermoplastic polymer and an ionically conductive salt dissolved in the thermoplastic polymer with a plurality of inorganic solids (e.g., ceramic or glass particles) and/or electroactive material particles dispersed in the thermoplastic polymer. In some such embodiments, the plurality of ionically conductive particles may comprise a continuous phase of the thermoplastic polymer with the dissolved ionically conductive salts and a dispersed phase comprising inorganic solids and/or electroactive material particles suspended in or at least partially encapsulated by the continuous thermoplastic polymer phase. In some instances, the particles suspended within the continuous thermoplastic polymer phase may be uniformly dispersed within the thermoplastic polymer.

[0088] In some embodiments, the plurality of the ionically conductive particles described herein may have an average maximum cross-sectional dimension, e.g., diameter, of less than or equal to 250 μm. It should be noted that the average maximum cross-section dimension of the plurality of ionically conductive particles may be any average, e.g., such as number-based average, of the plurality of ionically conductive particles. For instance, an average maximum cross-sectional dimension of the plurality of ionically conductive particles may be at least 1 μm, at least 5 μm, at least 10 μm, at least 20 μm, at least 40 μm, at least 60, at least 80, at least 100 μm, at least 200 μm, at least 300 μm, at least 400 μm, at least 600 μm, or at least 800 μm. In some embodiments, the average maximum cross-sectional dimension of the plurality of ionically conductive particles is less than or equal to 1mm, less than or equal to 900 μm , less than or equal to 700 μm, less than or equal to 500 μm, less than or equal to 350 μm, less than or equal to 250 μm, less than or equal to 200 μm, less than or equal to 150 μm, less than or equal to 100 μm, less than or equal to 50 μm, less than or equal to 25 μm, less than or equal to 15 μm, or less than or equal to 5 μm. Combination of the above-referenced ranges are also possible (e.g., at least 1 μm and less than or equal to 250 μm, or at least 20 μm and less than or equal to 100 μm). Other values are also possible.

[0089] Appropriate types of thermoplastic polymers that may be used to form the plurality of ionically conductive particles described herein, include, but are not limited to, any appropriate thermoplastic polymer. Additionally, it should be noted that the deposition of

material layers without the use of a solvent using the ionically conductive particles described herein may enable the use of thermoplastic polymers that may improve properties of a resulting electrochemical cell, but that are not typically used in solvent based slurry casting processes. For example, thermoplastic polymers that are more ionically and/or electronically conductive than typical thermoplastic polymers, but that are not easily soluble in typical solvents, may be used to form the ionically conductive particles. According to certain embodiments, appropriate polymers may include, but are not limited to polyvinylidene fluoride (PVDF), poly(vinylidene fluoride-co-hexafluoropropylene) (PVDF-HFP), polyethylene glycol (PEG), polyvinyl acetate (PVA), polytetrafluoroethylene (PTFE), styrene-butadiene (SBR), polyethylene oxide (PEO), polyacetylene, polyphenylene, polypyrrole, polythiophene, polyaniline, polyphenylene sulfide, poly(vinyl alcohol) (PVOH or PVA); polyethylenimine (PEI); poly(vinylpyrrolidone) (PVP), carbonate-based polymers (e.g., poly(ethylene carbonate) (PEC), poly(propylene carbonate) (PPC), etc.), and/or combinations of the above. In some instances, at least two or more polymers may be combined to form polymer blends. In some cases, the at least two or more polymers may comprise any of the thermoplastic polymers described herein. In one set of embodiments, the polymer blend may include one or more of a carbonate-based polymer. Additionally or alternatively, in some cases, the thermoplastic polymer may comprise any suitable copolymers, e.g., including but not limited to, PVDE-HFP, poly(acrylonitrile–butadiene–styrene) (ABS), poly(ethylene-co-vinyl acetate) (PEVAc), poly(ethylene oxide-co-epichlorohydrin) (PEO-EPI), poly(styrene-co-ethylene oxide) (PS-EO), etc. In some instances, copolymers may also consist of a mixture of polymers having similar chemistries but different molecular weights (e.g. PEG 4,000 g/mol mixed with PEG 35,000 g/mol).

[0090] As mentioned, in accordance with certain embodiments, a plurality of ionically conductive particles may also comprise a plurality of inorganic solids (e.g., ceramic or glasses) and/or electroactive material particles dispersed in a continuous phase of the thermoplastic polymer forming the individual ionically conductive particles. According to some such embodiments, the plurality of inorganic solids and/or electroactive material particles are uniformly dispersed in or at least partially encapsulated by the thermoplastic polymer, e.g., such that little to no particle agglomeration exist. In some such instances, the number of particles (e.g., inorganic solids and/or electroactive material particles) per unit volume of an ionically conductive particle may be substantially the same. During fabrication of the ionically conductive particles, mechanical force, e.g., agitation/mixing, may be applied to uniformly disperse of the plurality of inorganic solids and/or electroactive material particles in the thermoplastic polymer.

[0091] It should be noted that the plurality of inorganic solids disclosed herein may comprise one or more selected from the group of ionically conductive or non-ionically conductive ceramics and/or glasses. In some instances, the plurality of inorganic solids may comprise ionically conductive material that can advantageously facilitate ion transport between the electrodes in an electrochemical cell. For instance, ionically conductive ceramics or glasses may be used in the ionically conductive powders described herein (e.g., electrolyte and electrode powder) to facilitate ion transport in the resultant electrolyte or electrode layers. In view of the above, possible ionically conductive materials may include ceramics such as one or more ionically conductive metal oxides, and/or metal oxides that facilitate the transport of ions through the inorganic solids and/or along an interface with a surrounding thermoplastic polymer matrix. These materials may include, but are not limited to, at least one of Al2O3, SiO2, TiO2, MgO, ZnO, ZrO2, CuO, CdO, Li7La3Zr2O12 (LLZO), and Li2O. Alternatively, and/or in combination with the noted metal oxides, the ionically conducting material may also include an ionically conductive glass such as one or more of Li2S, P2S5, and xLi2S-(1-x)P2S5. While particular types of ionically conductive materials have been listed above it should be understood that any appropriate ionically conductive material may be used as the disclosure is not limited to only these materials. In some embodiments, the plurality of inorganic solids may comprise non-ionically conductive ceramics or glass. In some such embodiments, the non-ionically conductive inorganic solids (e.g. ceramics and/or glasses) may be used to provide structural integrity to a layer which may be advantageous in applications such as solid electrolyte layers and/or separator layers in an electrochemical cell. Of course, it should be understood that ionically conducting and non-ionically conducting inorganic solids are not limited to being used in any particular application.

[0092] In some embodiments, the plurality of inorganic solids, which may include a plurality of inorganic solid particles, disclosed herein comprises lithium-ion conducting additives. For example, the lithium-ion conducting additives may comprise one or more selected from the group of non-lithiated inorganic solids (e.g., non-lithiated ceramics and/or non-lithiated glasses). In some such embodiments, a non-lithiated inorganic solid refers to an inorganic solid that lacks lithium atoms. Advantageously, the presence of such non-lithiated inorganic solids may result in the formation of ionically conductive powders having enhanced lithium ion conductivities. In some embodiments, the non-lithiated inorganic solids comprise ionically conductive non-lithiated ceramics (e.g., metal oxides) and/or ionically conductive non-lithiated glass. Examples of such non-lithiated inorganic solids include, but are not limited to, Al2O3, SiO2, TiO2, MgO, ZnO, ZrO2, CuO, CdO, P2S5, or combination thereof. While

various embodiments herein are directed to lithium-ion conducting additives comprising non-lithiated inorganic solids, it should be understood that the disclosure is not so limited, and that in certain embodiments, the lithium-ion conducting additives may comprise lithiated inorganic solids (e.g., lithiated ceramics and/or lithiated glasses). For example, in some cases, the lithiated inorganic solid comprises a ceramic such as Li7La3Zr2O12 (LLZO).

[0093] In certain embodiments, the electroactive material particles comprise one or more electroactive materials. For instance, possible electroactive materials include, but are not limited to, lithium cobalt oxide (LCO), lithium nickel manganese cobalt oxide (NMC), lithium manganese cobalt oxide (LMCO), lithium iron phosphate (LFP), lithium manganese iron phosphate (LMFP), lithium nickel cobalt aluminum oxide (NCA), lithium titanate (LTO), lithium manganese oxide (LMO), lithium manganese nickel oxide (LMNO), graphite, silicon, sulfur, Prussian Blue (i.e., PB or AxFe[Fe(CN)6], where A is an alkali metal), Prussian Blue analogs (i.e., PBA or AxMAy[MB(CN)6]z·nH2O, where MA and MB are transition metals typically selected from the group of Mn, Fe Co, Ni, Cu, and Zn, and A is typically selected from the group of Li, Na, or K), Prussian White (i.e., PW or Na2CoFe(CN)6), and/or combinations thereof. While particular types of electroactive materials have been listed above it should be understood that any appropriate electroactive material may be used as the disclosure is not limited to only these materials. In embodiments in which the battery is a sodium ion battery, the electroactive material particles (e.g., cathode powders) may include one or more of electroactive materials (e.g., cathode electroactive materials) selected from the group of Prussian Blue, Prussian Blue analogs, and Prussian White. In some embodiments, the one or more of electroactive materials selected from the group of Prussian Blue, Prussian Blue analogs, and Prussian White comprise sodium (e.g., where A stands for Na in AxFe[Fe(CN)6], AxMAy[MB(CN)6]z·nH2O, etc.).

[0094] In some embodiments, at least one of the plurality of ionically conductive particles comprises one or more additives. In some embodiments, the one or more additives are dissolved or dispersed in the thermoplastic polymer. In some such embodiments, the one of more additives comprises a plasticizer. Non-limiting examples of a plasticizer include, but is not limited to succinonitrile (SN), glutaronitrile (GN), etc.

[0095] As previously introduced, the systems and methods disclosed herein may improve a spray deposition system by improving the quality of the material layer being manufactured. One or more embodiments of the systems and methods as disclosed herein may be implemented separately or in conjunction as the disclosure is not so limited. A material layer being spray

deposited using the systems and methods disclosed herein, such as an ionically conductive material layer, may exhibit improved adhesion to the substrate and the material layer may be more uniform, resulting in improved electrochemical properties and performance. The use of the disclosed dry spray deposition methods and systems may also reduce the energy consumption, material consumption, and time needed to form an electrode of an electrochemical cell as compared to the evaporative solvent based slurry casting processes used in typical battery manufacturing processes.

[0096] The systems and methods as disclosed herein may be used to form a material layer such as an ionically conductive layer for use as an anode layer, a cathode layer, and/or an electrolyte or separator layer for use within an electrochemical cell. In some embodiments, the systems and methods disclosed herein may be used to form lithium ion, lithium metal, sodium based, sulfur based, and/or any other appropriate type of electrochemical cell or portion of an electrochemical cell. In some embodiments, the systems and methods disclosed herein may be used to form liquid electrolyte electrochemical cells. Liquid electrolyte electrochemical cells as described herein may refer to an electrochemical cell which includes electroactive materials and a liquid electrolyte that is added to the cell after formation of the electrode layers. In some embodiments, the systems and methods disclosed herein may be used to form solid state electrochemical cells. Solid state as used herein may refer to an electrochemical cell or a portion of an electrochemical cell that is substantially free from liquid electrolyte and rather includes one or more solid electrolytes in the anode, cathode, and intermediate electrolyte or separator layer.

[0097] As referred to herein, a conductive heater or heating by conductance may involve transferring heat from a first object and/or portion of the first object to a second object and/or portion of the second object, where there is a temperature difference (e.g., temperature gradient) between the first object and the second object. The first object and the second object may be in direct or indirect thermal contact with one another, and the conductive heating may be the transfer of heat within, through, and across the bodies of the first object and the second object.

[0098] As referred to herein, a resistive heater, resistance heater or heating by resistance may involve passing current through an electrically conductive material having an electrical resistance to produce heat. Any resistive heater described herein may be configured to heat in any appropriate manner. Resistive heating as described herein may involve applying current to an object (e.g., a substrate), thereby heating the object due to the passage of the current through the object. For example, two or more clamps, or other electrodes, may be electrically connected to a substrate and apply current to one or more portions of the substrate to heat the substrate.

[0099] As referred to herein, a convective heater or heating by convection may involve the transfer of heat (e.g., heating) due to the movement of a fluid (e.g., liquid or gas). In some embodiments, a convective heater may heat and circulate a fluid, such as a gas, thereby transferring heat from the fluid to an atmosphere or object the fluid is directed towards. For example, a convective heater as described herein may include a panel heater, fan heater, oil heater, any other convective heater, and any appropriate combination thereof as the disclosure is not so limited.

[00100] As referred to herein, a radiative heater or heating by radiation may involve transferring heat to an atmosphere or object via radiant heat. Any appropriate radiative heater configured to convert thermal energy into electromagnetic energy (e.g., radiant heat) to heat an atmosphere or object may be used herein as the disclosure is not so limited.

[00101] As described in the various embodiments of a spray deposition system and/or related method disclosed herein, a substrate may move through the spray deposition system in a downstream direction. For example, in some embodiments, the substrate may move in a downstream direction from a feed reel through the spray deposition system and may move collected onto a collection reel during a continuous manufacturing process. Alternatively, this movement of the substrate through the spray deposition system may be performed in a semi-continuous manner where the material may be grasped by a first clamp and a second clamp during a spray deposition process and the substrate may move in a downstream direction from the first clamp towards the second clamp to align an uncoated portion of the substrate with the one or more sprayers. In yet other embodiments, a stationary substrate may be positioned in a desired spray location and the substrate may be held stationary during a spray deposition process and it may be replaced with a separate uncoated substrate after spraying a desired material layer onto the current substrate using a batch manufacturing process.

[00102] In embodiments, where a continuous, or semi-continuous spray deposition process is performed, an upstream direction as referred to herein may represent a direction of movement that is opposite to the downstream direction of movement of a substrate through the system (i.e., in a direction oriented towards a feed system such as the feed reel along a path of travel of the substrate). Correspondingly, the downstream direction may refer to a direction that is oriented towards the collection system (i.e., the collection reel) along a path of travel of the substrate through the system. In such embodiments, the feed reel and collection reel may rotate to move the substrate through the spray deposition system from the feed reel towards the collection reel in a downstream direction. In some embodiments, the substrate may move in the downstream

direction from the feed reel towards the sprayer and may move in the downstream direction from the sprayer towards the collection reel.

[00103] As referred to herein, a feed rate may refer to a speed of movement of a substrate through a spray deposition system. For example, the feed rate may refer to the speed of movement of the substrate through the spray deposition system in the downstream direction. In some embodiments the feed rate may be selectively adjusted manually or automatically. For example, the feed rate may be adjusted depending on the material being sprayed and/or the material of the substrate. The feed rate may also be adjusted based on one or more parameters of any appropriate portion of the spray deposition system. For example, the one or more parameters may include the temperature of one or more portions of the spray deposition system, such as the substate, calendaring rollers, gas preheaters, contact preheaters, any appropriate heater of the spray deposition system, the atmosphere of the internal volume of a spray chamber, any appropriate combination thereof, and/or any other appropriate parameter of the spray deposition system. The feed rate may also be adjusted based at least in part on other parameters including, but not limited to sensed pressures, torques, forces, any combination thereof, and any other appropriate parameter of the spray deposition system.

[00104] It should be understood that the disclosure of the ranges, listings, and general description of components including temperatures, forces, pressures, types of sensors, material compositions, and other parameters may be used either separately or in combination with one another in any one of the embodiments of a spray deposition system and/or method disclosed herein.

[00105] For the sake of clarity, the various sealed volumes and housings in the embodiments depicted in the figures are either shown schematically with boxes and/or with openings shown in the illustrated structures. However, it should be understood that the sealed volumes, housings, chambers, and other similar structures described herein may include any appropriate combinations of solid panels, seals, flexible impermeable cowls, frames, combinations of the forgoing, and/or other appropriate components in any appropriate manner to provide a desired amount of isolation of a volume relative to an adjacent volume and/or the ambient atmosphere. It should also be understood that a sealed volume as disclosed herein may not refer to an absolute seal and isolation. Instead, a sealed or isolated volume may refer to appropriate types of seals for the desired applications that at least partially isolate the different volumes from each other and/or the ambient atmosphere such that one or more parameters associated with the atmospheres in these different volumes may be different relative to each other and/or the ambient atmosphere (e.g., temperature, pressure, composition, etc.).

[00106] Turning to the figures, specific non-limiting embodiments are described in further detail. It should be understood that the various systems, components, features, and methods described relative to these embodiments may be used either individually and/or in any desired combination as the disclosure is not limited to only the specific embodiments described herein.

[00107] A spray deposition system 100 according to some embodiments is depicted in Figs. 1-5. The spray deposition system may be configured to deposit a material layer, such as an ionically conductive layer, onto a substrate 101. The substrate 101 may move through the spray deposition system 100 beginning at a feed reel 110 disposed on a feed side 102 of the system. The substrate 101 may enter an internal volume 104 of a spray chamber, which may optionally be surrounded by an internal volume chassis 105 or other appropriate housing. The portion of the substrate 101 disposed in the internal volume 104 may have a material layer deposited thereon by a sprayer 108 oriented towards the substrate that emits a spray of ionically conductive particles towards the substrate when the substrate is disposed in the internal volume of the spray chamber. The spray nozzle 120 and other appropriate portions of the sprayer 108 may be at least partially disposed within the internal volume 104 of the spray chamber. For the sake of clarity, the side of the chamber is illustrated with an open window. However, a cowl, not depicted may be connected to the chassis 105 or other housing and the sprayer 108 to seal the sprayer and chamber. Alternatively, the one or more sprayers may be statically mounted within the interior of the chamber (e.g., on a wall or other portion of the chamber internal volume 104). While a single sprayer is depicted, the use of multiple sprayers oriented towards different portions of the substrate, including opposing first and second sides of the substrate, is also contemplated. The substrate 101 may be moved in a downstream direction through the internal volume 104 of the spray chamber past the one or more sprayers such that the substrates exits the internal volume 104 prior to being directed towards the collection reel 112 disposed on a collection side 106 of the system. The substrate 101 exiting the internal volume 104 may have a material layer deposited thereon, such as an ionically conductive layer.

[00108] In the depicted embodiment of Fig. 1, the feed reel 110 may rotate to unwind the substrate 101 from the feed reel and to move the substrate in a downstream direction through the spray deposition system 100. Similarly, the collection reel 112 may rotate to collect (e.g., wind onto) the substrate 101 onto the collection reel as the substrate is moved in the downstream direction. The downstream direction is indicated in Fig. 1 by the arrows shown on a surface of the substrate 101 that are oriented in a direction extending from the feed reel 110 towards the collection reel. However, it should be understood that a non-linear path of the substrate through the system may also be used in which case the direction of motion of the substrate through the

system moving between the feed and collection reels may be the downstream direction at each location between the feed and collection reels. The feed reel 110 and/or the collection reel 112 may be oriented vertically according to some embodiments. The feed reel 110 and the collection reel 112 may be rotated using any appropriate actuator, including but not limited to a motor. For example, corresponding motors may be coupled to the feed reel 110 and collection reel 112. The motors may be configured to rotate the feed reel 110 and collection reel 112 in a desired direction with a desired feed rate. In some embodiments, the feed rates of the feed reel and the collection reel may be different. Additionally, the feed reel 110 and/or the collection reel 112 may include torque sensors configured to sense torques applied by the feed reel 110 and/or the collection reel to the substrate, as described further below.

[00109] One or more rollers 111 configured to contact the substrate 101 may be included in any appropriate portion of the spray deposition system 100 including the feed side 102, internal volume 104, and collection side 106. The one or more rollers 111 may be configured to direct the substrate in a desired direction. Thus, in some embodiments, the one or more rollers 111 may be disposed at any one or more appropriate locations downstream from the feed reel 110 and upstream from the internal volume 104 and/or downstream from the internal volume 104 and upstream from the collection reel 112.

[00110] In some embodiments, the spray deposition system 100 may include contact preheaters 103 configured to pre-heat the substrate 101 prior to it passing into the internal volume 104 of the spray chamber. While the contact preheaters 103 may be disposed in any appropriate position of the spray deposition system 100, in the depicted embodiment of Fig. 1, the contact preheaters are disposed downstream of the feed reel 110 and upstream of the internal volume 104. Thus, contact preheaters may be configured to heat the substrate to a desired temperature prior to passing into the internal volume 104 of the spray chamber. The specific temperature may correspond to any appropriate temperature of the substrate as previously disclosed above, though in some embodiments, the preheated temperature of the substrate may be less than a temperature of the substrate within a deposition location in the internal volume of the spray chamber.

[00111] As best shown in Fig. 4B, the one or more contact preheaters 103 may be in thermal contact with the substrate 101 and may heat the substrate at least via conduction. In some embodiments, the contact preheaters 103 may be configured to have a relatively high surface area to increase the heat transfer from the contact preheaters 103 to the substrate 101. In instances in which multiple contact preheaters are used, the contact preheaters may be offset from one another and may include correspondingly curved surfaces such that the substrate 101

may follow a non-linear or serpentine path of movement through the plurality of contact preheaters 103. Optionally, the contact preheaters may provide some level of resistance to movement of the substrate through the system which may both help to maintain a tension in at least one portion of the substrate downstream from the contact preheaters 103 and help to shield the feed reel 110 from tensions applied to the substrate downstream from the contact preheaters 103.

[00112] The contact preheaters 103 may be formed out of any appropriate material or combination of materials. For example, a portion of the contact preheaters 103 which contacts the substrate 101 may be formed of hardenable steel or other appropriate abrasion resistant material (e.g., hardened 440 stainless steel and optionally polished). While steel or other appropriate abrasion resistant materials may provide sufficient hardness for the contact preheaters 103 to avoid premature wear of the contact preheaters 103 from sliding movement of the substrate 101 past the contact preheaters 103, these materials may not offer a desired level of thermal conductivity. Thus, a contact preheater 103 may include a thermally conductive insert thermally connected to the abrasion resistant layer oriented towards the substrate that has a thermal conductivity that is greater than a thermal conductivity of the abrasion resistant layer. This may include inserts made from copper, aluminum, or other appropriate thermally conductive material. During use, heat may be transferred from a heater thermally coupled to the insert to the abrasion resistant material layer configured to contact the substrate 101 and into the substrate 101. The use of the high thermal conductivity insert may help to provide a more uniform heat distribution across the portion of the contact preheaters 103 configured to contact the substrate 101.

[00113] As introduced above, the contact preheaters 103 may be offset by an appropriate distance to form a serpentine path and help maintain tension in the substrate 101. Positioning the contact preheaters offset 103 from one another (e.g., in a direction perpendicular to the downstream direction) may help to create resistance and/or drag on the substrate 101 in a direction that is opposite to the downstream direction, thereby helping to create and/or maintain tension in at least a portion of the substrate 101 (e.g., a portion of the substrate 101 disposed upstream from the contact preheaters 103). In some embodiments, the contact preheaters 103 may be moveable and accordingly the distance the contact preheaters 103 are offset by may be adjustable. This adjustment may either be done manually and/or using one or more associated actuators. In further embodiments, the contact preheaters 103 may be fixed in position and as such the distance by which the contact preheaters 103 are offset by may be fixed.

[00114] In some embodiments, the contact preheaters 103 may be offset by a distance greater than or equal to approximately 10 mm, 15 mm, 20 mm, 25 mm, and/or any other appropriate distance. The contact preheaters may also be offset by a distance greater than or equal to 40 mm, 30 mm, 25 mm, 20 mm, 15 mm, and/or any other distance. Combinations of the foregoing, including distances between or equal to 10 mm and 40 mm, or more preferably between or equal to 20 mm and 30 mm, are also contemplated, as well as distances greater than and less than the ranges listed above, as the present disclosure is not limited by the distance the contact preheaters are offset by. Please provide a range of distances the offset contact preheaters may be offset by, if you believe it should be included.

[00115] As noted previously above, a spray deposition system 100 may also optionally include one or more plasma generators 126 configured to generate and direct plasma towards the substrate 101. While the plasma generators 126 may be disposed in any appropriate position of the spray deposition system 100, in the depicted embodiment of Fig. 1 the plasma generators 126 are disposed downstream of the feed reel 110 and contact preheaters 103 and upstream of the internal volume 104. In some embodiments, it may be preferable to position the plasma generators 126 proximate to an upstream inlet of the internal volume 104 which may help to minimize the time between plasma cleaning of the substrate 101 and spraying a desired material layer on to the substrate 101. While not depicted in Fig. 1, the plasma generators 126 may also be disposed within a housing and/or may be mounted to any appropriate portion of the spray deposition system 100 as the disclosure is not so limited. Additionally, the one or more plasma generators 126 may correspond to a plurality of plasma generators configured to direct plasma onto an entire width, and in some instances opposing sides, of the substrate 101.

[00116] As best seen in Fig. 4A, in embodiments, in which the spray deposition system 100 is operated in a semi-continuous fashion, the system may optionally include a first clamp 114 and a second clamp 116. In the depicted embodiment, the first clamp is disposed downstream from the feed reel 110, contact preheaters 103, and plasma generators 126 and is disposed upstream from the internal volume 104 and sprayer 108. In the depicted embodiment of Fig. 1, the second clamp 116 is disposed downstream from the internal volume 104 and sprayer 108 and is disposed upstream from a pair of calendaring rollers 118 and collection reel 112. It should be understood however, that the positions of the first clamp 114 and the second clamp 118 are not limited to the depicted embodiment and rather the first clamp 114 and the second clamp 116 may be disposed in any appropriate position of the spray deposition system 100 as the disclosure is not limited in this fashion. As previously discussed, the first clamp 114 and the second clamp 116 may be configured to function as electrodes that pass a current through the

substrate to heat the substrate between the two clamps. However, the use of other structures such as brushes, calendaring rollers, or other appropriate types of electrodes and/or the use of different types of heaters are also contemplated.

[00117] As also shown in the depicted embodiment, a material, such as the disclosed ionically conductive particles, may be deposited onto the substrate 101 using one or more sprayers 108. In some embodiments, the material may be sprayed from the depicted sprayer 108 via the spray nozzle 120. The sprayer 108 may be coupled to a material source, such as an ionically conductive powder source according to some embodiments. The sprayer 108 may also be coupled to a gas source, which may optionally be heated by a gas preheater 122. In some embodiments, the sprayer may be moveable in one direction, two directions, three directions, or any other appropriate number of directions (e.g., rotatable) using a sprayer movement system 124 as discussed further elsewhere. It should be understood however that the current disclosure is in no way limited to a moveable sprayer, and conversely the inventors have contemplated the use of one or more sprayer that are fixed in their position and orientation relative to a substrate moving through the internal volume 104 of the spray chamber. It should also be appreciated that the inventors have contemplated using a plurality of sprayers to deposit the material layer on either one or both of the opposing surfaces of the substrate, and the current disclosure is in no way limited to the use of a single sprayer or spray nozzle. For example, the spray deposition system may include 2 sprayers, 3, sprayers, 4 sprayers, and/or any other appropriate number of sprayers in any desired configuration to provide a desired spray coverage of a substrate positioned within an internal volume of the spray chamber as the disclosure is not so limited.

[00118] The spray deposition system 100 may also include a material collector 128 configured to collect material from the internal volume 104. In some embodiments, the material collected by the material collector 128 is material that has not adhered to the substrate 101 during a spray deposition process and has fallen vertically down into the material collector 128. In the depicted embodiment of Fig. 1, the material collector 128 includes a portion formed in a trough-like geometry that is disposed within a bottom portion of the housing 105 of the spray chamber. However, the material collector is not limited to the depicted geometry and configuration as shown in Fig. 1. In some embodiments, the material collector 128 may be included in an overall material and gas recycling system, as discussed further below.

[00119] Referring specifically to Figs. 2-3 and 5, these figures highlight various components of the spray deposition system 100 according to some embodiments. While the substrate 101 is not shown in Figs. 2-3 and 5, the other portions of the spray deposition system 100 depicted in Figs. 2-3 and 5 are substantially identical to those depicted in Fig. 1. Portions of

the collection side 106 including the second clamp 116 and the exterior of the internal volume housing 105 proximate to the collection side 106 may be more clearly seen in the depicted embodiment of Fig. 2. Portions of the spray deposition system 100 disposed on the opposite portion of the spray deposition system 100 from the sprayer 108, including the gas preheater 122 may be more clearly seen in Fig. 3. An atmosphere within the internal volume 104 may be heated using the gas preheater 122 which is in fluid communication with an appropriate gas source and the internal volume 104 according to some embodiments. For example, the gas preheater 122 may be fluidly coupled to the internal volume 104 and may be configured to heat a flow of gas and direct the heated flow of gas into the internal volume 104. The gas preheater 122 coupled to the internal volume 104 may be substantially the same as or different than the gas preheater 122 coupled to the sprayer 108. In some embodiments, one or more gas preheaters 122 of the spray deposition system may include one or more sensors configured to sense a temperature and/or flow rate of the flow of gas entering and/or leaving the gas preheater. Sensing the flow of gas may provide information regarding how much gas is entering or exiting the internal volume 104, and one or more portions of the spray deposition system may be controlled based at least in part on the sensed flow. For example, by controlling a flow of gas into and out of the internal volume 104, it may be possible to provide a desired pressure differential within the internal volume as previously discussed. This may include the use of active control of the gas preheater and/or other components to maintain the desired pressure differential and/or predetermined flow rates into and out of the system may be commanded and implemented with each of these components to provide the desired pressure differential.

[00120] A top view of the spray deposition system 100 is shown according to some embodiments in Fig. 4A. As described herein, the internal volume 104 may have one or more surrounding volumes disposed around the housing 105. For example, a first sealed volume 202, a second sealed volume 204, and the surrounding ambient environment are as shown in the depicted embodiment of Fig. 4A. The first sealed volume 202 may be disposed upstream from the internal volume 104 and may include one or more seals 204 configured to permit the substrate 101 to pass through. The second sealed volume 208 may be disposed downstream from the internal volume 104 and may also include one or more seals 204 configured to permit the substrate 101 to pass between the different volumes while helping to isolate the separate volumes and the ambient environment from one another. Any appropriate portion of the spray deposition system 100 as described herein may be disposed within the first sealed volume 202 or second sealed volume 208. In the depicted embodiments of Figs. 4A-4B, the first sealed volume 202 is shown as a rectangle formed with dashed lines, and the seals 204 are shown as ovals

formed with dashed lines. Similarly, in the depicted embodiments of Figs. 4A and 4C, the second sealed volume 208 is shown as a rectangle formed with dashed lines, and the seals 204 are shown as ovals formed with dashed lines.

[00121] In the depicted embodiment, the seals 204 are depicted as being positioned on an upstream portion of the first sealed volume 202, between the first sealed volume 202 and the internal volume 104 of the spray chamber, between the second sealed volume 208 and the internal volume 104 of the spray chamber, and a downstream portion of the second sealed volume 208. As illustrated in the figures, the substrate 101 passes through each of these seals as the substrate 101 is moved in a downstream direction through the system. In some embodiments, the seals located upstream from the one or more spray nozzles 120 may be configured to at least partially seal against an associated housing of the depicted volume and the bare substrate. For example, a membrane seal with a slit or thin elongated opening sized and shaped to permit passage of the substrate therethrough may be used. The seals 204 located downstream from the one or more spray nozzles 120 may be associated with portions of the substrate coated with a spray deposited material layer. Thus, openings in a seal may be sized and shaped to accommodate passage of the substrate and the one or more spray deposited material layers disposed thereon through the opening. In some instances this may be done without contacting the spray deposited material layers with the opening through the seal as the deposited layers may be susceptible to damage. However, instances in which contact between a seal and the deposited layers occurs are also contemplated.

[00122] As noted previously, the one or more sprayers 108 as described herein may be configured to spray material, such as ionically conductive particles towards the substrate. Particles sprayed from the sprayer 108 that do not adhere to the surface of the substrate and/or are not collected by the material collector 128 may become suspended or otherwise dispersed within the internal volume 104. As previously discussed, powder may damage components of the spray deposition system if not properly contained. Accordingly, the inventors have recognized benefits associated with providing a covering (e.g., a cowl) configured to prevent particles exiting through an opening in the housing 105 of the spray chamber towards the sprayer 108. Thus, in instances in which an externally mounted, and optionally moveable sprayer, is used, a cowl 206 may be coupled to the housing 105 to maintain a seal between the housing and the sprayer and maintain the desired isolation of the internal volume 104 of the spray chamber. The cowl 206 may also be coupled to any appropriate portion of the sprayer 108, including the spray nozzle 120 and/or any other appropriate portion of the sprayer. As previously discussed, the sprayer 108 may be movable in at least one direction according to

some embodiments. As such, the cowl 206 may be configured to sufficiently flexible to permit movement of the sprayer in at least one direction while maintaining a seal between the internal volume 104 and the surrounding environment. The cowl may be formed of any appropriate flexible impermeable material including but not limited to plastic films, metalized plastic films, metal foils, plastic-ceramic films, ceramic embedded metal foils, ceramic embedded plastic films, and/or any other appropriate material. Of course, instances in which the one or more sprayers 108 are fixedly mounted and sealed to a solid portion of a housing forming the internal volume of the spray chamber (e.g., using a pass through seal) without the use of a cowl or other flexible seal are also contemplated.

[00123] As described previously above, the spray deposition system 100 may optionally include any appropriate type, number, and/or arrangement of heaters disposed within an internal volume 104 of the spray chamber. For example, as shown in the depicted embodiment of Fig. 4A, one or more contact heaters 132 may be configured to contact and heat the substrate 101 as the substrate 101 slides across a surface of the one or more contact heaters 132. Alternatively, radiant heaters may be used to radiate heat onto an uncoated surface of the substrate 101. Additionally, as previously discussed, one or more electrodes, such as the first and second clamps 114 and 116, or other appropriate arrangement of electrodes, may be used to pass a current through the substrate 101 to heat the substrate. In either case, the one or more heaters may heat a portion of the substrate disposed in a spray location adjacent to the one or more sprayers 108 to a predetermined temperature 101 that is preferably greater than a melting temperature of a binder of the powder material sprayed onto the substrate 101. The specific temperature may correspond to any of the substrate temperatures disclosed herein and may vary based on the specific materials being sprayed onto the substrate 101.

[00124] Fig. 4B illustrates a close up view of the first sealed volume 202. In the figure, the first sealed volume 202 may form a sealed volume such that the first sealed volume 202 comprises a first sealed volume atmosphere, which may have properties different than surrounding volumes. For example, the first sealed volume 202 may have a pressure, composition, humidity level, temperature, and/or any other appropriate property that may be different than surrounding volumes such as the internal volume 104 of the spray chamber and/or a surrounding ambient atmosphere. Of course, the disclosure is not limited to any volume having differences in properties than surrounding volumes, and as such that first sealed volume 202 may have the same atmosphere as the internal volume 104 and/or the second sealed volume 208. As shown in the depicted embodiment of Figs. 4A and 4B, the contact preheaters 103, first clamp 114 (which may be any other appropriate current source as described herein), and one or

more plasma generators 126 may be disposed within the first sealed volume 202. As previously mentioned, any appropriate portion of the spray deposition system 100 may be disposed in the first sealed volume 202, including the feed reel 110, one or more rollers 111 configured to help guide path of the substrate 101 through the system, any combination thereof and any other appropriate portion of the spray deposition system 100 as the disclosure is not so limited.

[00125] As also shown in Fig. 4B, in some embodiments, the first clamp 114 may be actuated to move between an unclamped configuration in which the first clamp 114 is spaced apart from the substrate 101 and a clamped configuration in which the first clamp 114 is clamped against the substrate 101. Arrows 406 as shown in Fig. 4B indicate a direction of movement of the first clamp between the clamped and unclamped configurations according to some embodiments. As shown, the first clamp 114 may be configured to move in a direction perpendicular to an adjacent surface of the substrate 101. A controller 402 and a power source 404 may be coupled to the contact preheaters 103, one or more plasma generators 126, and first clamp 114. The controller 402 may include one or more processors and associated non-transitory computer readable memory including processor executable instructions thereon that when executed cause the controller to control one or more operations of the contact preheaters 103, one or more plasma generators 126, and first clamp 114. In some embodiments, the controller 402 may be configured to obtain one or more sensed parameters associated with the spray deposition system 100 and may be configured to control one or more other portions of the spray deposition system 100 based at least in part on the sensed parameters as will be discussed further with regards to Fig. 14. The power source 404 may be configured to power (e.g., provide electrical power to) the contact preheaters 103, one or more plasma generators 126, and first clamp 114. In some embodiments, the pressure of the first sealed volume 202 may be provided by one or more pumps, a pressurized gas source, and/or other appropriate type of gas source. For example, the first sealed volume 202 may have a positive or negative pressure provided by a pump or other gas or vacuum source (not shown) fluidly coupled to the first sealed volume 202.

[00126] The collection side 106 of the spray deposition system 100 according to some embodiments is shown in greater detail in the depicted embodiment of Fig. 4C. Similar to the above, one or more portions of the collection side 106 may be disposed within a second sealed volume 208, where the second sealed volume 208 is indicated by a box formed with dotted lines. For example, in the embodiment depicted by Fig. 4C, the second clamp 116, the gas preheater 122, and the pair of calendaring rollers 118, as well as the associated one or more actuators, are disposed within the second sealed volume 208. It is contemplated however, that any of the aforementioned portions of the spray deposition system may not be disposed within the second

sealed volume 208 as the disclosure is not limited to any portion of the spray deposition system being disposed within or outside of the second sealed volume 208.

[00127] In some embodiments, the second sealed volume 208 may have an atmosphere with a positive pressure 210 relative to the internal volume of the spray chamber and/or the surrounding ambient atmosphere. The positive pressure may be formed and/or maintained using any appropriate pressure source including, for example one or more pumps, pressurized gas cylinders, and/or any other appropriate gas source configured to provide a positive pressure to the second sealed volume 208. In some embodiments, the second sealed volume 208 may have a second sealed volume inlet and a second sealed volume outlet, one or both of which may include one or more seals 204. The substrate may enter the second sealed volume 208 through the second sealed volume inlet and may exit the second sealed volume through the second sealed volume outlet. The seals 204 may be configured to permit the substrate to pass through the seals while maintaining a seal between adjacent volume. For example, the one or more seals may be configured to seal the internal volume such that sprayed material is at least partially prevented from entering the one or more surrounding volumes (e.g., second sealed volume) or the ambient atmosphere. The seals 204 may also help to at least partially isolate the internal volume 104 of the spray chamber, the second sealed volume 208 both from one another and the surrounding ambient atmosphere to help to maintain the properties of the internal volume, such as the desired positive pressure. interior volume 104 of the spray chamber into the second sealed volume 208

[00128] As previously discussed, and as shown in Fig. 4C, during operation, the substrate 101 may move in the downstream direction from the internal volume 104 towards the collection reel 112. Accordingly, the substrate may move in the downstream direction from the internal volume 104 of the spray chamber into the second sealed volume 208 and may also move from the second sealed volume 208 to the collection reel 112. Again, one or more rollers 111 may be disposed in any appropriate position along a length of the substrate on the collection side 106 to help guide a path of the substrate through the system. For example, a roller 111 is shown in the depicted embodiment of Fig. 4C disposed between the collection reel 112 and the second sealed volume 208. The roller 111 is configured to contact the substrate 101 to provide structural support to the substrate 101 and guide it towards the collection reel 112. The roller 111 may be configured to either rotate actively (e.g., the roller is rotated by a motor) or passively (e.g., the roller is rotated by the movement of the substrate against the roller).

[00129] As shown in both Figs. 4B and 4C, in some embodiments, the first sealed volume and/or the second sealed volume 208 may include one or more air curtain generators that may generate and direct air curtains 212 towards and/or across a seal 204 disposed between the

interior volume 104 of the spray chamber and the associated first and/or second sealed volume. Again the seals 204 may be disposed on an inlet and/or outlet from the interior volume 104 to the associated sealed volume. In the depicted embodiments, the flows of gas from the air curtains 212 are indicated by the dashed arrows. This flow of gas may help to prevent particles within the internal volume 104 of the spray chamber from traveling into the first and/or second sealed volumes 208. In some embodiments, the flow of gas of the one or more air curtain 212 may also help to maintain the pressure (e.g., the positive pressure 210) of the second sealed volume 202 and 208. While two dashed arrows indicating the flow of gas are shown in Fig. 4C, it should be understood that the flow of gas may be applied in any appropriate number of directions and in any appropriate direction, as the disclosure is not so limited. While air curtains are depicted as being directed towards the seals between the sealed volumes and the internal volume of the spray chamber, air curtains may also be directed towards a seal between the first and/or second volume and the surrounding ambient atmosphere as well as the disclosure is not limited in this fashion.

[00130] As previously mentioned, one or more portions of the spray deposition system 100 may be configured to heat the substrate 101 from a first initial temperature to a second temperature greater than the first initial temperature during a spray deposition process. Accordingly, the substrate may expand due to thermal expansion. If this thermal expansion along a length of the substrate 101 was not accounted for, the substrate 101 would become slack and it would be difficult to maintain a desired position and/or orientation of the substrate 101 during a spray deposition process. Accordingly, it may be desirable to account for the expansion of the substrate 101 and maintain a predetermined tension in the substrate 101 within a portion of the substrate aligned with the one or more sprayers within the internal volume 104 of the spray chamber.

[00131] In one possible embodiment in which the desired spray deposited material layer is deposited in batches, the second clamp 116 may be configured to be clamped onto the substrate 101 at a location downstream from the one or more sprayers (e.g., downstream from the internal volume of the spray chamber). The second clamp 116 may be associated with a motion stage (e.g., one or more actuators configured to displace the second clamp in a downstream direction) that is configured to apply a force, such as a substantially constant force to the substrate 101 in a downstream direction during the spray deposition process. Corresponding, a first clamp 114, see Fig. 4B, located upstream from the second clamp 116 may apply a corresponding force in the upstream direction, and in some embodiments, may be held stationary. By applying these opposing forces to the substrate 101, a predetermined tensile force may be maintained in the

substrate during a spray deposition process. In instances in which the temperature of the substrate changes during a spray deposition process, the second clamp 116 may be displaced in the downstream direction during the spray deposition process to maintain the desired predetermined tensile force in the substrate. The amount of displacement may vary depending on the amount of thermal expansion the substrate undergoes, which may depend on what material the substrate is formed of as well as the temperature change the substrate is exposed to.

[00132] After a spray formation process has been completed, the first and second clamps 114 and 116 may be moved back to an unclamped configuration and the substrate 101 may be moved in a downstream direction to align an uncoated portion of the substrate 101 with the one or more sprayers. Correspondingly, the second clamp 116 may be moved back to an initial position along a length of the substrate. The clamping, spraying of the powder material, and maintenance of the desired tensile force in the substrate with the clamps may then be repeated any appropriate number of times at any appropriate frequency.

[00133] In the above embodiment, the second clamp 116 may be actuated to move between the clamped and unclamped configurations in a first direction 408 perpendicular to a path of travel of the substrate and in the upstream and downstream directions, see direction 410, using any appropriate actuator or combination of actuators as the disclosure is not so limited. For example, the second clamp 116 may be actuated in the first direction of movement and/or the second direction of movement using any appropriate combination of linear actuators such as hydraulic actuators, pneumatic actuators, solenoids, linear motors, any combination thereof, and/or any other appropriate types of actuator capable of providing the desired motions of the second clamp as the disclosure is not so limited.

[00134] In other embodiments, it may be desirable to maintain a predetermined tensile force in a substrate using a pair of calendaring rollers 118 disposed downstream from the internal volume 104 of the spray chamber to accommodate the thermal expansion along a length of the substrate 101. In such an embodiment, rotation of the calendaring rollers may be controlled based at least in part on a predetermined rotational torque of the calendaring rollers and/or a predetermined tensile force applied to the substrate. These parameters may be measured by integrated sensors within the calendaring rollers (e.g., a current sensor, torque sensor, force sensor) and/or sensors associated with the calendaring rollers may be used to indirectly sense the desired parameters. In either case, a motor associated with one or both of the calendaring rollers may be controlled based at least in part on the sensed torque, force, or other related parameter to maintain a predetermined tensile force in the substrate 101. Physically, this may correspond to the one or more motors applying a substantially constant

torque to the one or more calendaring rollers to draw the substrate through the one or more calendaring rollers. Additionally, a feed rate of the substrate 101 off of the feed reel 110 may be less than a feed rate of the substrate 101 through the calendaring rollers 118 and onto the collector reel 112 to accommodate for the length change of the substrate during the spray deposition process.

[00135] As also noted above, in some embodiments, it may be desirable to apply a substantially constant calendaring force or pressure to a spray deposited material layer disposed on the substrate 101. In such an embodiment, one or both calendaring rollers of a pair of calendaring rollers 118 may be associated with one or more actuators 118a (e.g., hydraulic actuators, pneumatic actuators, solenoids, linear motors, any combination thereof, and/or any other appropriate type of actuator). The one or more actuators may be configured to displace the one or more calendaring rollers of the pair of rollers in a direction that is substantially perpendicular to an associated surface of the substrate 101 disposed between the pair of calendaring rollers. Thus, the one or more actuators may be used to adjust a gap between the calendaring rollers the substrate is passed through. Correspondingly, a force or pressure applied to the spray deposited material layer may either be passively controlled by operating the one or more actuators to apply a substantially constant calendaring force or one or more force sensors (e.g., a load cell, strain sensor, pressure sensor associated with a hydraulic or pneumatic actuator, a current sensor associated with an electric actuator, or other appropriate type of sensor capable of directly or indirectly sensing a calendaring force applied to the substrate) may be used to sense a calendaring force applied to the substrate and actively control the actuators to adjust the size of the gap between the calendaring rollers to maintain a substantially constant calendaring force.

[00136] The controller 402 and power source 404 may be operatively coupled to the pair of calendaring rollers 118 and second clamp 116. The controller 402 may include one or more processors and associated non-transitory computer readable memory. The controller may be configured to control one or more operating parameters of the pair of calendaring rollers 118, second clamp 116, collector reel 112, and/or any other appropriate portion of the spray deposition system. In some embodiments, the controller 402 may be configured to obtain one or more sensed parameters associated with the spray deposition system 100 and may be configured to control one or more portions of the spray deposition system based at least in part on the sensed parameters as will be discussed further with regards to Fig. 14. The power source 404 may be configured to power (e.g., provide electrical power to) the pair of calendaring rollers 118 and second clamp 116. In some embodiments, the positive pressure of the second sealed volume

208 may be provided by one or more pumps, pressurized gas cylinders, or other appropriate source of pressurized gas. However, instances in which a negative pressure relative to the surrounding ambient atmosphere (e.g., using a pump or other vacuum source) is used within the second sealed volume 208 are also contemplated.

[00137] In some embodiments, a spray deposition system 100 may include a gas and material recycling system. In the embodiment depicted in Fig. 5, the material collector 128 includes two material collector outlets 130 coupled to the material collector 128 and in communication with the internal volume 104 of the spray chamber. However, it should be appreciated that one or any other appropriate number of outlets are contemplated as the disclosure is not limited in this respect. In some embodiments, the one or more material collector outlets 130 may be coupled to the material collector 128 and the gas and material recycling system may be configured to direct material and/or gas from the internal volume 104 through the material collector 128 and out the one or more material collector outlets 130. The one or more material collector outlets may be coupled to any appropriate tubing, piping, valves, or other appropriate couplings attached thereto. For example, in the depicted embodiment of Fig. 5, conduits 500 may be fluidly coupled to the one or more material collector outlets 130 and may be configured to transport gas and/or material being recycled in the spray deposition system 100 to a desired location as detailed further below.

[00138] The gas and material recycling system may be configured to direct material and gas inside the internal volume 104 to exit the internal volume for subsequent reuse in the process. Thus, the gas and/or uncoated material may be recycled within the overall process. For example, gas leaving the internal volume 104 may be directed to the sprayer 108 and may be sprayed back into the internal volume 104 for use in spraying material onto the substrate 110 and/or heating an atmosphere of the internal volume 104. The loose powder that is collected may either be collected for subsequent filtering and/or the filtering and reuse cycle may be implemented as part of the current operation of the system. The gas and material recycling system may include one or more pumps fluidly coupled to the conduits 500, material collector 128, and material collector outlets 130 and may be configured to apply a suction to draw the gas and/or loose powder out of the internal volume 104 into a gas and/or material recycling process detailed further below. In some embodiments, the gas and material recycling system may also include any appropriate number of separation steps, filters, and/or other appropriate components configured to form separate streams of a clean flow of gas substantially free of particulates and a separate powder stream.

[00139] A method 600 for spray depositing a material layer, such as an ionically conductive layer, is described herein according to some embodiments in regard to Figs. 6A-6B, with reference to Figs. 1-5. According to some embodiments, the method described in Figs. 6A-6B may preferably be implemented in a manufacturing process where a material layer is formed continuously. A substrate, which may be a foil (e.g., a metallic foil) as described herein, may be fed from a feed reel towards a spray chamber at a first feed rate, see 602. For example, in some embodiments, the substrate 101 may be fed from the feed reel 110 towards the sprayer 108 disposed in the internal volume 104 at a first feed rate. A first tension may be applied to a portion of the substrate proximate to the feed reel, see 604. In some embodiments, one or more of the feed reel 110, one or more rollers 111, and contact preheaters 103 may be configured to maintain the first tension in the portion of the substrate 101 proximate to the feed reel 110. At 606, the substrate may be preheated to a preheat temperature T_P prior to entering the spray chamber. In some embodiments, the contact preheaters 103 may be configured to preheat or at least help to preheat the substrate 101 to the preheat temperature T_P prior to the substrate entering the internal volume 104 of the spray chamber. One or more other heaters may be used in addition to or in place of the contact preheaters to heat the substrate to the preheat temperature T_P as the disclosure is not limited in this fashion. Optionally, one or more surfaces of the substrate may be plasma cleaned at 608. For example, as previously mentioned, one or more plasma generators 126 may be configured to direct plasma onto one or more surfaces of the substrate 101.

[00140] The substrate may optionally pass through an air curtain and/or one or more seals into the spray chamber, see 610. For example, the first sealed volume 202 and/or the internal volume 104 may include an air curtain generator configured to direct an air curtain (e.g., air or other appropriate atmosphere) towards an inlet of the internal volume 104. Further, the first sealed volume 202 and/or the internal volume 104 may include one or more seals that the substrate pass through and into the internal volume 104. At 612, a flow of gas for a spray deposition process may be preheated to a first temperature T_1. For example, in some embodiments, the gas preheater 122 may be configured to preheat the flow of gas moving through the sprayer 108 and/or spray nozzle 120 to the first temperature T_1 which may be less than a melting temperature of a binder of the powder to be sprayed. Optionally, a positive pressure of one or more surrounding atmospheres relative to a pressure of an internal atmosphere of the spray chamber may be maintained, see 614. For example, in some embodiments, one or both of the first sealed volume 202 and the second sealed volume 208 may be configured to have an atmosphere with a higher pressure than the atmosphere of the internal volume 104. At 616,

the substrate may be heated to a second temperature T_2 inside the spray chamber which may be greater than a melting temperature of a binder of the powder to be sprayed. For example, one or more heaters may be configured to heat the substrate 101 inside the internal volume 104, including any appropriate combination of conductive heaters, resistive heaters, convective heaters radiative heaters, combinations of the above, and/or any other appropriate heater.

[00141] At 618, a powder may be aerosolized with a flow of gas. For example, ionically conductive powder may be fed from a powder hopper into a flow channel of the sprayer 107 through which the flow of gas is flowing via venturi suction. Alternatively, other methods of aerosolizing the powder within the flow of gas may be used including, but not limited to, fluidized bed (e.g., directing pressurized fluid into the powder), pneumatic spray, and venturi (e.g., venturi vacuum using the venturi effect). In some embodiments, the atmosphere of the spray chamber may be heated to a third temperature T_3 which may be greater than a melting temperature of a binder of the powder to be sprayed, see 620. In some embodiments, the atmosphere of the spray chamber may be heated to the third temperature T_3 using the one or more gas heaters 122 as described herein. In some embodiments, the third temperature T_3 may be greater than the first temperature T_1 and may either be the same or different from the second temperature T_2. A layer of the powder may be sprayed on and bound to the heated substrate, see 622. For example, in some embodiments, the binder of the ionically conductive particles may melt during the spray deposition process causing the separate particles to bind to adjacent particles and/or the substrate. At 624, a second tension may be applied to a second portion of the substrate with a second feed rate to account for thermal expansion of the substrate and maintain a predetermined tensile force in the substrate. The second portion of the substrate may correspond to a portion of the substrate aligned with the one or more sprayers of the system. In some embodiments, one or more of the collection reel 112 and/or a pair of calendaring rollers 118 may be controlled to apply the desired the second feed rate and/or the associated second tension. The substrate may optionally be passed through an air curtain and/or one or more seals as the substrate exits the spray chamber, see 626. For example, the substrate may be passed through an air curtain 212 and/or one or more seals 204 as the substrate 101 exits the internal volume 104 of the spray chamber.

[00142] At 628, the layer of powder may optionally be calendared with the calendaring rollers using a constant calendaring force or pressure applied to the layer of spray deposited materials. For example, the substrate 101 may have one or more layers of spray deposited material disposed thereon which may include variations in thickness along a length of the substrate. The one or more layers of material disposed on the substrate may be calendared by

the pair of calendaring rollers 118. In some embodiments, the calendaring pressure and/or force applied to the substrate and material layer may be substantially constant. This may include controlling one or more actuators 118a to displace one or both calendaring rollers in a direction perpendicular to a surface of the substrate to vary a thickness of a gap between the calendaring rollers. Thus, the one or more actuators may be operated to maintain the substantially constant calendaring pressure or force by varying the thickness of the gap between the calendaring rollers.

[00143] Gas and/or sprayed powder may optionally be flowed out of and filtered from the spray chamber, see 630. For example, in some embodiments the spray deposition system 100 may include a material and gas recycling system configured to direct gas and/or material out of the internal volume 104. The material and gas recycling system may include one or more filters configured to filter the gas and/or material (e.g., sprayed powder) into separate streams of clean substantially particular free gas and sprayed powder. The filtered gas may then optionally be used for heating the spray chamber atmosphere, for the spray deposition process, and/or other appropriate application at 632. Correspondingly, the sprayed powder may either be filtered and reused during a continuous process and/or it may be stored in a container for subsequent processing and reuse at 632. For example, the gas and material recycling system may be configured to direct the filtered gas to one or both of the gas preheater 122 coupled to the internal volume 104 and the sprayer 108. Finally, at 634, the coated substrate may be wound onto the collection reel with a third tension applied to a portion of the substrate that may be disposed between the calendaring rollers and the collection reel. In some embodiments, the collection reel 112 may determine the third tension. For example, the collection reel 112 may be rotated faster or slower relative to the calendaring rollers to increase or decrease the third tension, respectively.

[00144] Another method 700 for spray depositing a material layer, such as an ionically conductive layer, is described herein according to some embodiments in regard to Figs. 7A-7B, with reference to Figs. 1-5. According to some embodiments, the method described in Figs. 7A-7B may preferably be implemented in a manufacturing process where a first portion of a material layer is formed and then a second portion of a material layer is formed in a semi-continuous process or batch process. The process may be somewhat similar to that described above with regards to Figs. 6A-6B. To begin, a substrate, which may be a foil (e.g., metallic foil) as described herein, may be fed from a feed reel towards a spray chamber, see 702. In some embodiments, the substrate 101 may be fed from the feed reel 110 towards the sprayer 108 disposed in the internal volume 104. For example, the feed reel 110 may be configured to rotate

to unwind the substrate 101 and move the substrate toward the sprayer 108. A first tension may again be applied to a first portion of the substrate proximate to the feed reel at 704. As previously discussed, the feed reel 110, one or more rollers 111 and/or the contact preheaters 103 may be configured to apply and/or maintain the first tension in the substrate. At 706, the substrate may be preheated to a preheat temperature T_P prior to entering the spray chamber.

[00145] At 708, one or more surfaces of the substrate may optionally be plasma cleaned as detailed previously above. The substrate may then optionally pass through an air curtain and/or one or more seals into the spray chamber, see 710. However, unlike the embodiment of Figs. 6A-6B, in the current embodiment, at 712, once appropriately positioned within the spray chamber the substrate may be clamped with a first clamp upstream from a spray location of the one or more sprayers located along a length of the substrate and a second clamp located downstream from the spray location. In some embodiments, the substrate 101 may be clamped with the first clamp 114 and the second clamp 116 as described previously above. At 714, a flow of gas for a spray deposition process may be preheated to a first temperature T_1 and a positive pressure of one or more surrounding atmospheres relative to a pressure of an internal atmosphere of the spray chamber may optionally be maintained at 716 as detailed above. At 717, the substrate may be heated to a second temperature T_2 inside the spray chamber and a powder may be aerosolized with the preheated flow of gas at 718 as also detailed above. The atmosphere of the spray chamber may again be heated to a third temperature T_3, see 720. A layer of the powder may then be deposited on and bound to the heated substrate, see 722.

[00146] As noted previously, in some embodiments, the clamps of a spray deposition system may be used to control tension in a second portion of the substrate disposed within the interior volume of a spray chamber during a spray deposition process to accommodate for length changes of the substrate associated with thermal expansion. Thus, at 724, the second clamp may be displaced in a downstream direction while the first clamp and the second clamp are clamped to the substrate to apply a second substantially constant tension to the second portion of the substrate to account for thermal expansion of the substrate and maintain tautness in the substrate. In some embodiments, the second portion of the substrate may be disposed between the first clamp 114 and the second clamp 116 such that the second portion of the substrate is disposed downstream from the first clamp and upstream from the second clamp.

[00147] The substrate may again be optionally passed through an air curtain and/or one or more seals as the substrate exits the spray chamber, see 726, prior to being calendared with the calendaring rollers using a substantially constant calendaring pressure and/or force applied to the spray deposited layer of material at 728. Gas and/or sprayed powder may optionally be filtered

into separate streams at 730 prior to optionally being reused, see 732. Finally, at 734, the coated substrate may be wound onto the collection reel with a third tension applied to a portion of the substrate that may be disposed between the calendaring rollers and the collection reel. Alternatively, the portion of the substrate including one or more calendared layers of material disposed thereon may be cut off of the upstream portion of the substrate for subsequent use in any appropriate manufacturing process.

[00148] One embodiment of a sprayer is described relative to Fig. 8. The depicted sprayer 800 may be used with any of the spray deposition systems and/or methods disclosed herein. It should be appreciated that the sprayer 108 as referred to in previous discussions may be interchangeable with the sprayer 800, and vice-versa. The sprayer 800 may be coupled to a pressurized gas source 802 (the air source is not shown in Fig. 8, and rather a potential embodiment of a coupling to a gas source is depicted and labeled as 802) which may be fluidly coupled to a nozzle 806 of the sprayer. The gas source 802 may provide a flow of gas (e.g., pressurized gas) to the nozzle 806 for spraying the material, such as ionically conductive powder, towards the substrate. In some embodiments, the gas from the gas source 806 may propel particles entrained within the flow of gas along a flow path coupled to the nozzle 806 in a direction towards the substrate. As one of ordinary skill in the art would appreciate, the particles may be sprayed towards the substrate faster or slower by increasing or decreasing the pressure of the gas traveling through the flow path fluidly coupled to the nozzle respectively. In some embodiments, the nozzle 806 may be configured to spray the material onto the substrate in a desired geometry or pattern. For example the nozzle 806 may be configured to spray material in a circular geometry, rectangular geometry, or any other appropriate geometry or pattern.

[00149] The sprayer 800 may include a gas preheater 804 fluidly coupled to the nozzle 806 and the gas source 802. A flow of gas from the gas source 802 may be heated by the gas preheater 804 and the heated flow of gas may be directed through the nozzle 806. As the heated flow of gas travels through the sprayer 800, the heated flow of gas may entrain and heat the material (e.g., ionically conductive powder/particles) within the flow of gas as the material moves through the sprayer. As such, the gas preheater 804 may be configured to preheat a flow of gas and material entrained therein that is being sprayed from the sprayer 800. It should be appreciated that the gas preheater depicted in Fig. 8 is merely one embodiment of a gas preheater and any appropriate heater or combination of heaters as described herein may be used to heat the flow of gas and material being sprayed from the sprayer 800.

[00150] As previously introduced, the sprayer 800 as described herein may be moveable in one or more directions, though embodiments in which the one or more sprayers of a system are

fixedly mounted to and extend through one or more corresponding pass through seals of a spray chamber housing are also contemplated. In some embodiments, the sprayer 800 (e.g., nozzle of the sprayer) may be moveable in three directions. In the depicted embodiment of Fig. 8, the sprayer is moveable in a first direction parallel to a longitudinal axis of the nozzle 806, a second direction transverse to the longitudinal axis of the nozzle 806, and a third direction parallel to a vertical axis (which may be perpendicular to the first and second directions) of the nozzle 806. The three directions of movement may enable to the sprayer 800 to be positioned proximate to any appropriate portion of a substrate and at appropriate distance from the substrate 101. Further, in some applications, such an embodiment of a sprayer may be used to move the sprayer during a spraying process, though the sprayer may also be held stationary during the spraying process. The depicted three degrees of freedom may be provided by one or more associated motion stages as detailed further below. Turning to Fig. 1, the three directions of movement will be described in context with the other portions of the spray deposition system 100. Moving the sprayer in the first direction may adjust the proximity of the nozzle relative to the substrate 101, and in some embodiments the first direction may describe movement towards or away from the substrate 101. Moving the sprayer in the second direction may move the sprayer in a direction parallel to the downstream direction and accordingly may change a position of the sprayer relative to a length of the substrate. Moving the sprayer in the third direction may change what portion of the substrate 101 is sprayed in a direction parallel to the width of the substrate 101 and perpendicular to a length of the substrate. It is also contemplated that a sprayer may be rotatable about any appropriate axis, including the aforementioned axes and directions, to change the angle at which the material is sprayed from the sprayer and onto an associated substrate.

[00151] The above noted degrees of freedom of movement of the sprayer 800 may be provided by any appropriate type of combination of movement stages. This may include the use of appropriate mechanical, electrical, and/or electromechanical actuators. For example, the sprayer 800 may be moveable in the first, second, and third directions using one or more actuators 822 configured to move the sprayer along a desired axis of motion. In the depicted embodiment of Fig. 8, the sprayer is coupled to a telescoping actuator which may be configured to move in the first direction. The sprayer 800 may be moveable in the second and third directions using other appropriate types of actuators including telescoping actuators, motors associated with appropriate transmissions, rails and/or linear bearings used in combination with a linear actuator, and/or any other appropriate type of actuator capable of providing the various desired types of motion of the sprayer 806. It should also be appreciated that the one or more

actuators 822 and any other component configured to move the sprayer 800 may be at least partially controlled using any of the controllers described herein relative to the various spray deposition systems. The sprayer 800 may also include a support 808 which may be fixed in position. The moveable secondary support 810 on which one or more of the movement stages (e.g., the depicted actuators 822) may be disposed and another movement stage may be configured to move the moveable secondary support 810 relative to the stationary support 808.

[00152] One embodiment of a gas preheater as referred to herein is described in greater detail in regard to Figs. 9-12. It should also be understood that the gas preheater 122 as previously described may be used interchangeably with the gas preheater 900 depicted in Fig. 9. The gas preheater 900 may include an inlet 902 configured to be coupled to a gas source, not depicted. A flow of gas G may be received from the gas source which may flow into the inlet 902. The inlet 902 may be fluidly coupled to a first manifold 904, and the inlet 902 may be configured to direct the flow of gas G into the first manifold 904. The first manifold 904 may be fluidly coupled to one or more tubes 906 and the first manifold 904 may be configured to direct the flow of gas through the one or more tubes 906. In the depicted embodiment, the manifold directs the flow of gas into a plurality of tubes 906. The first manifold 904 may be coupled to the one or more tubes 906 at an upstream portion of the one or more tubes. The one or more tubes 906 may be thermally conductive. A heating band 908, or other type of heater, may be thermally coupled to the one or more tubes 906. In the depicted embodiment, the heating band is clamped onto an exterior facing surface of the tubes, and may extend at least partially, or completely, around a perimeter of an associated portion of the preheater 900. The flow of gas flowing through the one or more tubes 906 may be heated by the heating band 908, or other heater, due to conduction through the tubes to the flow of gas passing through the tubes. A second manifold 910 may be coupled to the one or more tubes 906 and the second manifold 910 may be configured to receive the flow of gas from the one or more tubes 906. The second manifold 910 may be coupled to the one or more tubes 906 at a downstream portion of the one or more tubes 906. The manifold may include an outlet 912 fluidly coupled to plurality of tubes 906 through an interior volume of the second manifold 910. Thus, the now heated flow of gas from out of the second manifold 910 through the outlet 912. In embodiments where the gas preheater is fluidly coupled to the sprayer, the outlet 912 may be configured to direct the flow of gas (which may be heated by the gas preheater) to the sprayer and/or nozzle. In embodiments where the gas preheater is fluidly coupled to the internal volume 104 of a spray chamber, the outlet 912 may be configured to direct the flow of gas (which may be heated by the gas preheater) into the internal volume 104.

[00153] While the depicted embodiments of the gas preheater 900 show one grouping of tubes between two manifolds, any appropriate number and/or arrangement of tubes and/or manifolds may be used as the disclosure is not so limited. For example, the gas preheater 900 may include a second grouping of one or tubes fluidly coupled to the second manifold 910, and the second manifold may be configured to direct the flow of gas to the second grouping of one or more tubes. The second grouping of tubes may be thermally coupled to a second heating band configured to heat the second grouping of tubes prior to flowing to a separate manifold and outlet. The one or more tubes 900 as depicted in the figures are configured as straight tubes, however, the one or more tubes may be formed in any appropriate geometry which may include coils, curves, turns, or any other appropriate non-linear shape or configuration. The one or more tubes may be formed with any appropriate inner diameter and length for a desired volumetric flow rate and heat transfer to the gas flowing therethrough during operation as the disclosure is not so limited.

[00154] In some embodiments, the inner transverse cross sectional dimension (e.g., a diameter or width), of the one or more tubes of the gas preheater may be less than or equal to approximately 5 mm, 4 mm, 3 mm, 2 mm, 1 mm, and/or any other appropriate inner transverse cross sectional dimension. The inner transverse cross sectional dimension of the one or more tubes of the gas preheater may also be greater than or equal to 0.5 mm, 1 mm, 2 mm, 3 mm, and/or any other appropriate diameter. Combinations of the foregoing, including inner transverse cross sectional dimensions between or equal to 0.5 mm and 5 mm are also contemplated, as well as inner transverse cross sectional dimensions greater than and less than the ranges listed above, as the present disclosure is not limited by the inner transverse cross sectional dimension of the one or more tubes of the gas preheater. Please provide a range for the inner diameter of the tubes.

[00155] In some embodiments, the length of the one or more tubes of the gas preheater may be less than or equal to approximately 500 mm, 400 mm, 300 mm, 200 mm, 100 mm, and/or any other appropriate length. The length of the one or more tubes of the gas preheater may also be greater than or equal to 100 mm, 200 mm, 300 mm, 400 mm, and/or any other appropriate length. Combinations of the foregoing, including lengths between or equal to 100 mm and 500 mm are also contemplated, as well as lengths greater than and less than the ranges listed above, as the present disclosure is not limited by the length of the one or more tubes of the gas preheater.

[00156] The gas preheater 900 may optionally include a central support 914 that may be coupled to the one or more tubes 906. The central support may be easily seen in the cross-

sectional depiction of the gas preheater 900 as shown in Fig. 12. The central support 914 may be configured to provide structural support to the one or more tubes 906. For example, the central support 914 may be configured to stabilize the one or more tubes 906 disposed against an external surface of the central support. The central support may provide a rigid structure the tubes may be clamped against to help place a heater in thermal contact with the tubes as well as helping to limit any deflection of the tubes during operation. In some embodiments, the central support 914 may include one or more grooves (e.g., channels) which may be sized and shaped to complement a corresponding profile of a portion of the of the one or more tubes 906. The grooves may also extend along at least a portion of, and preferably an entire, length of the central support extending between the two opposing manifolds. For example, the one or more grooves may include a curved surface approximately corresponding to the radius of curvature of the one or more tubes 906 and each groove may be configured to receive a corresponding tube of the one or more tubes 906 disposed therein along its length. In some embodiments, a cross section of each channel of the plurality of channels may substantially conforms to a portion of a cross section of a corresponding tube of the plurality of tubes. This may help to increase an area of the tubes that is supported by and in contact with the central support. In some embodiments, the first manifold 904 and the second manifold 910 may be formed in caps disposed on opposing end portions of the central support 914.

[00157] The heating band 908 may include one or more pairs of power terminals 909 configured to be connected to an associated allow a current to be passed through the heating band to resistively heat the heating band 908. Accordingly, the heating band 908 may be configured to conductively heat the one or more tubes 906 by conducting the generated heat to the one or more tubes it is clamped against. The heat transmitted to the tubes may then be transferred to the one or more flows of gas traveling within each of the tubes to heat the overall gas flow to a desired temperature. While in the depicted embodiments of Figs. 9-11 the heating band 908 is disposed against an exterior of the one or more tubes 906, the disclosure is not limited in this fashion and the heating band 908 may optionally be disposed against an interior surface of the one or more tubes 906. Additionally, different types of heaters other than the depicted resistively heated heating band may be used as the disclosure is not limited to any particular type of heater used to transfer heat to the one or more tubes and gas flowing therethrough.

[00158] The plurality of tubes 906 may be distributed around an outer perimeter of the gas preheater 900, and in some embodiments, may be distributed in a concentric pattern around the outer perimeter of the preheater as depicted in Fig. 9-12. Other arrangements of the plurality

of tubes 906, including non-concentric arrangements of the tubes around the perimeter of a preheater, are contemplated as the disclosure is not limited by the arrangement of the tubes. Further, while the gas preheater 900 is shown as having 10 tubes in Figs. 9-12, any appropriate number of tubes may be used as the disclosure is not limited in this fashion.

[00159] Fig. 11 shows a cross-sectional view of the gas preheater 900 with further depictions of the flow of the gas G flowing through the preheater according to some embodiments. As discussed previously, the flow of gas G may enter the gas preheater 900 via the inlet 902 and into an internal volume of the first manifold 904. The flow of gas G may be directed from the internal volume of the manifold into one or more corresponding manifold outlets fluidly coupled to the one or more tubes 906 as indicated by the plurality of arrows within the first manifold 904 extending into the corresponding plurality of tubes in Fig. 11. The flow of gas G may travel through the first manifold 904 into the one or more tubes 906 via the corresponding manifold outlets. The flow of gas G may travel through the one or more tubes 906 (not depicted by arrows) and past the heating band 908, or other heater. As previously discussed, the heating band 908, or other heater, may be in thermal contact with the one or more tubes 906 such that the heater may heat the flow of gas G traveling through the one or more tubes 906. The flow of gas G may flow through the one or more tubes 906 to the second manifold 910 through one or more corresponding manifold inlets of the second manifold fluidly coupled to the one or more tubes 906. The flow of gas G may flow into an interior volume of the second manifold prior to flowing through an outlet 912 of the second manifold as depicted by the arrows shown in Fig. 11. It should be understood that the arrows shown in Fig. 11 are merely simplified visual representations of the general flow paths along which the flow of gas G may travel through the gas preheater 900, and do not represent each and every direction in which the flow of gas G may move while the flow of gas G moves through the gas preheater. In the above embodiment, the one or more tubes may be fluidly coupled to the manifolds using any appropriate type of connection including, but not limited to, welds, brazing, compression seals, threaded fittings, and/or any other appropriate type of fluid tight connection.

[00160] A schematic representation of a spray deposition system 1300 including a gas preheater 1304 for use with the systems and methods described herein is shown in Fig. 13. The spray deposition system 1300 may include a gas preheater 1304 (which may be interchangeable with any of the gas preheaters as described herein) configured to heat a flow of gas and direct the heated flow of gas to a sprayer 1306 (which may be interchangeable with any of the sprayers as described herein). A powder hopper 1302 may be configured to direct a powder, such as ionically conductive powder, towards a flow path extending between the preheater 1304 and an

outlet of the sprayer 1306. In some embodiments, the flow of gas through the depicted flow path between the preheater and the sprayer may draw the powder into the flow path and entrain it in the flow of gas due to venturi suction of the flow of gas through the indicated flow path the powder hopper is connected to. In some embodiments, the powder hopper is a gravity fed hopper. However, it should be understood that other systems and methods for suppling the powder and entraining it in a flow of gas may be used as the disclosure is note limited in this fashion. In the depicted embodiment of Fig. 13, the sprayer 1306 is disposed in a spray chamber 1308 (which may be used interchangeably with the internal volume as described herein), although the sprayer 1306 may be disposed partially inside, partially outside, entirely inside, or entirely outside of the spraying volume as the disclosure is not limited in this fashion.

[00161] The one or more sprayers 1306 may be configured to spray the entrained powder onto a substrate 1310 (which may be interchangeable with any of the substrates described herein) to form a material layer 1311 disposed thereon. In the depicted embodiment of Fig. 13, material being sprayed is represented by the three arrows emanating from the sprayer 1306 towards the substrate. In some embodiments, the sprayer 1306 may be configured to aerosolize the material powder from the powder hopper 1302 using the heated flow of gas from the gas preheater 1304. As such, the material particles being sprayed may be heated to a temperature that is less than a melting temperature of a binder of the powder and above an ambient temperature of the surrounding environment.

[00162] A portion of the gas within the spraying volume 1308 may be directed out of the spraying volume 1308 and to the sprayer 1306 to help preheat the powder prior to spraying using a preheated flow of gas as described above. In this way, the gas may be reused (e.g., recycled) without the need to use new gas and without the need to heat the gas from ambient temperature to a desired temperature. This recycled gas then be sprayed out of the sprayer 1306 back into the internal volume of the spray chamber 1308 to form a spray of the powder directed towards the substrate 1310 to form the material layer 1311. In some embodiments, this recycled gas is flowed from an outlet of the spray chamber 1308 to the gas preheater 1304 to be heated to a desired temperature prior to being directed to the sprayer 1306 by the gas preheater. The desired flow of gas may be induced by a suction applied to the outlet of the spray chamber the flow path is connected to. For example, a pump 1314 may be disposed along the flow path extending between the outlet of the spray chamber and the preheater to pump the gas through the indicated flow path. To avoid the introduction of particles and associated binder into the preheater, which may melt within the preheater, it may be desirable to filter the flow of gas

using one or more filters 1312 disposed along the flow path and upstream from the preheater 1304.

[00163] In some embodiments, the sprayed material that does not adhere to the substrate may also be reused. In some embodiments, sprayed powder which did not bind to the substrate 1310 may be directed out of the spray chamber through an associated outlet formed in the spray chamber 1308. In some instances, the unbound powder may be collected in a volume that is located vertically below the substrate within the spray chamber such that the powder may fall into a collection volume (not depicted). This collection volume may then be subsequently processed to recover the unbound powder still meeting the desired properties for use in the spray deposition process. Alternatively, in some embodiments, the powder may be filtered for a desired size threshold using one or more filters prior to being transported back to the hopper 1302 using a flow of gas, not depicted. In either case, a separate flow of substantially particle free gas may flow through the depicted filter 1312 along the flow path connected to the preheater 1304.

[00164] The gas preheating system 1300 may also include a controller 1318, including one or more processors, operatively coupled to any appropriate component of the depicted spray deposition system 1300. In the depicted embodiment of Fig. 13, the controller 1318 is operatively coupled to the gas preheater 1304, pump 1314, and a temperature sensor 1316 disposed along a flow path of the gas between the preheater and sprayer 1306. In some embodiments, the controller 1318 may use proportional integral derivative (PID) control to control the gas preheater 1304, although the controller 1318 may use any appropriate control method, including other types of control loops, to maintain a desired temperature of the gas flow flowing out of the preheater as the disclosure is not limited in this fashion. The controller 1318 may be configured to control operation of the pump 1314 to cause the gas to flow out of an outlet of the spray chamber 1308 to the gas preheater 1304 and back into the spray chamber via an outlet of the sprayer 1306. The temperature sensor 1316 may be configured to sense a temperature associated with the heated flow of gas from the gas preheater 1304. In some embodiments, including the depicted embodiment of Fig. 13, one or more temperature sensors 1316 may be disposed downstream from the gas preheater 1304. The controller 1318 may be configured to receive signals from the one or more temperature sensors related to the sensed temperatures. The controller 1318 may be configured to control the gas preheater 1304 based at least in part on the one or more sensed temperatures. For example, the controller 1318 may be configured to control the gas preheater to increase or decrease an amount of generated heat to control a temperature of the gas flowing out of the preheater.

[00165] Different types and positioning of sensors configured to sense a variety of parameters associated with the operation of a spray deposition system as described herein are depicted in Fig. 14. For example, this may include sensing parameters such as pressures, temperatures, distances, angles, torques, forces, flow rates, electrical currents, and/or other appropriate parameters. A schematic representation of a spray deposition system 1400 according to some embodiments is shown in Fig. 14 including an example arrangement of sensors for use in the spray deposition system 1400. It should be understood that the spray deposition system 1400 may be interchangeable with any spray deposition system described herein, and that the configurations of sensors described herein may be used with any of the systems and methods as disclosed herein. Further, portions of the spray deposition system 1400 depicted by Fig. 14 may be interchangeable with the corresponding portions of any of the spray deposition systems described herein. Further, any individual sensors that will be described in regard to Fig. 14 may be replaced with a plurality of sensors with any appropriate configuration and the resulting signals may be appropriately processed to determine the desired operating parameters associated with a particular component or operation of the spray deposition system.

[00166] A feed reel 1402 may include one or more of a torque, current, and/or position sensor 1424 configured to sense a torque, current, and/or position of the feed reel 1402, where the feed reel 1402 may be configured to unwind to move a substrate 1401 through the spray deposition system 1400. The substrate may move from the feed reel 1402 through a seal 1403 into a first sealed volume 1405. The first sealed volume 1405 is indicated in Fig. 14 with a box formed with dotted lines. Contact preheaters 1406 optionally may be disposed in the first sealed volume 1405. A temperature sensor 1425 may be configured to sense a temperature associated with the contact preheaters 1406 and/or a portion of the substrate proximate to the contact preheaters 1406. A first clamp 1408 may be disposed downstream from the contact preheaters 1406. A temperature sensor 1426 may be configured to sense a temperature associated with the first clamp and/or a portion of the substrate proximate to the first clamp 1408. A pressure sensor 1428 may be configured to sense a pressure of an atmosphere withing the first sealed volume 1405. A temperature sensor 1430 may be configured to sense a temperature of the first sealed volume 1405. The substrate may move from the first sealed volume 1405 to an internal volume 1411 of a spray chamber, optionally through a seal 1410. The internal volume 1411 of the spray chamber is indicated in Fig. 14 by a box formed with dashed lines.

[00167] A pressure sensor 1432 may be configured to sense a pressure of an atmosphere within the internal volume 1411 of the spray chamber. A temperature sensor 1434 may be configured to sense a temperature of the atmosphere withing the internal volume 1411. One or

more heaters 1413 may be disposed within the internal volume 1411 and may be configured to heat the substrate 1401. One or more temperature sensors 1437 may be configured to sense a temperature of the heaters 1413 in the instance the heater is in contact with the substrate and/or one or more portions of the substrate proximate to heaters 1413.

[00168] A sprayer 1412 may be configured to spray material onto the substate 1401 to form a material layer as described herein. In the depicted embodiment of Fig. 14, the sprayer 1412 is disposed outside of the internal volume 1411, however as previously discussed, the sprayer 1412 may be disposed partially inside, partially outside, and/or entirely inside the internal volume 1411 as the disclosure is not so limited. A temperature sensor 1436 may be configured to sense a temperature of a flow of gas flowing through the sprayer 1412. A pressure and/or flow rate sensor 1435 may be configured to sense a pressure and/or flow rate of a gas flowing through the sprayer 1412. A temperature sensor 1438 may be configured to sense a temperature associated with at least a portion of the substrate disposed downstream from the sprayer 1412. In some embodiments, the temperature sensor 1438 preferably may be configured to sense the temperature of the substrate, or a layer of spray deposited material disposed thereon, without contacting the substrate. For example, the temperature sensor 1438 may be an infrared (IR) temperature sensor, pyrometer, or other appropriate non-contact temperature sensor as indicated by the dashed-dotted line emanating from the temperature sensor 1438.

[00169] A gas preheater 1415 may be configured to direct heated gas into the internal volume 1411 as described herein. A temperature sensor 1440 may be configured to sense a temperature associated with a flow of gas from the gas preheater 1415 and directed into the internal volume. The temperature sensor 1440 may be disposed within the flow of gas (e.g., inline sensor) or outside of the flow of gas (e.g., out of line) according to some embodiments. Multiple temperature sensors may be configured to sense the temperature associated with any flow of gas discussed herein as the disclosure is not so limited. For example, one or more temperature sensors may be disposed in the flow of gas and may configured to sense the temperature of the flow of gas and one or more temperature sensors may be disposed outside of the flow of gas and may be configured to measure the temperature of a general atmosphere associated the flow of gas. An optional temperature sensor 1442 may be configured to sense a temperature associated with the gas preheater 1415. For example, the temperature sensor 1442 may be configured to sense a temperature associated with the one or more tubes, first manifold, second manifold, heating band, interior support, and/or any other appropriate portion of the gas preheater as described herein.

[00170] The substrate 1401 may move from the internal volume 1411 to a second sealed volume 1417, optionally through a seal 1414. The second sealed volume 1417 is indicated in Fig. 14 with a box formed of dotted lines. Optionally, air curtain generators (not shown in Fig. 14) may be disposed at positions proximate to and may direct a flow of gas towards the one or more associated seals shown in Fig. 14. One or more flow and/or pressure sensors may be configured to sense a pressure and/or flow rate associated with the one or more air curtains. The seals 1403, 1410, 1414, and 1423 are indicated in Fig. 14 with ovals formed by dashed lines. A pressure sensor 1450 may be configured to sense a pressure associated with an atmosphere of the internal volume 1411. A temperature sensor 1452 may be configured to sense a temperature associated with the atmosphere of the internal volume 1411. A second clamp 1416 may be disposed in the second sealed volume 1417 according to some embodiments. A temperature sensor 1444 may be configured to sense a temperature associated with the second clamp 1416 and/or a portion of the substrate proximate to the second clamp 1416.

[00171] A pair of calendaring rollers 1418 configured to calendar the substrate and any material deposited thereon may be disposed within the second sealed volume 1417 according to some embodiments. The pair of calendaring rollers 1418 may include a first calendaring roller 1420 and a second calendaring roller 1422. A temperature sensor 1446 may be configured to sense a temperature associated with one or both of the first calendaring roller 1420 and the second calendaring roller 1422. A force sensor 1448 may be configured to sense a force (e.g., a calendaring force applied to the substrate) associated with one or both of the first calendaring roller 1420 and the second calendaring roller 1422. The calendaring rollers may also be associated with one or more torque, position, and/or current sensors, not depicted, in some embodiments. The substrate may move to a collection reel 1404 from the second sealed volume 1417, optionally through a seal 1423, according to some embodiments. A torque, position, and/or current sensor 1454 may be configured to sense a torque, position, and/or current associated with operation of the collection reel 1454.

[00172] A controller 1456, which may be a single controller of a plurality of controllers, including one or more processors, may be configured to obtain sensed parameters sensed by the sensors shown and described in regard to Fig. 14. The controller may also be configured to control any appropriate portion of the spray deposition system 1400 based at least in part on the sensed parameters. For example, each component shown within the bounds of the controller area 1458, indicated by the box formed by dashed lines, may be configured to be controlled, at least in part, by the controller 1456. For example, the controller 1456 may be configured to control one or more portions of the spray deposition system 1400 to adjust a pressure, force, torque,

current, heat, temperature, distance, flow, velocity and/or any other appropriate parameter based at least in part on the sensed parameters obtained by the controller 1456 from the different sensors described above.

[00173] The systems and methods as described herein may include calendaring the material layer deposited on the substrate. Calendaring the material layer may involve passing the substrate with the material layer deposited thereon through calendaring rollers configured to apply a calendaring force to the material layer. Calendaring the material layer may provide the benefits previously described, including sufficient densification of the material layer and beneficial associated material properties such as improved conduction. For example, a pair of calendaring rollers 1500 may be configured to apply a calendaring force to the material layer. The calendaring force may be related to a calendaring pressure by the area of the calendaring rollers in contact with a spray deposited material layer during calendaring and these terms may be used interchangeably with one another in this disclosure as maintaining a predetermined calendaring force may corresponding to also maintaining a predetermined calendaring pressure. In either case, the calendaring rollers 1500 may be configured to apply a substantially constant calendaring force to the spray deposited material layer and underlying substrate according to some embodiments. It should also be understood that the depicted pair of calendaring rollers 1500 may be interchangeable with any of the calendaring rollers described herein.

[00174] The calendaring rollers 1500 may include a first calendaring roller 1502 and a second calendaring roller 1504, either one or both of which may be configured to control the calendaring force applied to the material layer. The calendaring force may be sensed by one or more force sensors 1512 configured to sense the applied calendaring force or other parameter related to the applied calendaring force (e.g., a current, pressure, force, strain, or other parameter that may be related to the applied calendaring force). The first calendaring roller 1502 and the second calendaring roller 1504 may be configured to rotate to move the substrate and material layer therethrough. Either one or both of the first calendaring roller 1502 and the second calendaring roller 1504 may be rotated by an operatively coupled motor 1508 according to some embodiments. Toque and/or current sensors 1510 may be configured to sense a torque, current, or other related parameter associated with rotation of the calendaring motors and corresponding operation of the motors 1508.

[00175] In some embodiments, the pair of calendaring rollers 1500 may be heated. For example, in the depicted embodiment of Fig. 15, the first calendaring roller 1502 and the second calendaring roller 1504 may be heated by one or more heaters 1506 configured to heat the first calendaring roller 1502 and/or the second calendaring roller 1504. In some embodiments, the

one or more heaters 1506 may be cartridge heaters configured to heat the corresponding calendaring roller each cartridge heater is installed in. One or more temperature sensors 1514 may be configured to measure temperatures associated with the one or more heaters 1506. The one or more temperature sensors 1514 may be configured to sense temperatures associated with any appropriate portion of the pair of calendaring rollers 1500, including an exterior portion of the first calendaring roller 1502 and/or the second calendaring roller 1504 that is configured to contact the substrate and one or more spray deposited material layers disposed thereon.

[00176] One or both of the first calendaring roller 1502 and the second calendaring roller 1504 may be configured to move in a direction that is perpendicular to a surface of a substrate disposed between the calendaring rollers 1502 and 1504 during operation. Accordingly, a gap between the pair of calendaring rollers 1500 may be varied to maintain a substantially constant calendaring force. Any appropriate actuator may be used to move one or both of the first calendaring roller 1502 and the second calendaring roller 1504 to provide the desired substantially constant calendaring force as described previously above.

[00177] A controller 1516, including one or more processors, may be configured to control any appropriate portion of the pair of calendaring rollers 1500. For example, any portion of the pair of calendaring rollers 1500 disposed within the controller area 1518, indicated by the box formed by dashed lines, may be controlled by the controller 1516. The controller 1516 may be configured to obtain sensed parameters from the sensors depicted in Fig. 15. For example, the controller 1516 may be configured to obtain sensed torques, currents, positions, temperatures, forces, and any other appropriate sensed parameter associated with the pair of calendaring rollers 1500. The controller 1516 may be configured to control any appropriate portion of the pair of calendaring rollers 1500 based at least in part on one or more the above noted sensed parameters associated with a specific operation or portion of the calendaring rollers. In some embodiments, the one or more actuators configured to move one or both of the first calendaring roller 1502 and second calendaring roller 1504 may be controlled with the controller 1516 based at least in part on the sensed calendaring force or other parameter related to the calendaring force. In some embodiments, the one or more heaters 1506 may be configured to be controlled with the controller 1516 based at least in part on the sensed temperature of the calendaring rollers. In some embodiments, the one or more motors 1508 may be configured to be controlled with the controller 1516 based at least in part on the sensed torques, currents, and/or positions.

[00178] FIG. 16 shows a schematic representation of an ionically conductive particle (i.e., a pre-coated particle), according to certain embodiments. A non-limiting representation of a cross-sectional view of ionically conductive particle 1610 is depicted. The particle includes a

continuous phase 1615 comprising an ionically conductive salt dissolved in a thermoplastic polymer, and optionally a plurality of inorganic solid particles (e.g., ceramic and/or glass particles) 1620 and/or electroactive material particles 1625 dispersed in and/or at least partially, and in some instances entirely, encapsulated by the continuous phase. As shown, the plurality of inorganic solid particles 1620 and/or electroactive material particles 1625 may be uniformly dispersed in the thermoplastic polymer. However, instances in which two or more particles form an agglomeration within the continuous thermoplastic phase are also contemplated. In some cases, at least one or more of the plurality of dispersed inorganic solid particles and/or electroactive material particles may be at least partially embedded in the ionically conductive polymer. For instance, as shown in FIG. 16, while a majority of the electroactive material particles 1625 are completely embedded in an inner volume of ionically conductive particle 1610, electroactive material particle 1625A is only partially embedded, e.g., as shown by a partial protrusion of particle 1625A out of thermoplastic polymer 1615.

[00179] It should be noted that other combinations of components and arrangements may be possible within the ionically conductive particle. For instance, in one specific set of embodiments, the ionically conductive particle comprises ionically conductive salt, inorganic solid particles, thermoplastic polymer, and an optional additive such as a plasticizer. In another specific set of embodiments, the ionically conductive particle comprises electroactive material particles, inorganic solid particles (e.g., ceramic and/or glass particles), thermoplastic polymer, a plasticizer, and optionally an ionically conductive salt. Additionally, embodiments in which the ionically conductive particle is substantially free of particulates are also contemplated (e.g., polymer electrolyte particles).

[00180] Fig. 17 shows one embodiment of a pre-coated particle. In the depicted embodiment, the precoated particle includes a core with one or more core particles 1730 that has an outer maximum transverse dimension d, such as a diameter for a round particle. The core is coated with a layer of binder material 1732 with an average thickness t. The average thickness may correspond to the average thickness of the coating deposited on the surface of the particle including regions where the core particle surface is bare and would correspond to a thickness of zero. Additionally, while the depicted particle is a sphere, it should be understood that other particle geometries, including irregular and or elongated particle geometries may be used for a core particle. For example, core particles with flake geometries, such as potato flake graphite, might be used. Accordingly, a core particle, and resulting pre-coated particle, should not be limited to any particle size and/or shape.

[00181] It should be understood that while exemplary precoated particles including a thermoplastic binder material that are representative of embodiments of particles included in uniform precoated powders are shown in figures 16 and 17, the disclosure is not limited to being used with precoated particles. For example, a first plurality of particles with a desired composition may be mixed with a second plurality of binder particles for spray deposition using the methods and systems disclosed herein as the disclosure is not limited to the types of ionically conductive powders that may be deposited.

[00182] The various methods disclosed above may be implemented by one or more controllers including at least one processor operatively coupled to the various controllable portions of a spray deposition system as disclosed herein. Alternatively or additionally, in some embodiments, the disclosed methods may be performed at least in part, and in some instances completely, on a computing device that is separate and removed from the disclosed spray deposition systems. In either case, the disclosed methods may be embodied as computer readable instructions stored on non-transitory computer readable memory associated with the at least one processor such that when executed by the at least one processor the associated system, which may be a spray deposition system in some embodiments, may perform any of the actions related to the methods disclosed herein. Additionally, it should be understood that the disclosed order of the steps is exemplary and that the disclosed steps may be performed in a different order, simultaneously, and/or may include one or more additional intermediate steps not shown as the disclosure is not so limited.

[00183] The above-described embodiments of the technology described herein can be implemented in any of numerous ways. For example, the embodiments may be implemented using hardware, software or a combination thereof. When implemented in software, the software code can be executed on any suitable processor or collection of processors, whether provided in a single computing device or distributed among multiple computing devices. Such processors may be implemented as integrated circuits, with one or more processors in an integrated circuit component, including commercially available integrated circuit components known in the art by names such as CPU chips, GPU chips, microprocessor, microcontroller, or co-processor. Alternatively, a processor may be implemented in custom circuitry, such as an ASIC, or semicustom circuitry resulting from configuring a programmable logic device. As yet a further alternative, a processor may be a portion of a larger circuit or semiconductor device, whether commercially available, semi-custom or custom. As a specific example, some commercially available microprocessors have multiple cores such that one or a subset of those

cores may constitute a processor. Though, a processor may be implemented using circuitry in any suitable format.

[00184] Further, it should be appreciated that a computing device may be embodied in any of a number of forms, such as a rack-mounted computer, a desktop computer, a laptop computer, or a tablet computer. Additionally, a computing device may be embedded in a device not generally regarded as a computing device but with suitable processing capabilities, including a Personal Digital Assistant (PDA), a smart phone, tablet, or any other suitable portable or fixed electronic device.

[00185] Also, a computing device may have one or more input and output devices. These devices can be used, among other things, to present a user interface. Examples of output devices that can be used to provide a user interface include display screens for visual presentation of output and speakers or other sound generating devices for audible presentation of output. Examples of input devices that can be used for a user interface include keyboards, individual buttons, and pointing devices, such as mice, touch pads, and digitizing tablets. As another example, a computing device may receive input information through speech recognition or in other audible format.

[00186] With reference to Fig. 18, an exemplary system for implementing aspects of the disclosure includes a general purpose computing device in the form of a computer 1810 or other appropriate computing device. For example, the depicted computing device may be used to control one or more operations of a spray deposition system by implementing any of the methods disclosed herein. Components of computer 1810 may include, but are not limited to, a processing unit 1820, a system memory 1830, and a system bus 1821 that couples various system components including the system memory to the processing unit 1820. The system bus 1821 may be any of several types of bus structures including a memory bus or memory controller, a peripheral bus, and a local bus using any of a variety of bus architectures. By way of example, and not limitation, such architectures include Industry Standard Architecture (ISA) bus, Micro Channel Architecture (MCA) bus, Enhanced ISA (EISA) bus, Video Electronics Standards Association (VESA) local bus, and Peripheral Component Interconnect (PCI) bus also known as Mezzanine bus.

[00187] Computer 1810 typically includes a variety of computer readable media. Computer readable media can be any available media that can be accessed by computer 1810 and includes both volatile and nonvolatile media, removable and non-removable media. By way of example, and not limitation, computer readable media may comprise computer storage media and communication media. Computer storage media includes both volatile and nonvolatile,

removable and non-removable media implemented in any method or technology for storage of information such as computer readable instructions, data structures, program modules or other data. Computer storage media includes, but is not limited to, RAM, ROM, EEPROM, flash memory or other memory technology, CD-ROM, digital versatile disks (DVD) or other optical disk storage, magnetic cassettes, magnetic tape, magnetic disk storage or other magnetic storage devices, or any other medium which can be used to store the desired information and which can accessed by computer 1810. Communication media typically embodies computer readable instructions, data structures, program modules or other data in a modulated data signal such as a carrier wave or other transport mechanism and includes any information delivery media. The term "modulated data signal" means a signal that has one or more of its characteristics set or changed in such a manner as to encode information in the signal. By way of example, and not limitation, communication media includes wired media such as a wired network or direct-wired connection, and wireless media such as acoustic, RF, infrared and other wireless media. Combinations of the any of the above should also be included within the scope of computer readable media.

[00188] The system memory 1830 includes computer storage media in the form of volatile and/or nonvolatile memory such as read only memory (ROM) 1831 and random access memory (RAM) 1832. A basic input/output system 1833 (BIOS), containing the basic routines that help to transfer information between elements within computer 1810, such as during start-up, is typically stored in ROM 1831. RAM 1832 typically contains data and/or program modules that are immediately accessible to and/or presently being operated on by processing unit 1820. By way of example, and not limitation, Fig. 18 illustrates operating system 1834, application programs 1835, other program modules 1836, and program data 1837.

[00189] The computer 1810 may also include other removable/non-removable, volatile/nonvolatile computer storage media. By way of example only, Fig. 18 illustrates a hard disk drive 1841 that reads from or writes to non-removable, nonvolatile magnetic media, a magnetic disk drive 1851 that reads from or writes to a removable, nonvolatile magnetic disk 1852, and an optical disk drive 1855 that reads from or writes to a removable, nonvolatile optical disk 1856 such as a CD ROM or other optical media. Other removable/non-removable, volatile/nonvolatile computer storage media that can be used in the exemplary operating environment include, but are not limited to, magnetic tape cassettes, flash memory cards, digital versatile disks, digital video tape, solid state RAM, solid state ROM, and the like. The hard disk drive 1841 is typically connected to the system bus 1821 through an non-removable memory interface such as interface 1840, and magnetic disk drive 1851 and optical disk drive 1855 are

typically connected to the system bus 1821 by a removable memory interface, such as interface 1850.

[00190] The drives and their associated computer storage media discussed above and illustrated in Fig. 18, provide storage of computer readable instructions, data structures, program modules and other data for the computer 1810. In Fig. 18, for example, hard disk drive 1841 is illustrated as storing operating system 1844, application programs 1845, other program modules 1846, and program data 1847. Note that these components can either be the same as or different from operating system 1834, application programs 1835, other program modules 1836, and program data 1837. Operating system 1844, application programs 1845, other program modules 1846, and program data 1847 are given different numbers here to illustrate that, at a minimum, they are different copies. A user may enter commands and information into the computer 1810 through input devices such as a keyboard 1862 and pointing device 1861, commonly referred to as a mouse, trackball or touch pad. Other input devices (not shown) may include a microphone, joystick, game pad, satellite dish, scanner, or the like. These and other input devices are often connected to the processing unit 1820 through a user input interface 1860 that is coupled to the system bus but may be connected by other interface and bus structures, such as a parallel port, game port or a universal serial bus (USB). A monitor 1891 or other type of display device is also connected to the system bus 1821 via an interface, such as a video interface 1890. In addition to the monitor, computers may also include other peripheral output devices such as speakers 1897 and printer 1896, which may be connected through a output peripheral interface 1895.

[00191] The computer 1810 may operate in a networked environment using logical connections to one or more remote computers, such as a remote computer 1880. The remote computer 1880 may be a personal computer, a server, a router, a network PC, a peer device or other common network node, and typically includes many or all of the elements described above relative to the computer 1810, although only a memory storage device 1881 has been illustrated in Fig. 18. The logical connections depicted in Fig. 18 include a local area network (LAN) 1871 and a wide area network (WAN) 1873 but may also include other networks. Such networking environments are commonplace in offices, enterprise-wide computer networks, intranets and the Internet.

[00192] When used in a LAN networking environment, the computer 1810 is connected to the LAN 1871 through a network interface or adapter 1870. When used in a WAN networking environment, the computer 1810 typically includes a modem 1872 or other means for establishing communications over the WAN 1873, such as the Internet. The modem 1872, which

may be internal or external, may be connected to the system bus 1821 via the user input interface 1860, or other appropriate mechanism. In a networked environment, program modules depicted relative to the computer 1810, or portions thereof, may be stored in the remote memory storage device. By way of example, and not limitation, Fig. 18 illustrates remote application programs 1885 as residing on memory device 1881. It will be appreciated that the network connections shown are exemplary and other means of establishing a communications link between the computers may be used.

[00193] The various methods or processes outlined herein may be implemented in any suitable hardware. Additionally, the various methods or processes outlined herein may be implemented in a combination of hardware and of software executable on one or more processors that employ any one of a variety of operating systems or platforms. Examples of such approaches are described above. However, any suitable combination of hardware and software may be employed to realize any of the embodiments discussed herein.

[00194] Also, the various methods or processes outlined herein may be coded as software that is executable on one or more processors that employ any one of a variety of operating systems or platforms. Additionally, such software may be written using any of a number of suitable programming languages and/or programming or scripting tools, and also may be compiled as executable machine language code or intermediate code that is executed on a framework or virtual machine.

[00195] In this respect, various inventive concepts may be embodied as at least one non-transitory computer readable storage medium (e.g., a computer memory, one or more floppy discs, compact discs, optical discs, magnetic tapes, flash memories, circuit configurations in Field Programmable Gate Arrays or other semiconductor devices, etc.) encoded with one or more programs that, when executed on one or more computers or other processors, implement the various embodiments of the present disclosure. The non-transitory computer-readable medium or media may be transportable, such that the program or programs stored thereon may be loaded onto any computer resource to implement various aspects of the present disclosure as discussed above.

[00196] The terms “program” or “software” are used herein in a generic sense to refer to any type of computer code or set of computer-executable instructions that can be employed to program a computer or other processor to implement various aspects of embodiments as discussed above. Additionally, it should be appreciated that according to one aspect, one or more computer programs that when executed perform methods of the present disclosure need not

reside on a single computer or processor but may be distributed in a modular fashion among different computers or processors to implement various aspects of the present disclosure.

[00197] Computer-executable instructions may be in many forms, such as program modules, executed by one or more computers or other devices. Generally, program modules include routines, programs, objects, components, data structures, etc. that perform particular tasks or implement particular abstract data types. Typically, the functionality of the program modules may be combined or distributed as desired in various embodiments.

[00198] The embodiments described herein may be embodied as a method, of which an example has been provided. The acts performed as part of the method may be ordered in any suitable way. Accordingly, embodiments may be constructed in which acts are performed in an order different than illustrated, which may include performing some acts simultaneously, even though shown as sequential acts in illustrative embodiments.

[00199] Further, some actions are described as taken by a "user." It should be appreciated that a "user" need not be a single individual, and that in some embodiments, actions attributable to a "user" may be performed by a team of individuals and/or an individual in combination with computer-assisted tools or other mechanisms.

[00200] While the present teachings have been described in conjunction with various embodiments and examples, it is not intended that the present teachings be limited to such embodiments or examples. On the contrary, the present teachings encompass various alternatives, modifications, and equivalents, as will be appreciated by those of skill in the art. Accordingly, the foregoing description and drawings are by way of example only.

CLAIMS

1. A spray deposition system comprising:

an ionically conductive powder source;

a sprayer configured to aerosolize and spray ionically conductive powder from the ionically conductive powder source towards a substrate to form an ionically conductive layer on the substrate;

a heater configured to heat the substrate; and

a feed system configured to feed the substrate past the sprayer, wherein the feed system is configured to maintain a tensile force in the substrate to compensate for thermal expansion of the substrate during spray deposition of the ionically conductive layer.

2. The spray deposition system of claim 1, wherein the feed system includes at least two clamps configured to be clamped onto the substrate at locations upstream and downstream from the sprayer, and wherein at least one of the at least two clamps is configured to be displaced while clamped onto the substrate to maintain the tensile force in the substrate.

3. The spray deposition system of claim 1, wherein the ionically conductive layer is formed continuously and the feed system is configured to feed the substrate past the sprayer continuously.

4. The spray deposition system of claim 3, wherein a first feed rate upstream of the sprayer is less than a second feed rate downstream of the substrate, and wherein a difference in the first feed rate and the second feed rate is approximately equal to an amount of thermal expansion of the substrate in a feed direction of the substrate.

5. The spray deposition system of claim 4, further comprising a pair of calendaring rollers configured to calendar the ionically conductive layer disposed on the substrate, wherein the pair of calendaring rollers are configured to maintain the tensile force in the substrate at the second feed rate.

6. The spray deposition system of claim 5, further comprising one or more motors configured to actively drive rotation of at least one calendaring roller of the pair of calendaring rollers.

7. The spray deposition system of claim 6, wherein the one or more motors are configured to maintain the tensile in the substrate.

8. The spray deposition system of any one of the preceding claims, further comprising at least two offset conductive heaters configured to form a serpentine path of movement for the substrate, and wherein the at least two offset conductive heaters are configured to preheat the substrate upstream from the sprayer, and wherein the at least two offset conductive heaters are configured to create a difference in tensile force from a portion of the substrate upstream from the at least two offset conductive heaters and a portion of the substrate downstream from the at least two offset conductive heaters.

9. The spray deposition system of claim 8, wherein the at least two offset conductive heaters are curved to form the serpentine path of movement for the substrate.

10. The spray deposition system of any one of the preceding claims, wherein the feed system is configured to maintain the tensile force in the substrate between or equal to about 1 N and 1000 N.

11. The spray deposition system of any one of the preceding claims, wherein the feed system includes a feed reel upstream from the sprayer and a collection reel downstream from the sprayer, wherein the feed reel and the collection reel are oriented vertically.

12. The spray deposition system of any one of the preceding claims, further comprising the substrate, and wherein the substrate is a metallic foil.

13. The spray deposition system of any one of the preceding claims, further comprising the ionically conductive powder disposed in the ionically conductive powder source, and wherein the ionically conductive powder includes ionically conductive powder particles precoated with a thermoplastic binder.

14. The spray deposition system of any one of claims 1-12, further comprising the ionically conductive powder disposed in the ionically conductive powder source, and wherein the ionically conductive powder includes a mixture of ionically conductive powder particles and thermoplastic binder particles.

15. A method for depositing an ionically conductive material onto a substrate, the method comprising:

aerosolizing an ionically conductive powder;

spraying the aerosolized ionically conductive powder towards a substrate to form an ionically conductive layer on the substrate;

heating the substrate; and

maintaining a tensile force in the substrate to compensate for thermal expansion of the substrate during deposition of the ionically conductive layer.

16. The method of claim 15, further comprising clamping the substrate with at least two clamps, and displacing at least one clamp of the at least two clamps while the at least two clamps are clamped to the substrate to maintain the tensile force in the substrate.

17. The method of claim 15, wherein the ionically conductive layer is formed continuously.

18. The method of claim 15 or 17, wherein a first feed rate upstream from a location where the aerosolized ionically conductive powder is sprayed towards the substrate is less than a second feed rate downstream from the location where the aerosolized ionically conductive powder is sprayed towards the substrate, and wherein a difference in the first feed rate and the second feed rate is approximately equal to an amount of thermal expansion of the substrate in a feed direction of the substrate.

19. The method of any one of the preceding claims, further comprising calendaring the ionically conductive layer disposed on the substrate using a pair of calendaring rollers.

20. The method of claim 19, further comprising maintaining the tensile force in the substrate with at least one calendaring roller of the pair of calendaring rollers.

21. The method of any one of the preceding claims, further comprising maintaining a first tensile force in a first portion of the substrate and a second tensile force which is different than the first tensile force in a second portion of the substrate, wherein the second portion of the substrate is downstream from the first portion of the substrate.

22. The method of any one of the preceding claims, wherein maintaining the tensile force in the substrate includes maintaining the tensile force in the substrate between or equal to about 1 N and 1000 N.

23. The method of any one of the preceding claims, wherein the substrate is a metallic foil.

24. The method of any one of the preceding claims, wherein the ionically conductive powder includes ionically conductive powder particles precoated with the thermoplastic binder.

25. The method of any one of claims 15-24, wherein the ionically conductive powder includes a mixture of ionically conductive powder particles and thermoplastic binder particles.

26. The method of any one of the preceding claims, wherein heating the substrate includes heating the substrate to a temperature between or equal to about 60°C to about 300°C.

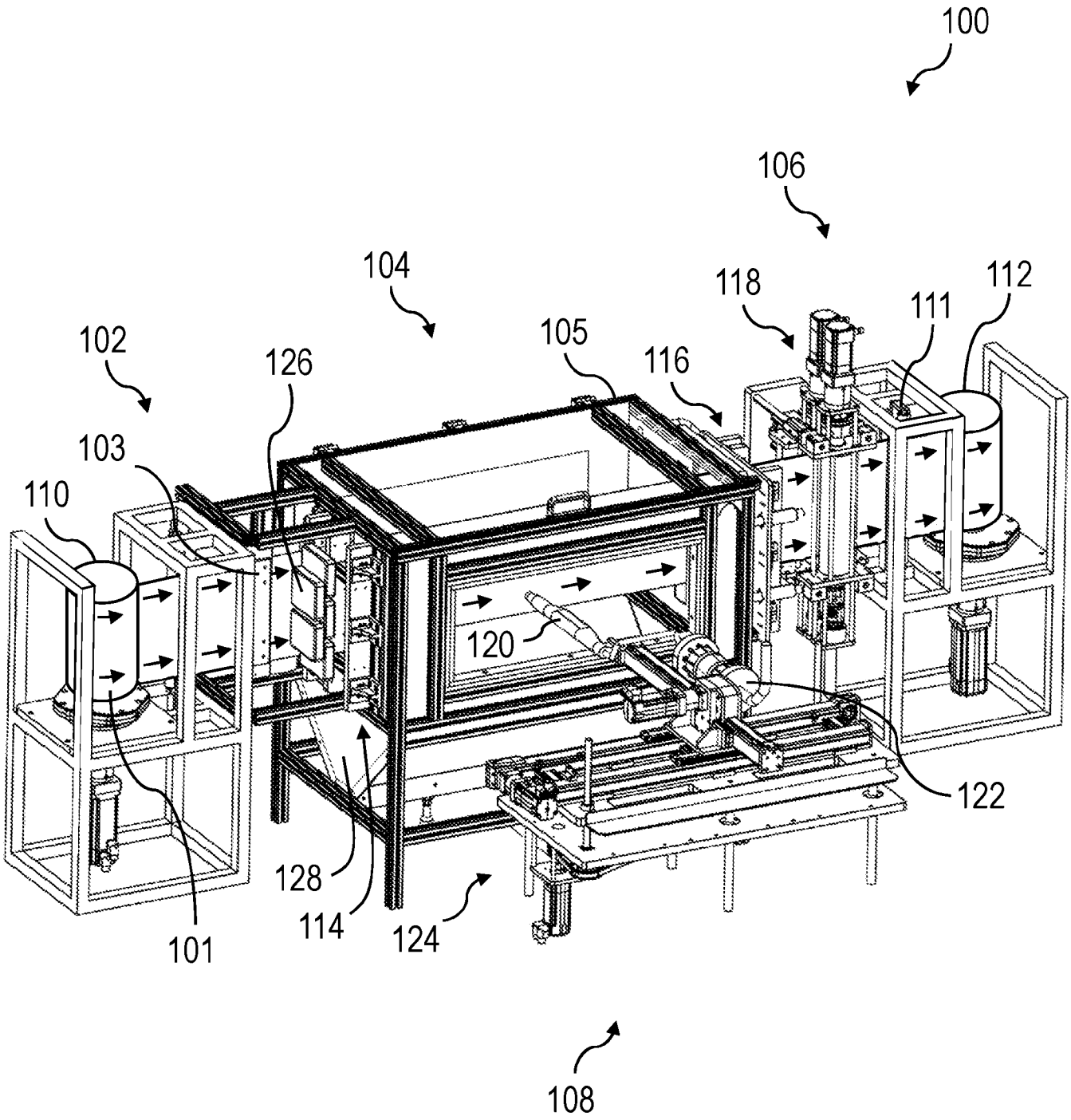
100
106
104
118
112
111
102
105
116
126
103
110
120
122
128
114
124
101
108

FIG. 1

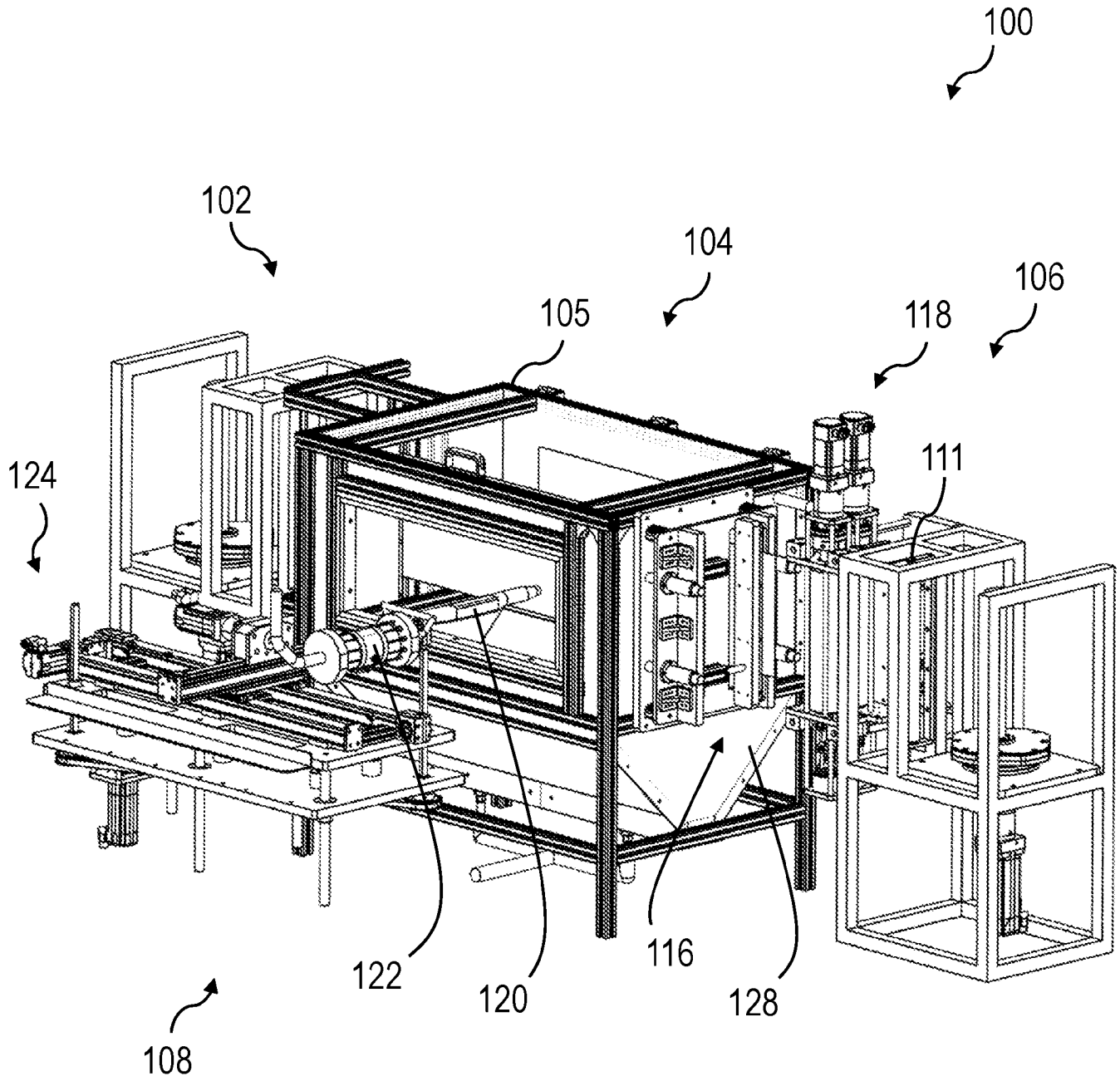

FIG. 2

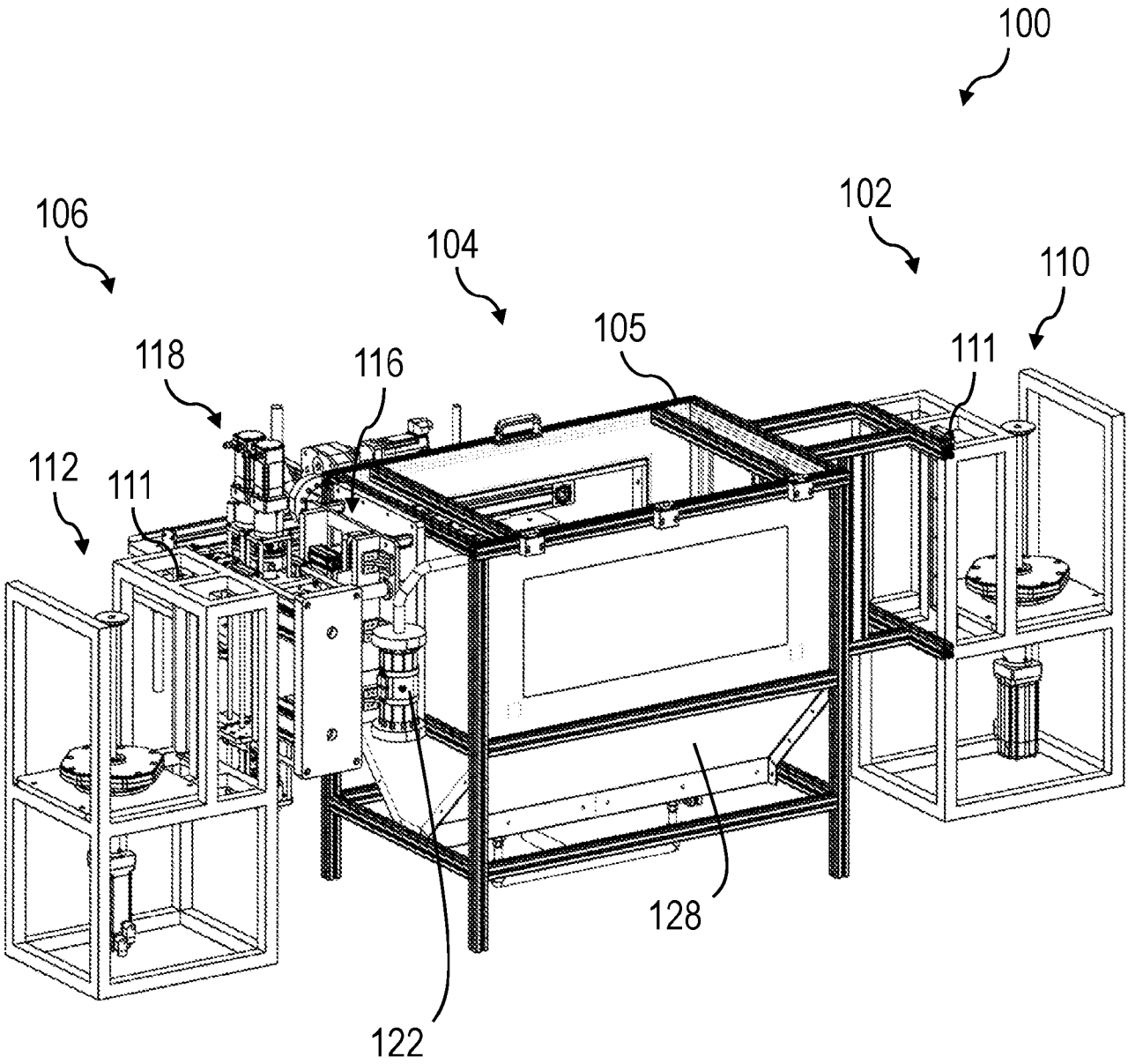

FIG. 3

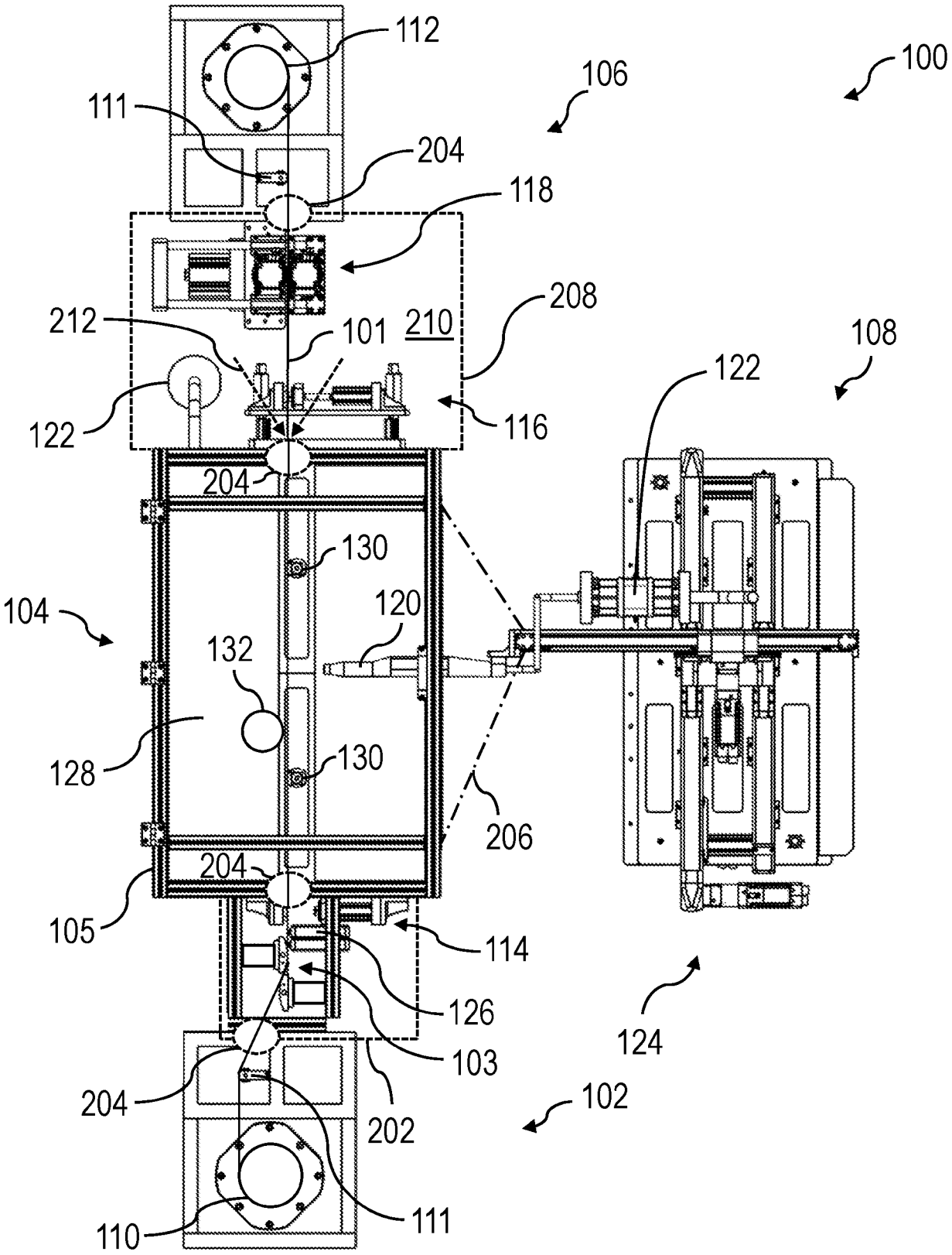
112
111
106
100
204
118
212
101
210
208
108
122
122
116
204
130
104
120
132
128
130
206
204
105
114
126
124
103
204
202
102
110
111

FIG. 4A

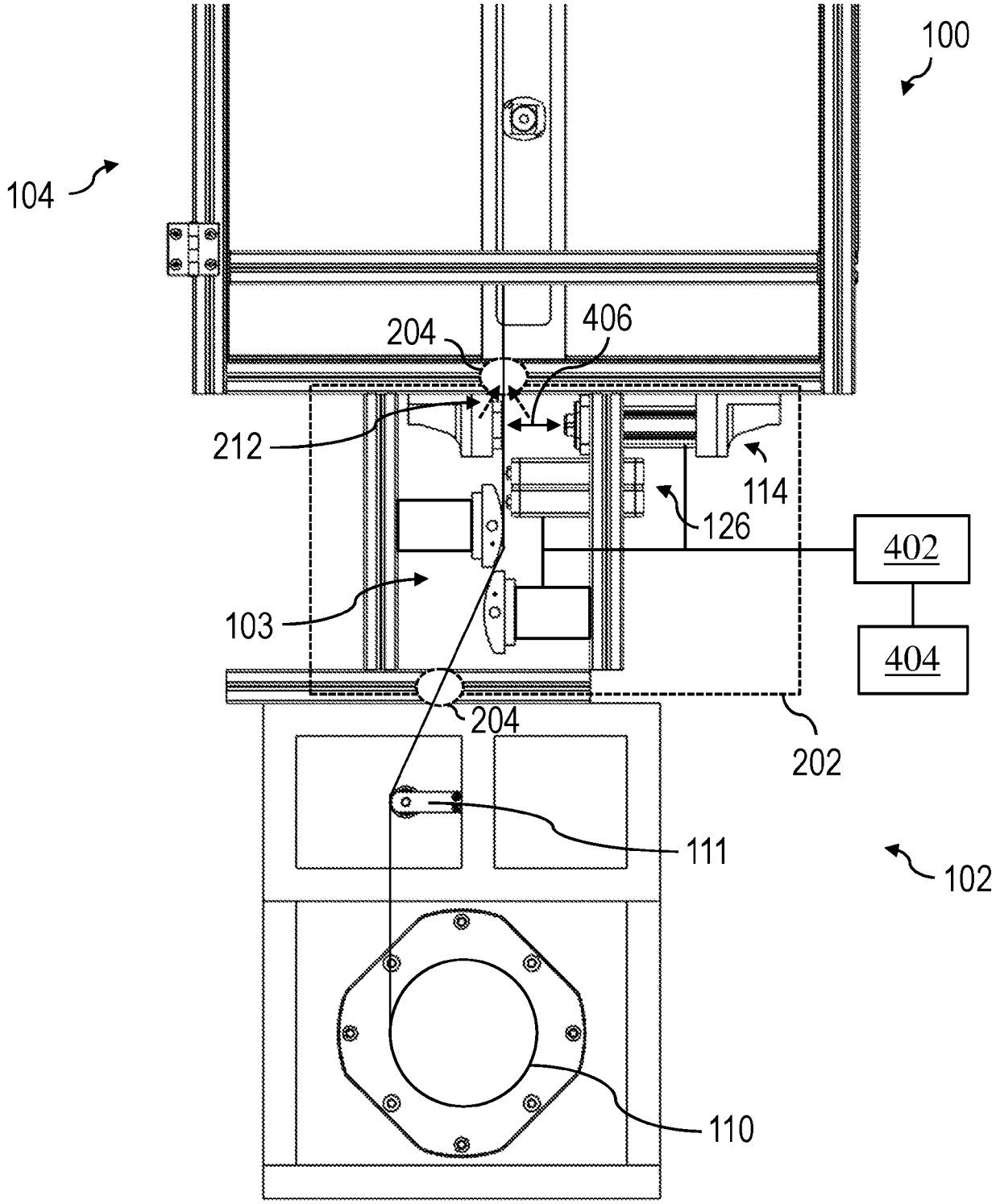

FIG. 4B

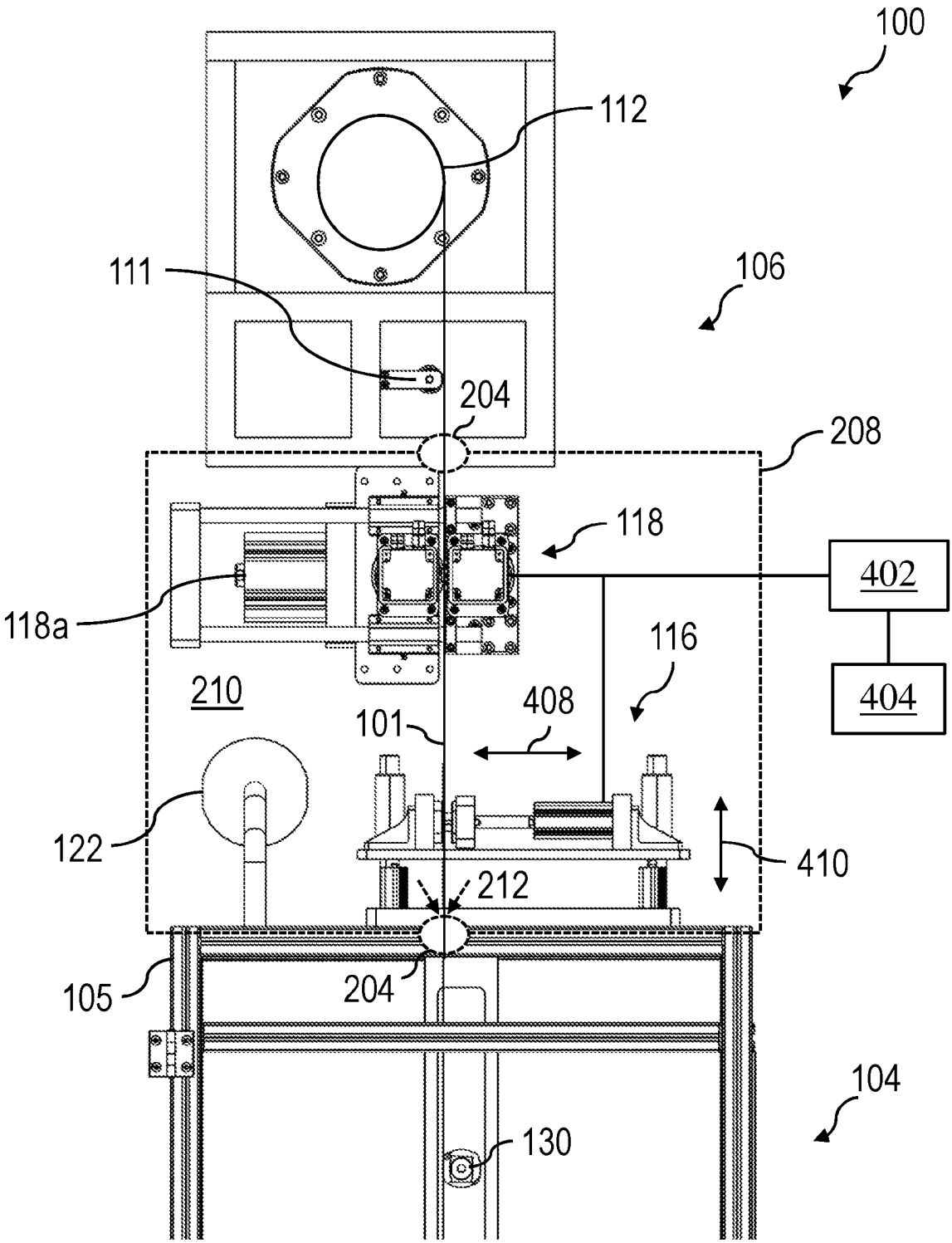
100
112
111
106
204
208
118
402
118a
116
210
408
404
101
122
410
212
105
204
104
130

FIG. 4C

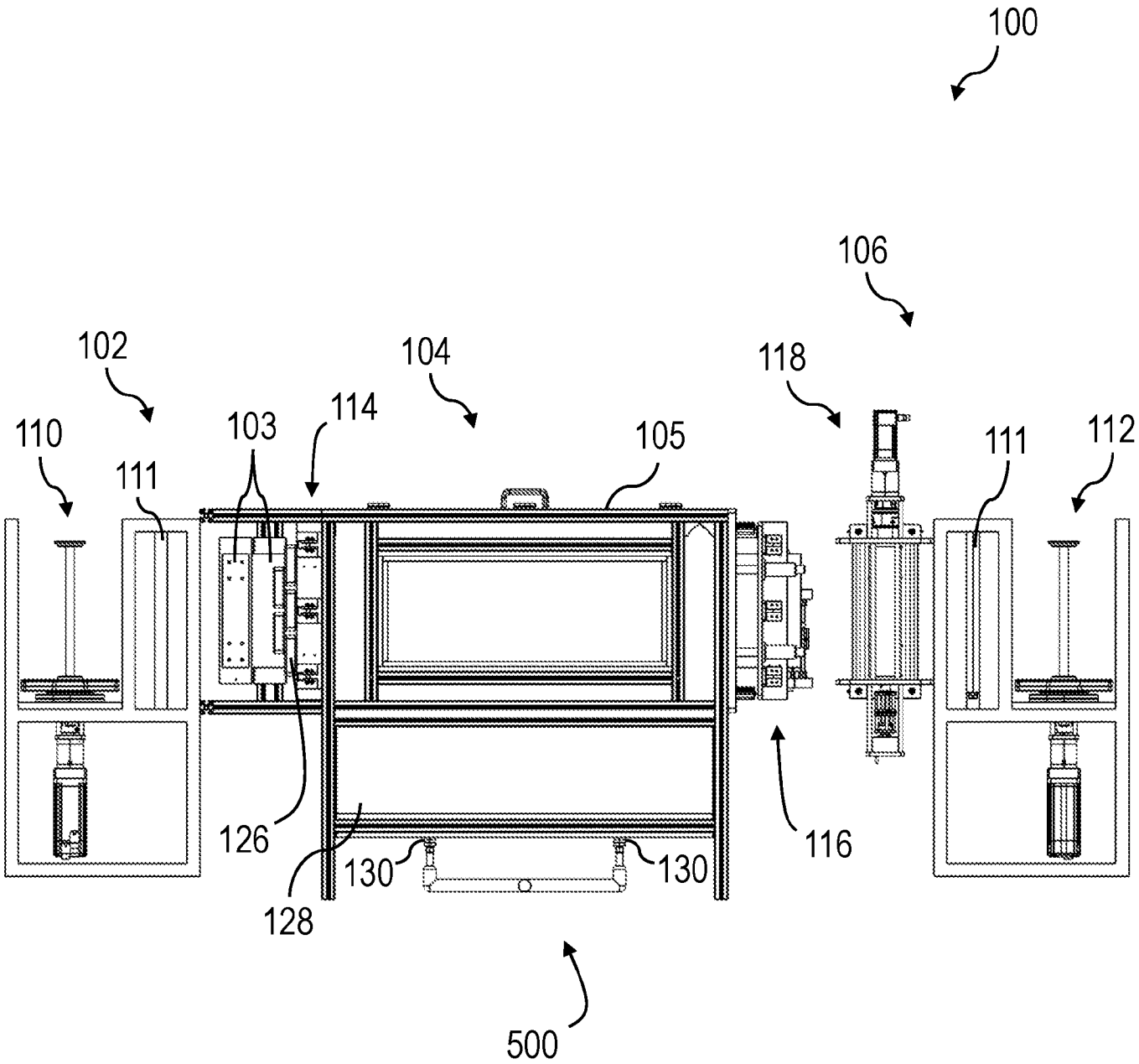
100
106
102
104
118
110
103
114
105
111
111
112
126
116
130
130
128
500

FIG. 5

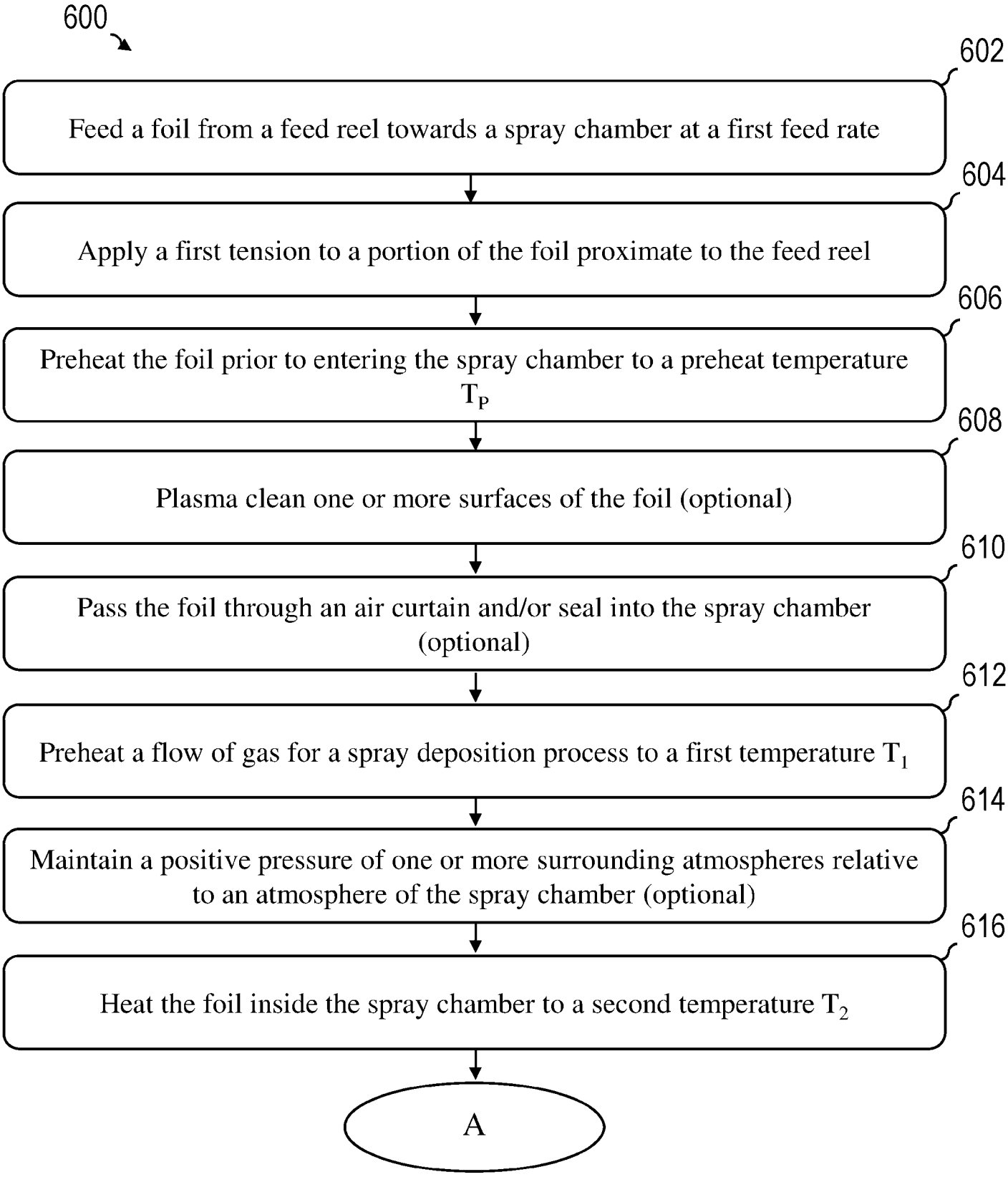
600
602
Feed a foil from a feed reel towards a spray chamber at a first feed rate
604
Apply a first tension to a portion of the foil proximate to the feed reel
606
Preheat the foil prior to entering the spray chamber to a preheat temperature T_P
608
Plasma clean one or more surfaces of the foil (optional)
610
Pass the foil through an air curtain and/or seal into the spray chamber (optional)
612
Preheat a flow of gas for a spray deposition process to a first temperature T_1
614
Maintain a positive pressure of one or more surrounding atmospheres relative to an atmosphere of the spray chamber (optional)
616
Heat the foil inside the spray chamber to a second temperature T_2
A

FIG. 6A

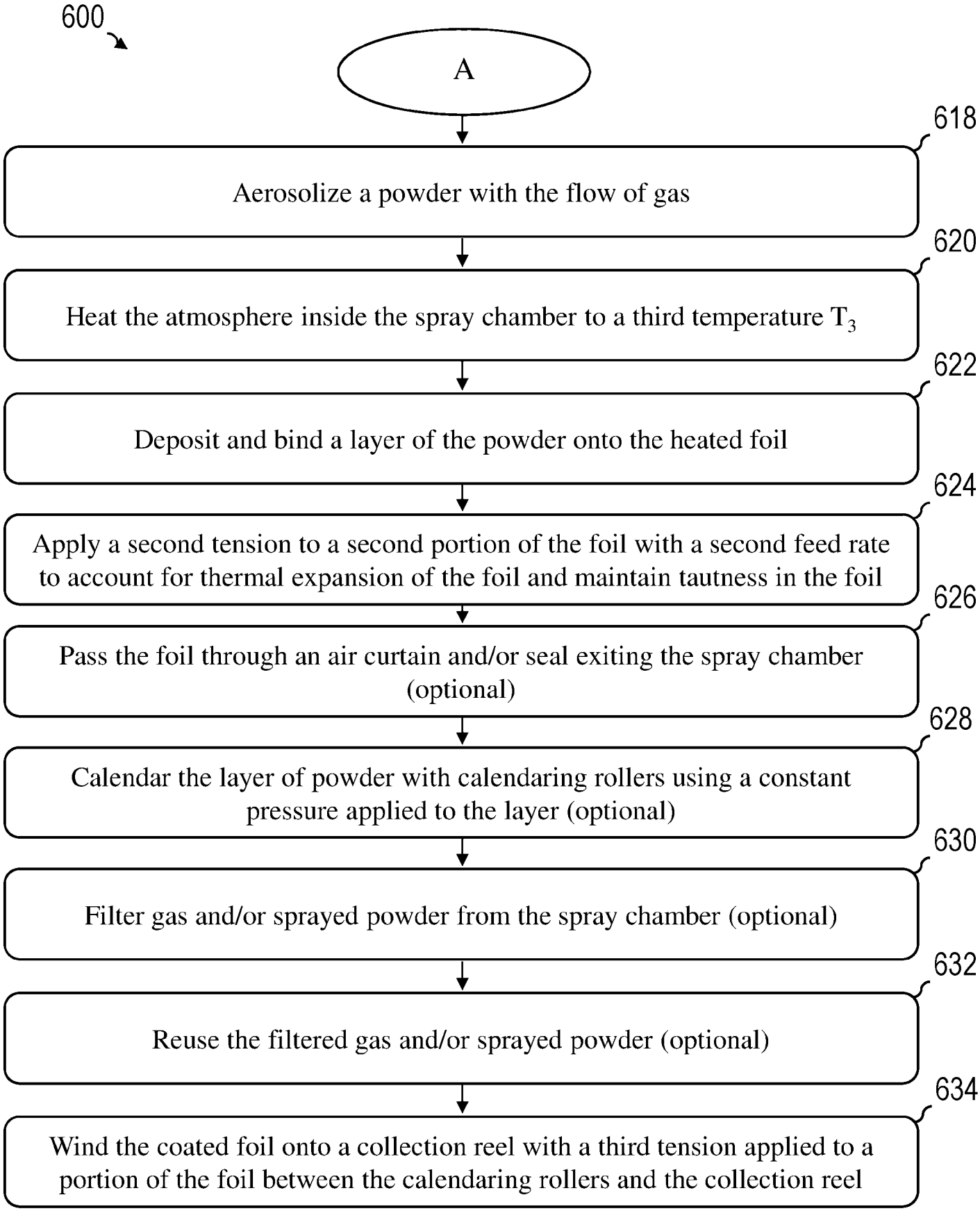
600
A
618
Aerosolize a powder with the flow of gas
620
Heat the atmosphere inside the spray chamber to a third temperature T_3
622
Deposit and bind a layer of the powder onto the heated foil
624
Apply a second tension to a second portion of the foil with a second feed rate to account for thermal expansion of the foil and maintain tautness in the foil
626
Pass the foil through an air curtain and/or seal exiting the spray chamber (optional)
628
Calendar the layer of powder with calendaring rollers using a constant pressure applied to the layer (optional)
630
Filter gas and/or sprayed powder from the spray chamber (optional)
632
Reuse the filtered gas and/or sprayed powder (optional)
634
Wind the coated foil onto a collection reel with a third tension applied to a portion of the foil between the calendaring rollers and the collection reel

FIG. 6B

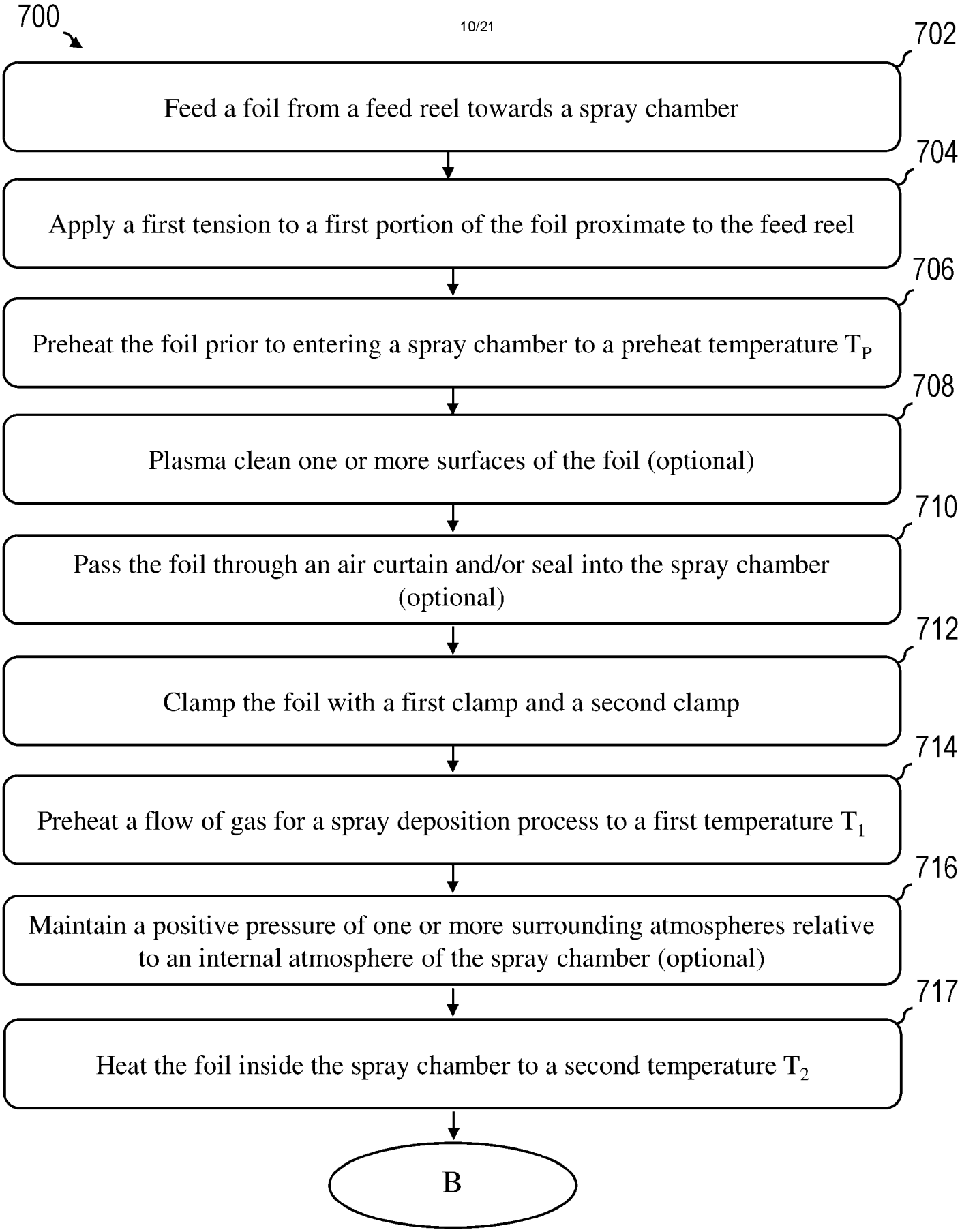
700
702
Feed a foil from a feed reel towards a spray chamber
704
Apply a first tension to a first portion of the foil proximate to the feed reel
706
Preheat the foil prior to entering a spray chamber to a preheat temperature T_P
708
Plasma clean one or more surfaces of the foil (optional)
710
Pass the foil through an air curtain and/or seal into the spray chamber (optional)
712
Clamp the foil with a first clamp and a second clamp
714
Preheat a flow of gas for a spray deposition process to a first temperature T_1
716
Maintain a positive pressure of one or more surrounding atmospheres relative to an internal atmosphere of the spray chamber (optional)
717
Heat the foil inside the spray chamber to a second temperature T_2
B

FIG. 7A

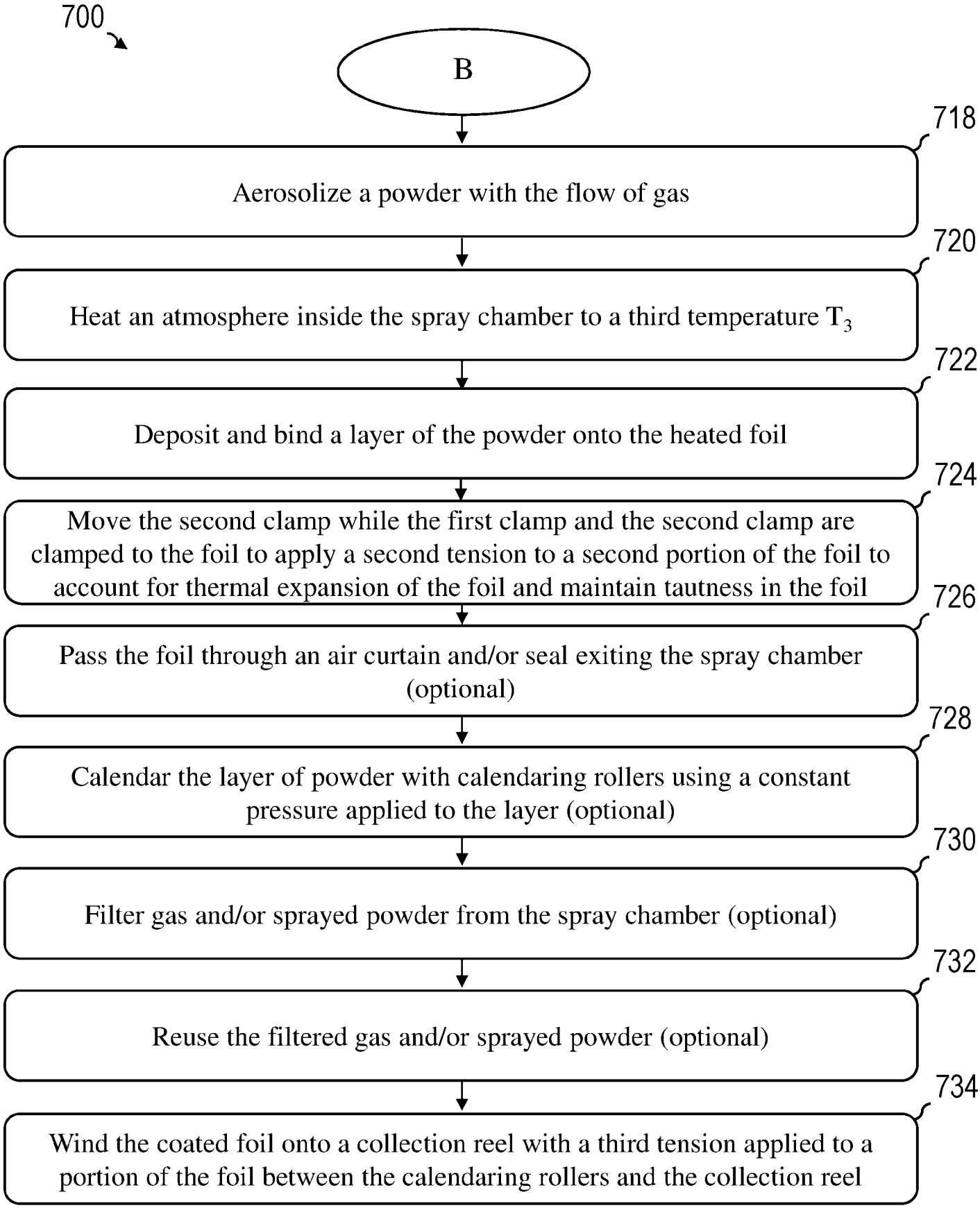
700
B
718
Aerosolize a powder with the flow of gas
720
Heat an atmosphere inside the spray chamber to a third temperature T_3
722
Deposit and bind a layer of the powder onto the heated foil
724
Move the second clamp while the first clamp and the second clamp are clamped to the foil to apply a second tension to a second portion of the foil to account for thermal expansion of the foil and maintain tautness in the foil
726
Pass the foil through an air curtain and/or seal exiting the spray chamber (optional)
728
Calendar the layer of powder with calendaring rollers using a constant pressure applied to the layer (optional)
730
Filter gas and/or sprayed powder from the spray chamber (optional)
732
Reuse the filtered gas and/or sprayed powder (optional)
734
Wind the coated foil onto a collection reel with a third tension applied to a portion of the foil between the calendaring rollers and the collection reel

FIG. 7B

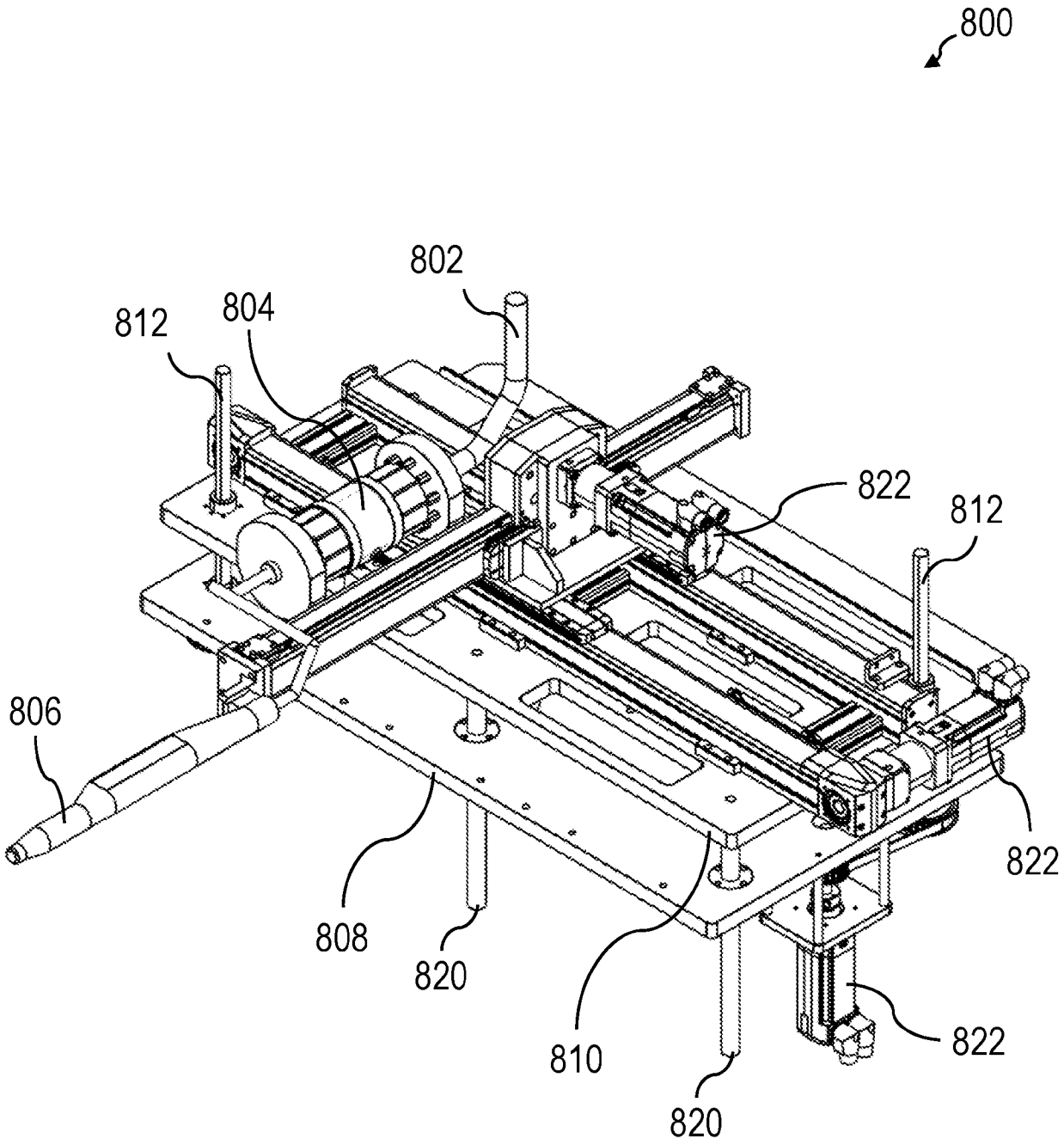

FIG. 8

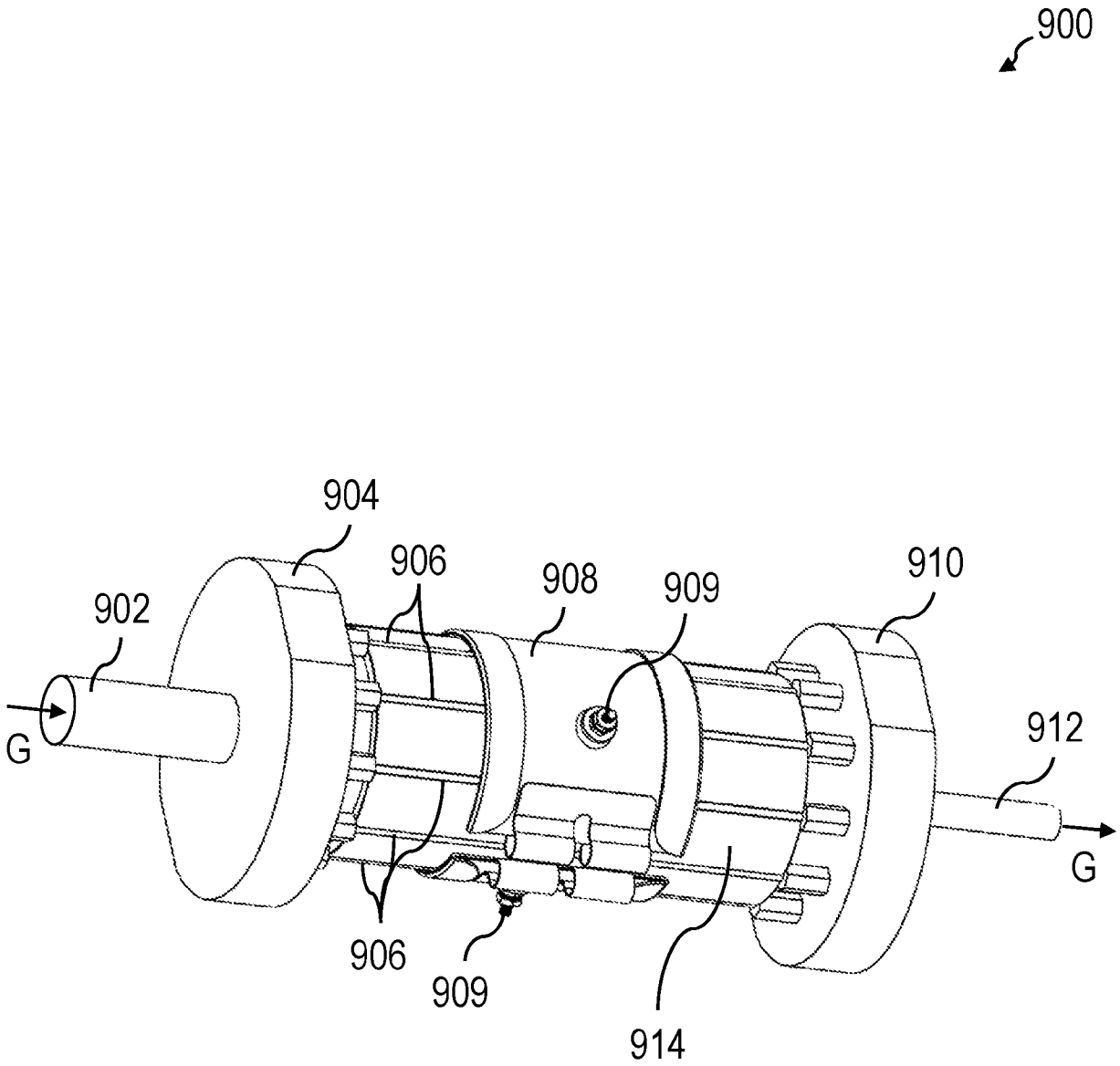

FIG. 9

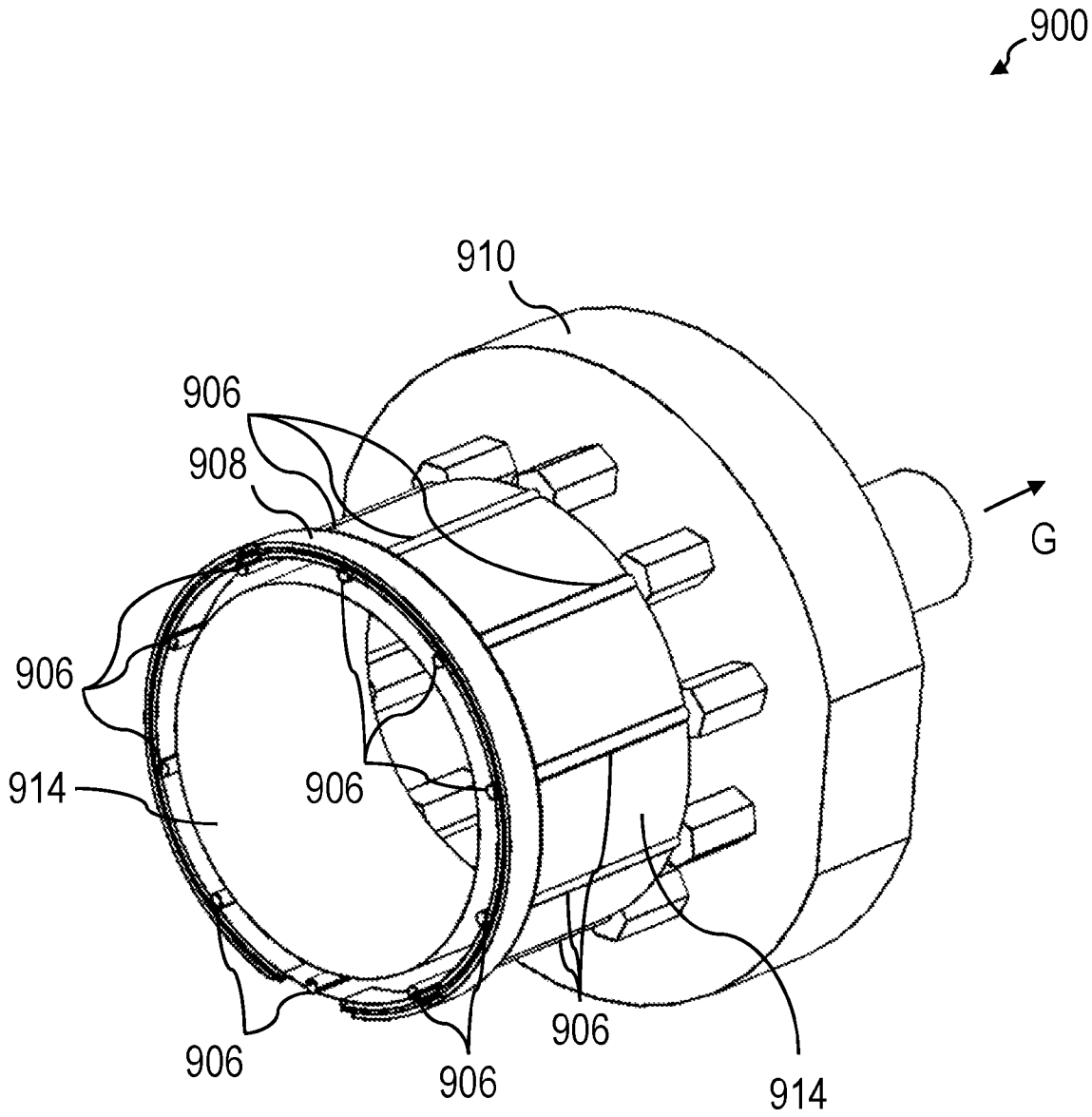

FIG. 10

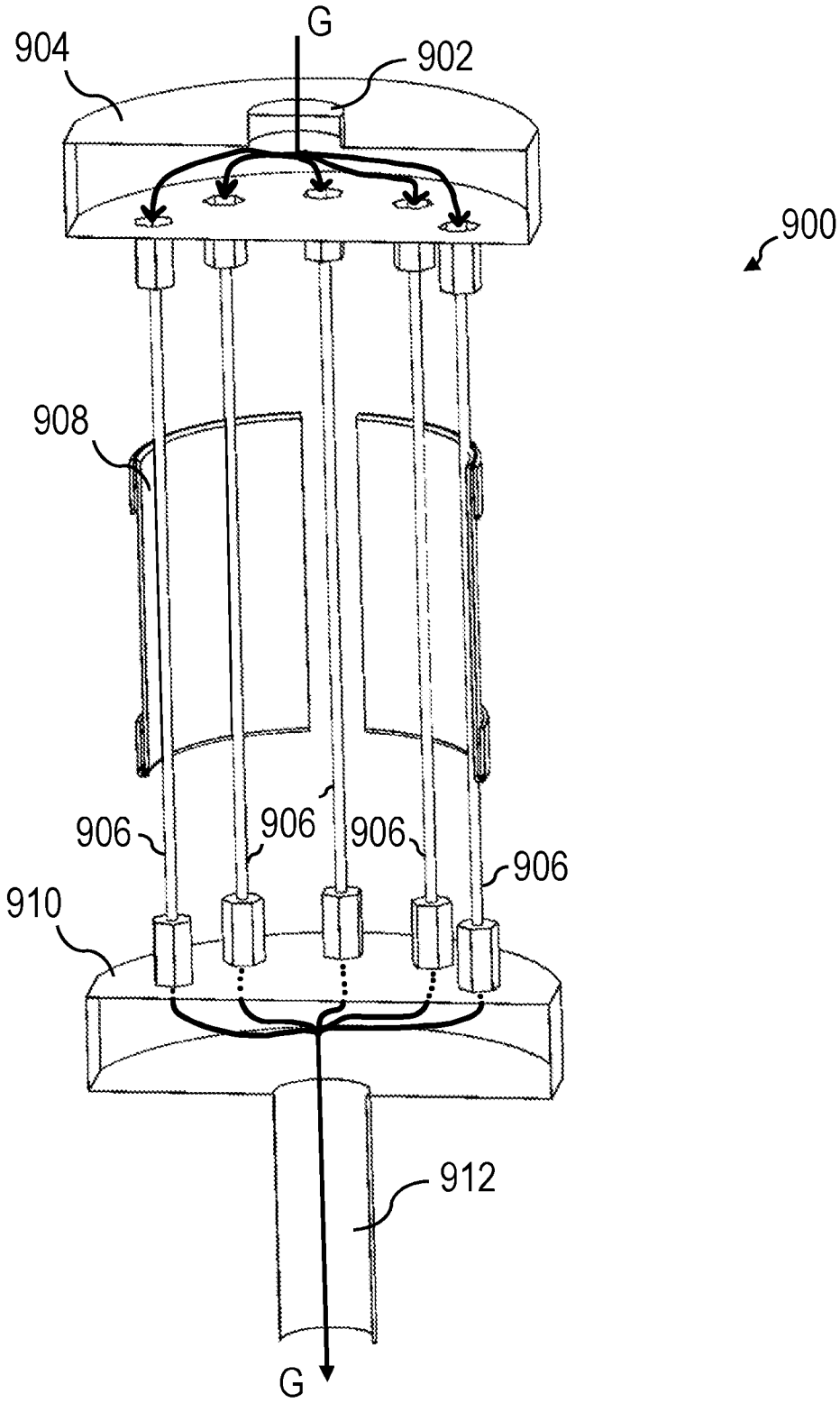

FIG. 11

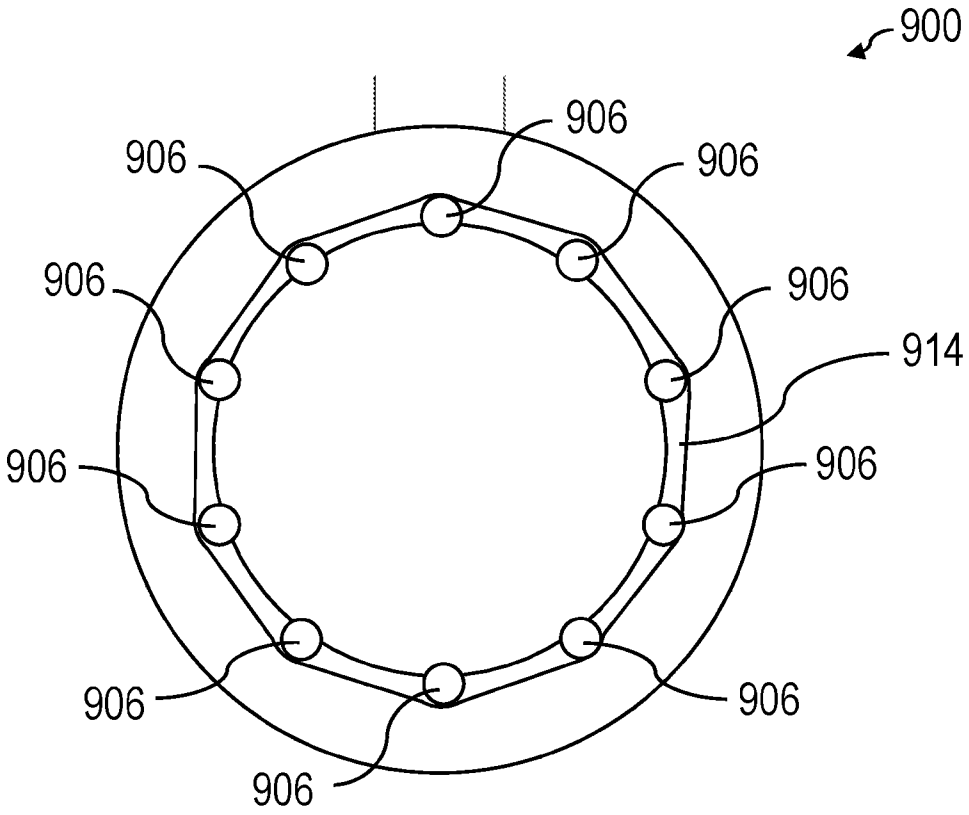

FIG. 12

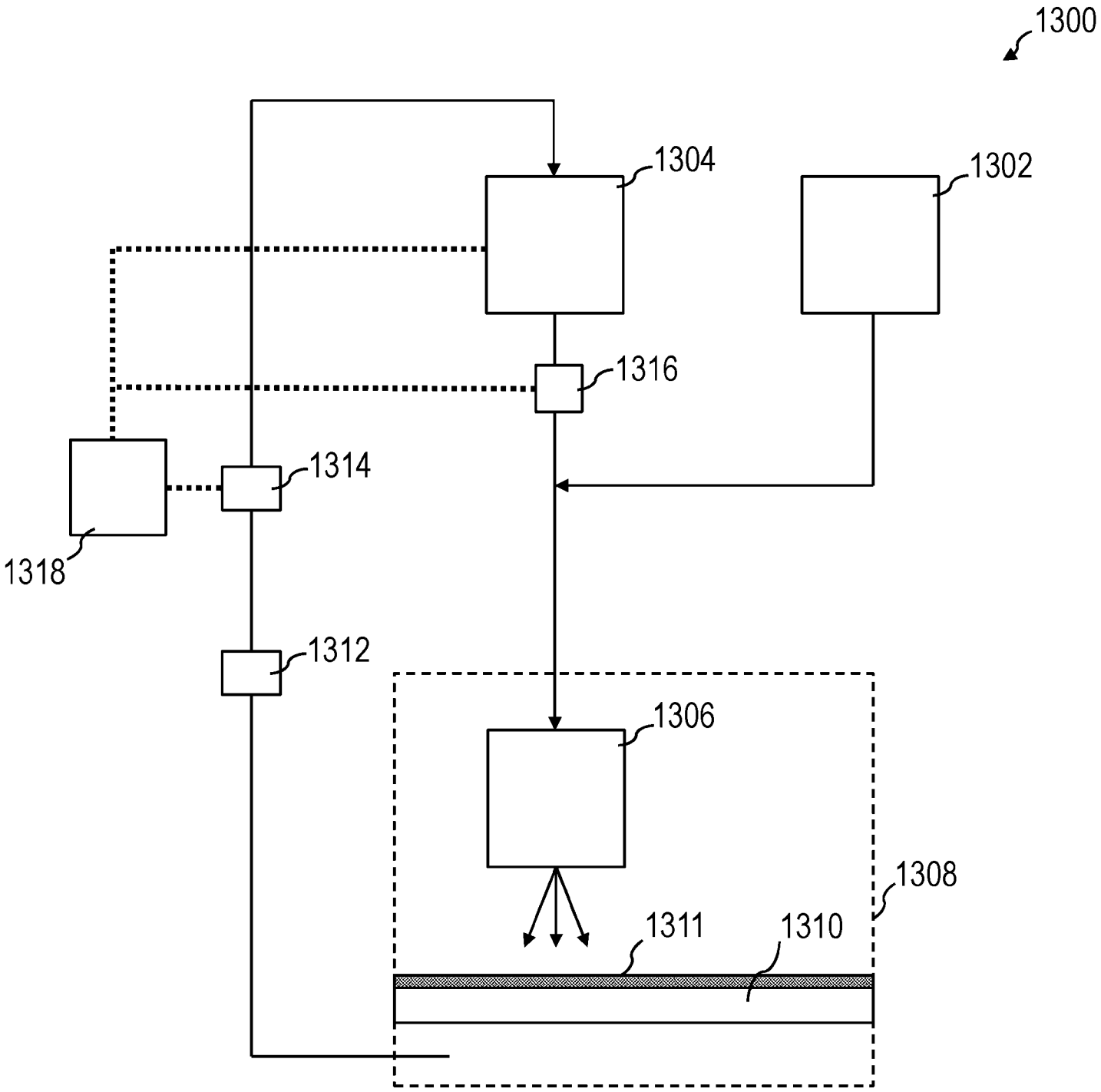

FIG. 13

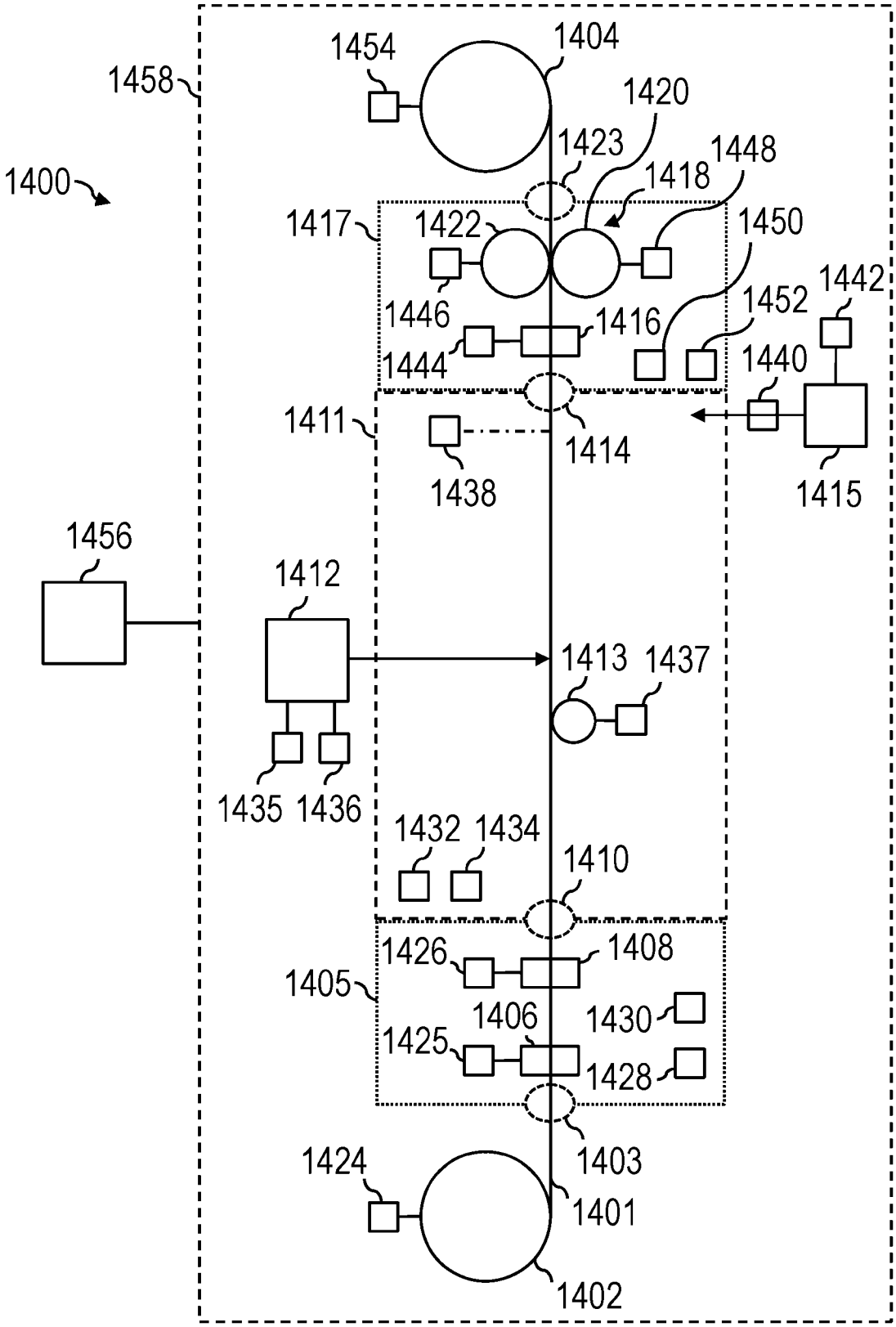
1454
1404
1458
1420
1423
1448
1400
1418
1417
1422
1450
1442
1446
1452
1416
1444
1440
1411
1414
1438
1415
1456
1412
1413
1437
1435
1436
1432
1434
1410
1426
1408
1405
1406
1430
1425
1428
1403
1424
1401
1402

FIG. 14

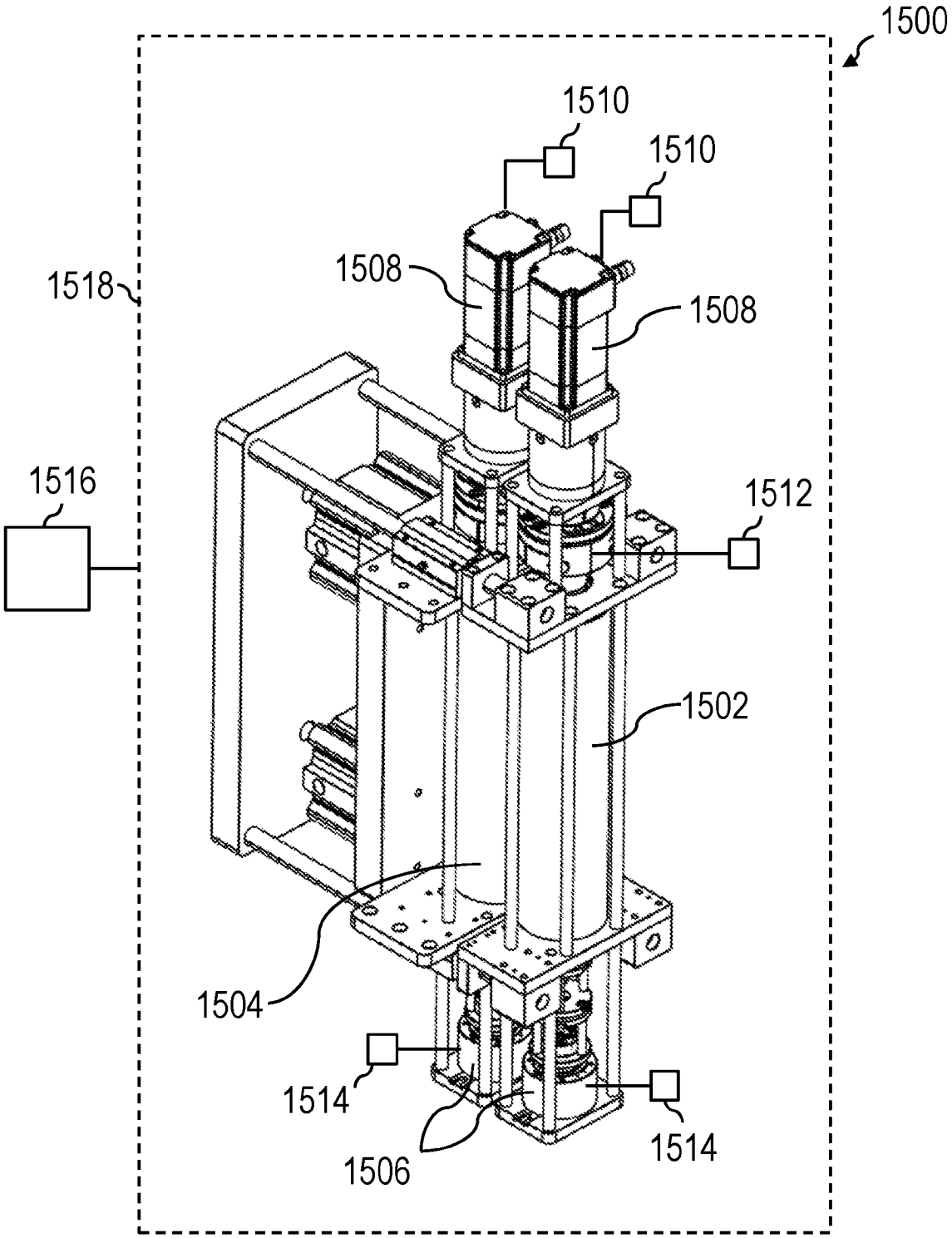
1500
1510
1510
1508
1508
1518
1516
1512
1502
1504
1514
1514
1506

FIG. 15

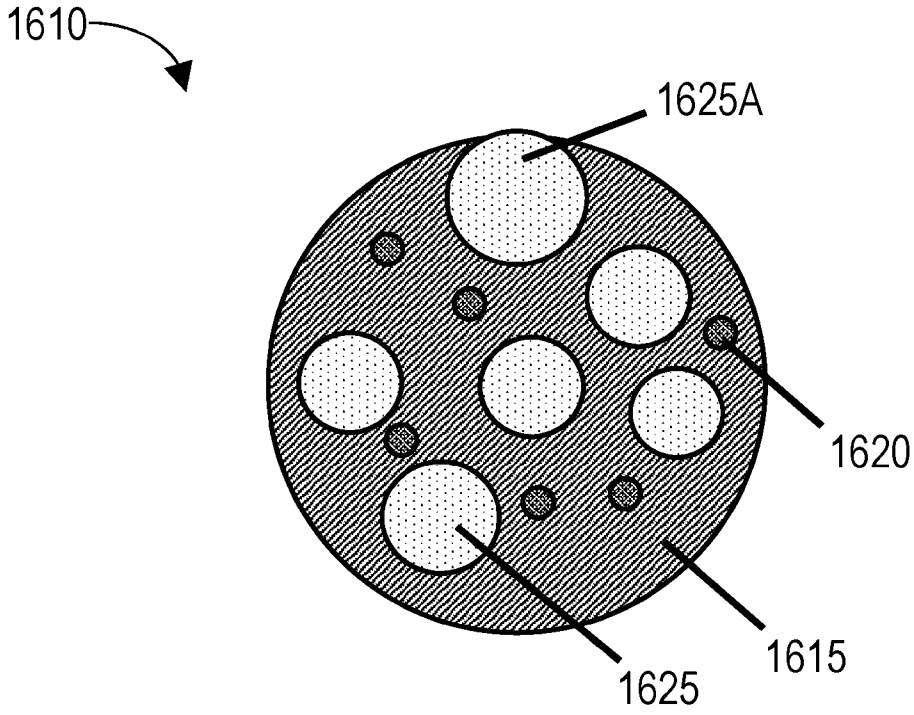

FIG. 16

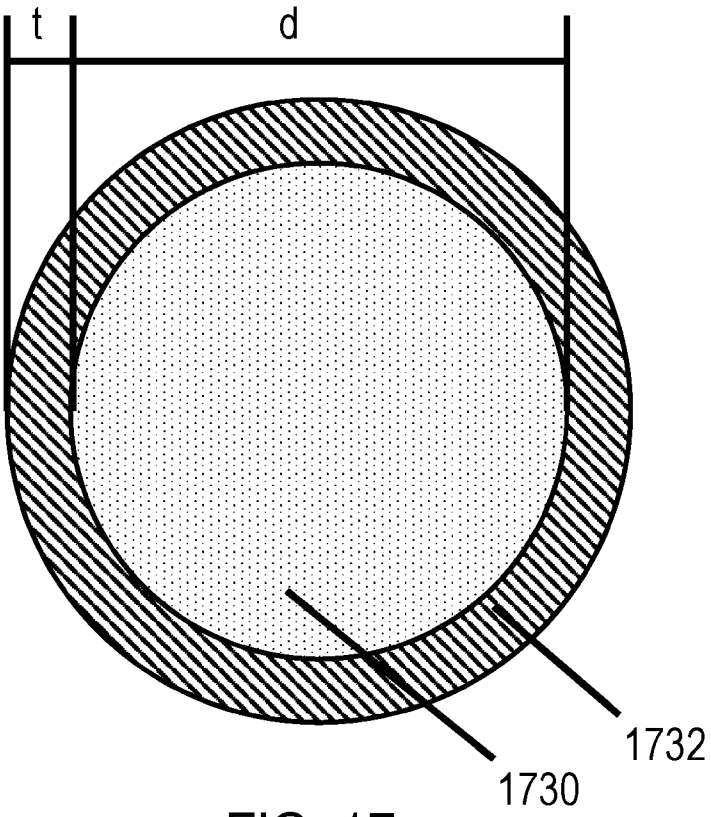

FIG. 17

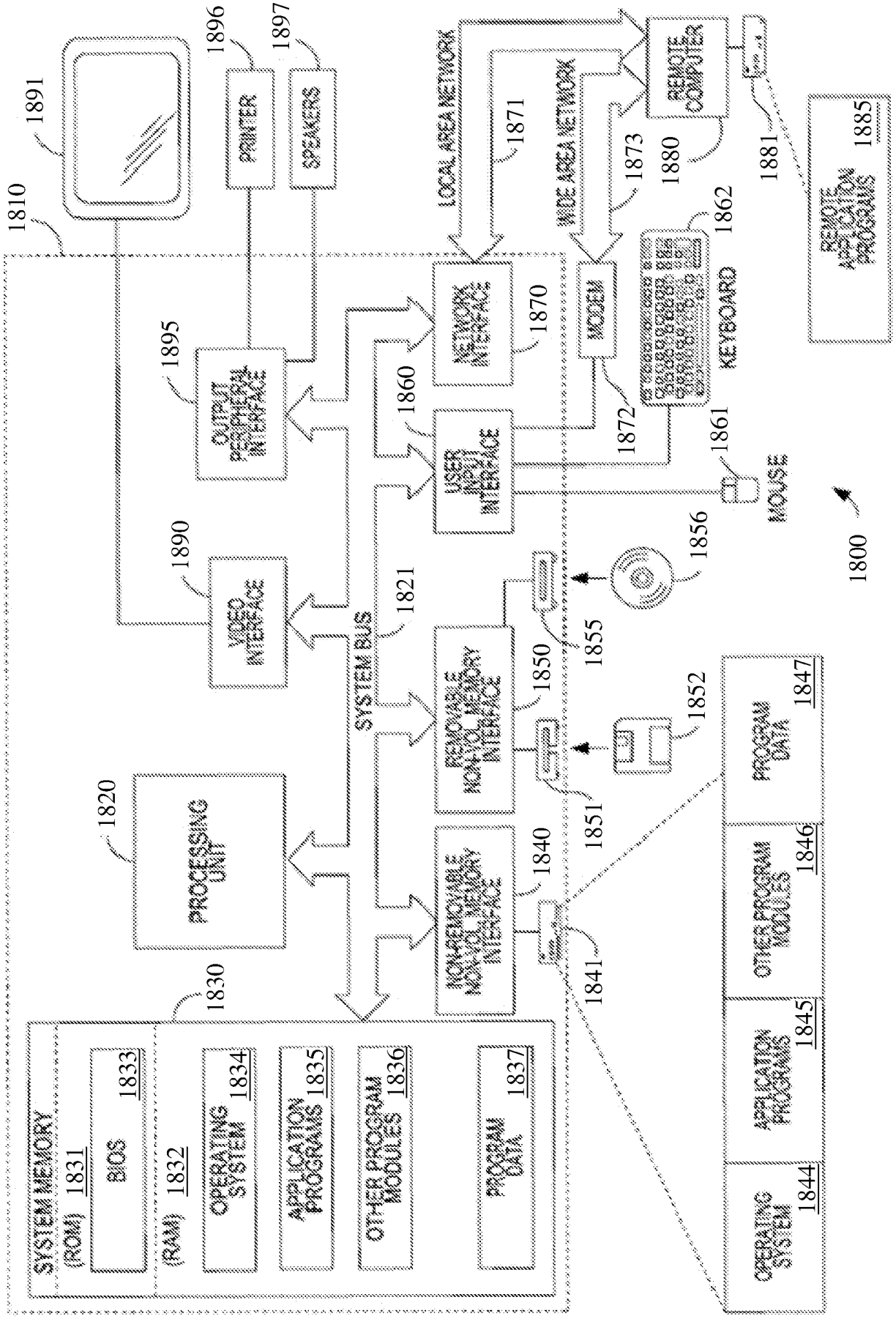
1800
1810
1820
PROCESSING UNIT
1821
SYSTEM BUS
1830
SYSTEM MEMORY
(ROM) 1831
BIOS 1833
(RAM) 1832
OPERATING SYSTEM 1834
APPLICATION PROGRAMS 1835
OTHER PROGRAM MODULES 1836
PROGRAM DATA 1837
1840
NON-REMOVABLE NON-VOLATILE MEMORY INTERFACE
1841
1850
REMOVABLE NON-VOLATILE MEMORY INTERFACE
1851
1852
1855
1856
1860
USER INPUT INTERFACE
1861
MOUSE
1862
KEYBOARD
1870
NETWORK INTERFACE
1871
LOCAL AREA NETWORK
1872
MODEM
1873
WIDE AREA NETWORK
1880
REMOTE COMPUTER
1881
1885
REMOTE APPLICATION PROGRAMS
1890
VIDEO INTERFACE
1891
1895
OUTPUT PERIPHERAL INTERFACE
1896
PRINTER
1897
SPEAKERS
OPERATING SYSTEM 1844
APPLICATION PROGRAMS 1845
OTHER PROGRAM MODULES 1846
PROGRAM DATA 1847

Fig. 18