United States Patent [19]

Hayes

[11] 3,870,991

[45] Mar. 11, 1975

[54] TRAFFIC CONTROL SIGNAL APPARATUS

[76] Inventor: **Royce Hayes**, 2785 Shallowford Rd., Chamblee, Ga. 30341

[22] Filed: **Feb. 11, 1974**

[21] Appl. No.: **441,638**

[52] **U.S. Cl.** ..... **340/41 R**, 178/7.8

[51] **Int. Cl.** **G08g 1/095**

[58] **Field of Search** ..... 340/41 R; 178/78

[56] **References Cited**

UNITED STATES PATENTS

3,022,490 2/1962 Dosal 340/41

Primary Examiner—Thomas B. Habecker

Attorney, Agent, or Firm—Jones, Thomas & Askew

[57] **ABSTRACT**

Traffic signal apparatus utilizing cathode ray tubes to provide traffic control signals. The incandescent lamps and color filters associated with the conventional traffic control signal are replaced by a cathode ray tube and associated circuitry connected to emit desired traffic control signal colors, such as red, yellow, and green. A conventional threecolor cathode ray tube can be used, and a divider circuit provides the signals necessary to produce yellow illumination with a conventional cathode ray tube. Other signalling effects, such as directional control arrows, are also provided.

8 Claims, 2 Drawing Figures

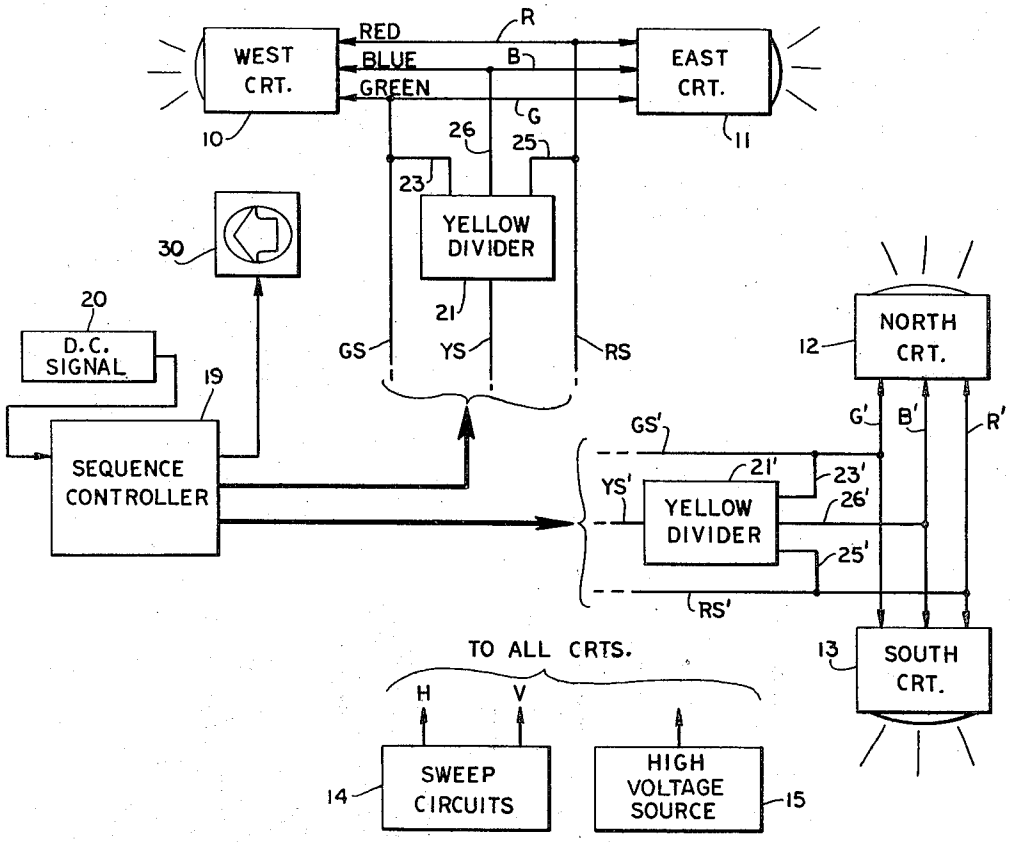

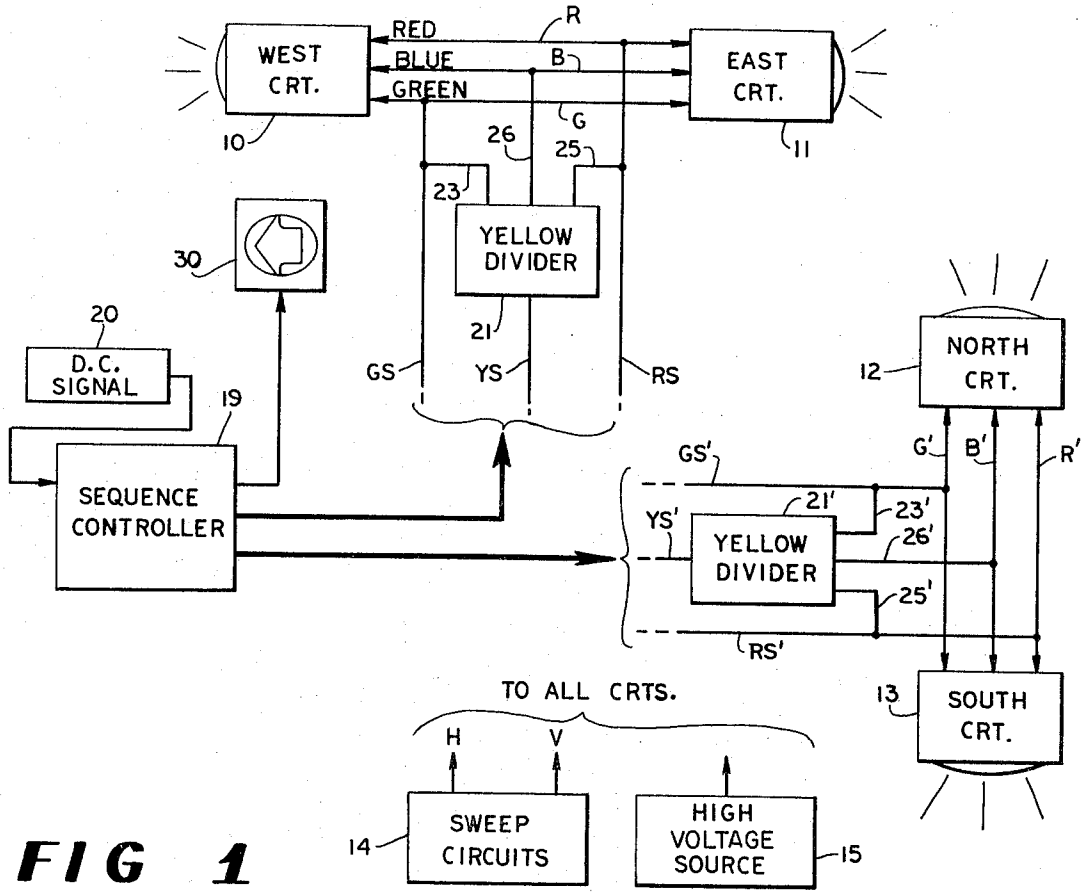
WEST CRT.
10
RED
BLUE
GREEN
R
B
G
EAST CRT.
11
26
25
23
YELLOW DIVIDER
21
30
20
D.C. SIGNAL
19
SEQUENCE CONTROLLER
GS
YS
RS
NORTH CRT.
12
G'
B'
R'
GS'
21'
23'
YS'
YELLOW DIVIDER
26'
25'
RS'
SOUTH CRT.
13
TO ALL CRTS.
H
V
SWEEP CIRCUITS
14
HIGH VOLTAGE SOURCE
15

FIG 1

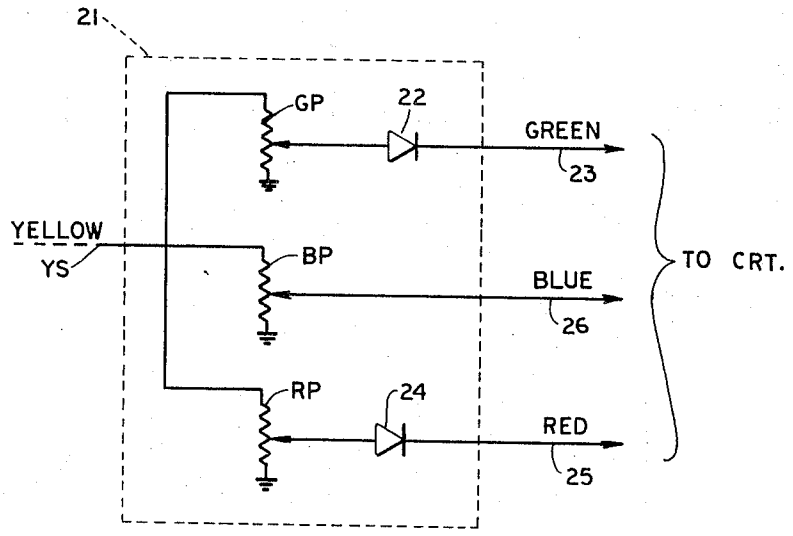
21
GP
22
GREEN
23
YELLOW
YS
BP
BLUE
26
TO CRT.
RP
24
RED
25

FIG 2

TRAFFIC CONTROL SIGNAL APPARATUS

This invention relates in general to signalling apparatus and in particular to a traffic control signal apparatus.

The control of vehicular and pedestrian traffic is almost universally accomplished by way of the well-known and conventional traffic control signal which consists of a separate signal unit comprising a lamp housing, reflector, lamp, and colored lens for each separate color signal, directional arrow, or other traffic control message. Each of the individual lamps is connected to a sequence controller in an operating circuit typically including a timing device and switching devices, so that the lamps are individually operated in a predetermined and repetitive sequence which provides a desired traffic control signal pattern. The basic concept of this type of conventional traffic control signal has been known and used for many years.

Notwithstanding the widespread acceptance of the conventional traffic control signal, these prior-art signals have several practical disadvantages. Since each desired type of signal, such as each of the three basic colors (red, yellow, green), direction arrows, and the like requires a separate complete optical projection signal unit, a typical heavily-traveled urban intersection with special traffic control functions such as timed left-only or right-only times, along with the three basic traffic control signals, can require a composite traffic signal that may include eight or more separate signal units for each direction of traffic flow to be controlled. Furthermore, any change in the desired traffic control signal requires a change in at least the lens and/or color filter assembly of one or more signal units.

Since conventional traffic control signals use incandescent lamps, the intensity of illumination emanated by conventional traffic control signals is generally non-variable and necessarily represents a compromise of possibly different levels of optimum illumination which might be required during nighttime, during normal daytime operation, and during daytime operation at hours when ambient lighting conditions would tend to wash out the illumination from the signal.

Accordingly, it is an object of the present invention to provide an improved traffic control signal apparatus.

It is another object of the present invention to provide traffic control signal apparatus which can provide a plurality of control signals emanating from a single signal unit.

Other objects and many of the attendant advantages of the present invention will become more readily apparent from the following description of a preferred embodiment, including the drawing in which:

FIG. 1 shows a schematic diagram of a disclosed embodiment of traffic control signal apparatus according to the present invention; and

FIG. 2 shows a schematic diagram of a color divider circuit used in the embodiment of FIG. 1.

Stated in general terms, the traffic control signal of the present invention comprises a cathode ray tube of the type which selectively emits various colors in response to appropriate input control signals. A cathode ray tube is positioned to emit illumination which is observable in a field of view including vehicular, pedestrian, or other traffic to be controlled, and the cathode ray tube is supplied with appropriate signals necessary to generate the desired illumination colors or other signals.

The present invention is more readily understood with reference to the disclosed embodiment of the invention, as shown in FIGS. 1 and 2. The term "CRT," as used herein, shall be understood to be an abbreviation of "cathode ray tube," and refers to a multiple-color cathode ray tube of the type which is selectively operable to provide either individual primary colors by activation illumination of selected color phosphors, or to produce additive colors resulting from simultaneous activation of two or more color phosphors.

The disclosed example as shown in FIG. 1 provides traffic control signal apparatus for a four-way controlled intersection, and so four separate traffic control signals are required to provide control signal information along each of the travel directions. The actual signal display portion of the apparatus is depicted in FIG. 1 as the west CRT **10**, the east CRT **11**, the north CRT **12**, and the south CRT **13**. Each of these four designated CRTs includes a CRT mounted within weatherproof housing suitably positioned at the controlled intersection; each CRT is provided with control yokes and associated circuitry necessary for operation of a CRT. Each of the CRTs is connected to receive horizontal and vertical sweep signals from the sweep circuits indicated generally at **14**, and each CRT also receives high voltage from the high voltage source **15**. The sweep circuits, high voltage source, and associated interconnections with the several CRTs is conventional and in accordance with television practice, for example, and is well-known to those skilled in the art.

The CRTs used in the disclosed embodiment are threecolor CRTs of the well-known type which contain phosphors for the primary colors red, blue, and green. Each CRT can be operated to emit any one of these three primary colors, in response to a control signal applied to the electron gun associated with the desired color phosphor, and additive secondary colors can be provided by signals which simultaneously energize two or three of the electron guns in selected intensities.

The red electron guns of the west CRT **10** and the east CRT **11** are connected together by the red signal line R. The blue electron guns and the green electron guns of the CRTs **10** and **11** are similarly interconnected by respective lines B and G. It will also be seen that the corresponding electron guns of the north CRT **12** and the south CRT **13** are interconnected by the red line R′, the blue line B′ and the green line G′.

The electron gun of a conventional CRT operates to emit a stream of electrons directed to energize a particular color phosphor, in response to application of a control signal to the electron gun. The intensity of the electron stream, and thus the intensity of the illumination produced by the phosphor, is a function of control signal amplitude. It will be understood that each of the paired CRTs in FIG. 1, such as the west CRT **10** and the east CRT **11**, is operated to emit a green signal by the application of an appropriate DC control signal to the green signal line GS, connected to the line G. Each of the paired CRTs **10** and **11** display red illumination, in a similar manner, in response to a DC control signal applied to the red signal line RS. The green signal line GS and the red signal line RS, along with a yellow signal line YS, are connected to the sequence controller **19** and the DC signal source **20**. The sequence controller **19** can be any clock-operated switching device which provides a switched circuit corresponding to each traffic control color (as well as turn arrows or other func-

tions) in a predetermined repetitive sequence of operation. It will be understood by those skilled in the art that the function of the sequence controller **19** is substantially the same as the function of a sequence controller used in conventional traffic control signal apparatus. Whereas the sequence controllers used with conventional traffic control signals typically close switches that are connected in circuit to supply 115 VAC power to an incandescent lamp associated with a particular traffic control function, the sequence controller **19** receives the aforementioned DC control voltage from the source **20** and, in response to the desired predetermined traffic control circuits, closes switches which apply the DC control signal to the green signal line GS, the yellow signal line YS, or the red signal line RS.

The sequence controller **19** is also connected to the green signal line GS', the yellow signal line YS', and the red signal line RS' associated with the north-south paired CRTs **12** and **13.**

Those skilled in the art will recognize that yellow illumination is provided by simultaneous operation of the red, blue, and green electron guns of a conventional CRT as used in the disclosed embodiment. The aforementioned simultaneous three-color operation is preferably provided in response to a single yellow-control signal provided by the sequence controller **19** along the yellow signal line YS. Whereas the green signal line GS and the red signal line RS are respectively connected directly to lines G and R associated with the green and red electron guns of the CRTs, the yellow signal lines YS and YS' are connected to yellow divider circuits **21** and **21'**, respectively.

An embodiment of a yellow divider circuit **21** is shown in FIG. **2,** and includes three potentiometers which are connected in parallel to receive the yellow control signal supplied from the sequence controller **19** on the yellow signal line YS. Each of the potentiometers is individually adjustable to provide an output signal which is supplied to one of the electron guns of the paired CRTs. The green potentiometer GP is connected through the diode **22** and the line **23** to the green signal line GS. The red potentiometer RP is similarly connected through a diode **24** and the line **25** to the red signal line RS. The blue potentiometer BP is connected by the line **26** directly to the blue electron gun line B interconnecting the west and east CRTs **10** and **11.** Primed referenced numerals are used with the north-south CRT pair **12** and **13** to designate corresponding lines having corresponding connections.

The three color potentiometers GP, BP, and RP associated with the yellow divider **21** are adjusted so that the signals supplied along the lines **23, 26,** and **25** to the green, blue, and red electron guns of the CRTs are the signals required to produce the desired hue and intensity of yellow illumination from the CRTs. It will thus be seen that a yellow control signal supplied by the sequence controller **19** along the line YS causes the west and east CRTs **10** and **11** to receive control signals which result in the provision of yellow "caution" illumination by such CRTs. The diodes **22** and **24** prevent unwanted current flow through the corresponding potentiometers GP and RP at times when the sequence controller is applying a color control signal along either the lines GS or RS. It will also be seen that any change or adjustment in the level of the signal applied along the line YS to the yellow divider **21** is equally applied to the three color potentiometers in the yellow divider, with the result that the electron guns receive individual signals which are unchanged in relative intensity. Thus, a change or fluctuation in the level of the yellow control signal applied along the yellow signal line YS does not alter the color provided in response to the yellow control signal.

It has been mentioned herein that the present invention can be used with special-purpose traffic signals in addition to the conventional red-yellow-green traffic control signals. An example of a special-purpose traffic control signal is shown at **30** in FIG. **1,** where a left-turn arrow signal is selectively illuminated in response to a signal from the sequence controller **19.** It will be understood that the special-purpose signal **30** can be provided by an additional CRT, and that the configuration of the left-turn arrow or an alternative signal can be provided on the face of the CRT in a number of ways. For example, the CRT may be constructed to have phosphor only in the outline of an arrow or other special signal. Alternatively, a conventional CRT can be used in combination with a mask overlying the CRT face and containing a cut-out in the shape of the arrow or other feature. Further alternatively, the arrow or other special feature can be generated electronically by a special-effects generator (not shown) connected in circuit with the control signal from the sequence controller **19.** Such special effects generators are well known to those skilled in the art of television, and operate to produce signals generating a variety of stationary or animated images on a CRT. The special-purpose signal **30** can be operated to provide either only a single color of illumination or plural colors. For example, it may be desirable to operate the special-purpose signal **30** to provide a turn arrow which is initially green, and which subsequently becomes yellow to denote the impending termination of the turn signal condition. The yellow color operation of the special-purpose signal **30,** if desired, can be provided by a yellow divider circuit similar to circuit **21,** described hereinabove. It will be understood that CRTs having red, yellow, and green color phosphors can be substituted for the conventional red-blue-green CRTs used in the foregoing illustrative example of the present invention, and that no yellow divider circuit will be required with such substitute CRTs.

It will be understood that the foregoing refers only to a disclosed preferred embodiment of the present invention, and that numerous alterations and modifications may be made therein without departing from the spirit and the scope of the invention as set forth in the following claims.

What is claimed is:

1. Traffic control signal apparatus, comprising:

CRT means positioned in signal display relation to a traffic path and selectively operative to emit a plurality of colors in response to input signals; and

sequence control means operatively connected to supply said CRT means with input signals to provide certain traffic control colors in predetermined repetitive sequence.

2. Apparatus as in claim **1,** wherein:

said CRT emits a first desired color in response to a first input signal, emits a second desired color in response to a second input signal, and emits a third desired color in response to concurrent first and second input signals and a third input signal;

said sequence control means selectively provides a predetermined repetitive sequence of first, second, and third color control signals corresponding to said first, second, and third desired colors;

first circuit means connected to supply said first color control signal to said CRT means as said first input signal;

second circuit means connected to supply said second color control signal to said CRT means as said second input signal; and

third circuit means responsive to said third color control signal and operative to supply first, second, and third input signals to said CRT means.

3. Apparatus as in claim **2,** wherein:

said third circuit means includes first and second signal adjusting means each connected to receive said third color control signal and each operative to provide an adjustable signal;

first means connecting said first adjustable signal to said CRT means as said first input signal; and

second means connecting said second adjustable signal to said CRT means as said second input signal.

4. Apparatus as in claim **3,** further comprising:

unidirectional circuit means connected in each of said first and second means to isolate said first and second signal adjusting means from the color control signals applied to said first and second circuit means by said sequence control means.

5. Apparatus as in claim **3,** further comprising:

third signal adjusting means connected to receive said third color control signal and operative to provide a third adjustable signal, and third means connecting said third adjustable signal to said CRT means as said third input signal.

6. Traffic control signal apparatus comprising:

CRT means positioned in signal display relation with respect to traffic being controlled, said CRT means being operable to selectively emit a plurality of distinctive color signals in response to corresponding signal conditions;

control circuit means selectively operative to supply said CRT means with signal conditions operative to provide the corresponding colors; and

sequence control means operatively connected with said control circuit to apply said signal conditions to said CRT means in a certain predetermined repetitive sequence.

7. Apparatus as in claim **6,** wherein:

said CRT means includes a color phosphor and a phosphor energizing means corresponding to each of said plural color signals; and

said control circuit is operative in response to said sequence control means to provide a signal condition only to the phosphor energizing means associated with the desired color signal.

8. Apparatus as in claim **6,** wherein:

said CRT means includes a first phosphor and a second corresponding to two of said plural distinctive colors, a third phosphor not corresponding to any of said plural distinctive colors, and a phosphor energizing means corresponding to each of said three phosphors;

said control circuit means is selectively operative in response to said sequence control means to provide a first signal condition operating only the phosphor energizing means of said first phosphor, a second signal condition operating only the phosphor energizing means of said second phosphor, and a third signal condition operating the phosphor energizing means both of said third phosphor and of at least one of said first and second phosphors in proportion to provide a third distinctive color.

* * * * *