June 25, 1946. W. A. MILLER 2,402,917

ELECTRONIC SWITCH

Filed June 19, 1942

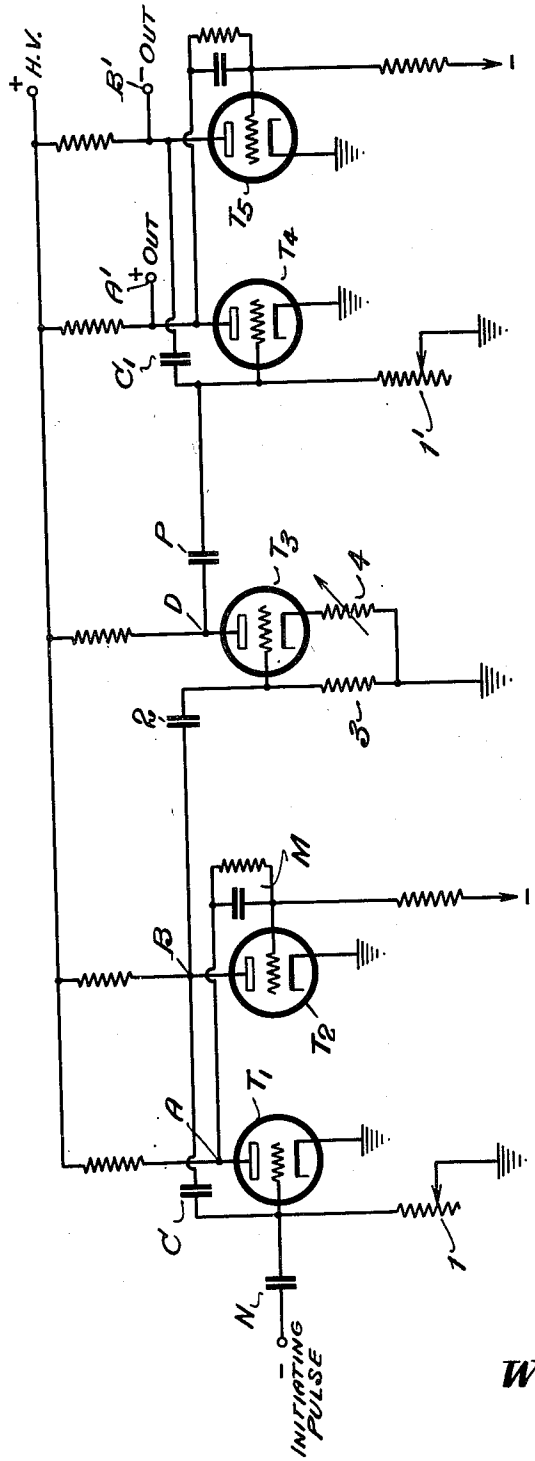

INVENTOR
William A. Miller
BY H. S. Grover
ATTORNEY

Patented June 25, 1946

2,402,917

UNITED STATES PATENT OFFICE

2,402,917

ELECTRONIC SWITCH

William A. Miller, Port Jefferson Station, N. Y., assignor to Radio Corporation of America, a corporation of Delaware

Application June 19, 1942, Serial No. 447,633

13 Claims. (Cl. 178—44)

1

The present invention relates generally to improvements in time delay circuits.

The primary object of the present invention is to provide an electronic circuit furnishing an output pulse of controllable time duration and which starts a controllable time later than an input pulse.

A description of the invention follows in conjunction with a drawing whose single figure illustrates, by way of example only, one embodiment of the invention.

In the drawing, vacuum tubes T_1, T_2 and T_4, T_5 comprise two similar trigger circuits coupled together by a coupling vacuum tube T_3. The grids of the two tubes of each trigger circuit are biased unsymmetrically as shown, one grid having a negative bias applied thereto while the other grid has an adjustable resistor connected to ground. In each trigger circuit the anode of each tube is cross-coupled to the grid of the other tube of the same trigger so that the circuit has only one stable operating point, namely, one tube drawing maximum, the other drawing minimum plate current. The circuit is thus an unbalanced trigger in whose operation there is a predetermined maximum anode current flow in one of the tubes and a predetermined minimum anode current flow in the other tube, or the reverse, the change being controlled by a pulse of desired potential applied to the grid of one of the tubes. Generally stated, this type of trigger has only one degree of electrical stability, and is tripped from the stable to the active state by an applied pulse of suitable polarity and magnitude. The trigger will restore itself to the normal or stable state after a time interval in the active state depending upon the time constants of the circuit elements.

Referring to the trigger circuit composed of tubes T_1 and T_2, for example, the anode of T_1 is coupled to the grid of T_2 through a resistor and condenser combination M, while the anode of T_2 is coupled to the grid of T_1 through a condenser C. The anodes of the tubes receive their positive polarizing potentials from a source of high voltage direct current labeled H. V. The input circuit which provides the initiating pulse is coupled to the grid of T_1 through a condenser N. The biases on tubes T_1 and T_2 are such that normally, in the absence of an initiating pulse of negative polarity, tube T_1 is conductive and tube T_2 non-conductive.

The application of a negative impulse to condenser N will impress a negative pulse on the grid of tube T_1 which causes a change in the

2

anode current of tube T_1 and simultaneously therewith a change in the anode potential of this same tube. This same change is immediately augmented by the consequent changes in the grid and anode potentials on the tube T_2. The reason for this follows: A decrease in the anode current of T_1 caused by the application of a negative potential to the grid of T_1 will place a positive bias on the grid of T_2 thus causing current to flow in tube T_2. The flow of current in T_2, in turn, will cause a lowering of the voltage on the anode of T_2, as a result of which the condenser C will be charged negatively, and the current through tube T_1 will be further decreased until current saturation of tube T_2 is reached, at which time tube T_1 will be non-conducting and tube T_2 conducting. This condition is the active or unbalanced state and obtains as long as the negative charge remains on condenser C. The length of time the charge remains on condenser C is determined by the adjustment of resistor I as well as by the value of C. If resistor I is small, the charge on C will leak off rapidly. As a result of the foregoing action of tube T_1 becoming non-conducting and tube T_2 becoming conducting, a condition the reverse of that previously existing, there will be a positive potential pulse on point A and a negative potential pulse on point B.

When the charge on condenser C has leaked off, the tube T_2 will again become non-conducting and the tube T_1 conducting, thus restoring the trigger circuit to its original condition of stability. The value and adjustment of resistor I will determine the time it takes tubes T_1 and T_2 to be restored to the normal condition of stability in which T_1 is conducting and T_2 non-conducting, and determines the time delay between the initiating pulse and the beginning of operation of the trigger circuit T_4, T_5 which is coupled to the first trigger circuit T_1, T_2 through tube T_3.

Tubes T_4 and T_5 work in the same general way described above for tubes T_1 and T_2. Normally, tube T_4 is conductive and tube T_5 non-conductive, and the presence of a negative pulse on the grid of tube T_4 will change this condition of stability. The output terminals A' and B' in the trigger circuit T_4, T_5 correspond respectively to points A and B in the unbalanced trigger circuit T_1, T_2. Thus, a positive pulse can be derived from A' or a negative pulse from B' for subsequent utilization. The lengths or duration of the pulses appearing at A' and B' are controllable by the adjustment of resistor I'. If the resistor I' is small, the charge built up on C' when the tubes change their conductive states will leak off rapidly.

The coupling vacuum tube T_3 is normally biased to cut-off by means of the resistor 4. The condenser 2 and resistor 3 form a coupling differentiator network. Condenser 2 should have a large reactance while resistor 3 should be small. Because the tube T_3 is normally biased to cut-off, it will pass current only when a positive pulse is applied to its grid. The application of such a positive pulse on the grid of tube T_3 will cause current to flow through this tube as a result of which a negative pulse will appear at point D.

The appearance of a negative pulse at point D will apply, through condenser P, a negative pulse to the grid of tube T_4, thus initiating a cycle of operations in trigger circuit T_4, T_5 similar to that described above for trigger circuit T_1, T_2 when a negative initiating pulse was applied to the grid of T_1.

In the operation of the system as a whole, the application of a negative pulse to condenser N will cause the trigger circuit T_1, T_2 to go through its cycle of operation once. This cycle of operation produces a flat-topped or rectangular wave form pulse whose width may be controlled by the resistor 1. The differentiating of the flat-topped pulse by network 2, 3 produces a sharp positive impulse which operates tube T_3 at the time tube T_2 of the trigger is restored, or flops back, so to speak, to its original non-conducting condition. The current flow in tube T_3 initiates a negative pulse which causes trigger T_4, T_5 to go through its cycle of operation once, as a result of which a positive pulse is available at A' and a negative pulse available at B' for utilization. The duration of these pulses at A' and B' is determined by the adjustment of resistor 1'.

It will thus be noted that resistor 1, in effect, controls the finite time of start of an output pulse available from trigger T_3, T_5, while resistor 1' determines the width, length, or duration of this output pulse. I am thus able to produce at some controllable finite time after initiation of a single impulse, a switching voltage which is sensibly constant over a continuously variable range of time. Both the time of start of the output pulse and the time of extinction are controllable by the operator.

As an illustration of the delay possibilities of the invention, given by way of example only, an initiating pulse of 1 microsecond duration applied to the grid of tube T_1 can produce a pulse of 15 microseconds long for utilization from the anode circuit of either tubes T_3 or T_5. Also, this latter pulse from T_4, T_5, in combination, may easily be delayed by as much as the period of the initiating pulse (i' e., time between pulses); e. g., we could obtain from tubes T_4 and T_5 pulses whose duration is 1 microsecond repeated at a rate of 250 pulses per second, pulses which may have any time duration from 0 to 4000 microseconds with a time delay with respect to the initiating pulse which may be varied, at the will of the operator, over the same range of duration. Thus, the only limitation on the time delay and the duration of the output pulse is that the first circuit must have completed its cycle of operation in time to receive and be acted upon by the succeeding initiating pulse, while the second circuit must have completed its cycle of operation in time to be acted upon by the signal from the first trigger circuit.

Although the trigger circuits have been described as requiring a negative pulse to enable them to go through their respective cycles of operation, it will be understood by any one skilled in the art that the functions of the tubes of each

multivibrator can be inverted to allow the operation to be initiated by a positive input pulse. Further, although the use of the coupling tube T_3 is preferred, it may in some cases be eliminated and the output pulse from the first trigger applied directly through a differentiator to the second trigger.

What is claimed is:

1. In combination, a trigger circuit having a stable condition and an unstable condition and comprising a pair of vacuum tubes, a condenser connected between the grid of one tube and the anode of the other tube, a condenser shunted by a resistor connected between the anode of said last tube and the grid of said first tube, a similar trigger circuit having a stable condition and an unstable condition, a connection including a series condenser for coupling said two trigger circuits in cascade relation, and means for applying an initiating voltage pulse to the grid of one tube of said first trigger circuit of such polarity and magnitude as to change the condition of the first trigger circuit.

2. In combination, a trigger circuit having a stable condition and an unstable condition and comprising a pair of vacuum tubes, a condenser connected between the grid of one tube and the anode of the other tube, a condenser shunted by a resistor connected between the anode of said last tube and the grid of said first tube, means for biasing the grids of said pair of tubes differently, a similar trigger circuit having a stable condition and an unstable condition, a coupling circuit capable of passing pulses of only one polarity connecting the two trigger circuits in cascade relation, and means for applying an initiating voltage pulse to the first trigger circuit of such polarity and magnitude as to change the condition of the first trigger circuit.

3. In combination, first and second trigger circuits each having a pair of vacuum tubes, connections cross-coupling the grids and anodes of the tubes of each trigger circuit, means for unsymmetrically biasing the grids of the tubes of each trigger circuit, each of said circuits having a stable and an unstable condition, a differentiator circuit of a reactance and a resistor in series coupled between one of the anodes of the first trigger circuit and ground, a coupling vacuum tube having its grid connected to the junction of said reactance and resistor and having its anode coupled to the grid of one of the tubes of said second trigger circuit, means for biasing said coupling vacuum tube to cut-off during the stable condition of said first trigger circuit, and means for deriving from said second trigger circuit a voltage developed thereby.

4. In combination, first and second vacuum tube trigger circuits for producing flat top pulses, each of said trigger circuits having a stable and an unstable condition, adjustable elements associated with each trigger circuit for controlling the lengths of said pulses, a connection for applying an initiating voltage pulse to said first trigger circuit of such polarity and magnitude as to change the condition of said first trigger circuit, and means coupling said trigger circuits together in such manner that there is introduced a time lag between the time of occurrence of said initiating pulse and the operation of said second trigger circuit, said means including a condenser and a vacuum tube in series therewith, said vacuum tube being biased to pass pulses of only one polarity.

5. In combination, an electron discharge de-

vice pulse producing trigger circuit having a stable state and an active state, a connection for supplying a unidirectional current tripping pulse of a predetermined polarity and magnitude to said trigger circuit for changing it from its stable to its active state, an electron discharge device normally biased to cut-off, a differentiator circuit coupled between the negative output pulse electrode of said trigger and the input of said discharge device, said differentiator circuit serving to produce a sharp positive pulse from the negative output pulse of said trigger circuit of such magnitude as to overcome the cut-off bias on said discharge device and render it momentarily conductive, whereby only the trailing edge of said negative output pulse is effective to produce said sharp positive pulse in said differentiator circuit, and a utilization circuit coupled to an electrode of said discharge device and responsive to a pulse obtained therefrom.

6. In combination, an electron discharge device pulse producing trigger circuit having a stable state and an unstable or active state, a connection for supplying a unidirectional current tripping pulse of a predetermined polarity and magnitude to said trigger circuit for changing it from its stable to its active state, an electron discharge device normally biased to cut-off, a differentiator circuit coupled between a particular output electrode of said trigger circuit and the input of said discharge device to thereby produce sharp negative and positive impulses in the order named, from the output pulse applied from said trigger circuit, one of said sharp impulses being of such polarity and magnitude as to overcome the cut-off bias on said discharge device and render it momentarily conductive, and a utilization circuit coupled to the anode of said electron discharge device and responsive to a pulse of negative direction obtained therefrom.

7. A time delay circuit furnishing an output pulse of controllable time duration and which starts a controllable time later than an input pulse, comprising an electron discharge device trigger circuit having a stable condition and an unstable condition, said trigger circuit having an adjustable element for controlling the duration of the unstable condition, a connection for supplying an input pulse of negative direction to said trigger circuit of such polarity and magnitude as to change the trigger circuit from its stable to its unstable condition, means for utilizing an output pulse of negative direction produced by said trigger circuit, said means including a differentiating circuit coupled to an output electrode of said trigger circuit, and a vacuum tube normally biased to cut-off coupled to said differentiating circuit and responsive to a positive impulse therefrom for passing current, whereby only the trailing edge of the negative output pulse from the trigger circuit is effective to produce said positive impulse in said differentiating circuit, as a result of which a delay is produced substantially equal in duration to the duration of said output pulse from said trigger.

8. In combination, a first trigger circuit having only one degree of electrical stability, said trigger circuit comprising a pair of electrode structures which are interconnected so that one structure is conductive and the other non-conductive in the stable state, and vice versa in the active state, a connection for supplying an input impulse to said circuit for changing it from the stable to the active or unstable state, and an adjustable element for controlling the duration of the active state, a

second similar trigger circuit, a differentiator circuit coupled between the output of said first trigger circuit and the input of said second trigger circuit, an adjustable element for controlling the duration of the active state of said second trigger circuit, and a connection for deriving from said second trigger circuit a voltage developed therein.

9. In combination, a first electron discharge device trigger circuit having only one degree of electrical stability, said trigger circuit comprising a pair of electrode structures which are interconnected so that one structure is conductive and the other non-conductive in the stable state, and vice versa in the active state, a connection for supplying an input pulse to said circuit for changing it from the stable to the active or unstable state, said circuit having an adjustable element for controlling the time of the active state, a second similar electron discharge device trigger circuit, means including a differentiator circuit of a reactance and a resistor coupling said two trigger circuits together, and an adjustable element in said second trigger circuit for controlling the time of the active state of said second circuit.

10. A time delay circuit comprising first and second self-restoring trigger circuits, each having a pair of vacuum tubes, impedance elements cross-coupling the grids and anodes of the tubes of each trigger circuit, means for unsymmetrically biasing the grids of the tubes of each circuit, each of said circuits having a stable and an active state, a differentiator circuit of a reactance and a resistor in series coupled between one of the anodes of the first trigger circuit and ground, a coupling vacuum tube having its grid connected to the junction of said reactance and resistor and having its anode coupled to the grid of one of the tubes of said second trigger circuit, said coupling tube being responsive to a pulse passed thereto by said differentiator circuit when said first trigger circuit restores itself to the stable state for developing a voltage of such polarity and magnitude as to trip said second trigger circuit to its active state.

11. A time delay circuit comprising first and second self-restoring trigger circuits, each having a pair of vacuum tubes, impedance elements cross-coupling the grids and anodes of the tubes of each trigger circuit, means for unsymmetrically biasing the grids of the tubes of each trigger circuit, each of said circuits having a stable and an active state, each of said trigger circuits having adjustable means for controlling the time duration of the pulses produced thereby, and unilateral conduction means responsive to a pulse produced by said first trigger circuit when it restores itself to its active state for supplying a tripping pulse to said second trigger circuit.

12. In combination, a first electron discharge device trigger circuit having only one degree of electrical stability, said trigger circuit comprising a pair of electrode structures which are interconnected so that one structure is conductive and the other non-conductive in the stable state, and vice versa in the active state, a connection for supplying an input pulse to said circuit for changing it from the stable to the active state, said circuit having an adjustable element for controlling the time of the unstable condition, a second similar electron discharge device trigger circuit, means including a reactance coupling said two trigger ciruits together, said means functioning to product sharp pulses from the

steep wave fronts of the flat pulses produced by said first trigger circuit, and an adjustable element in said second trigger circuit for controlling the time of the active state of said second trigger circuit.

13. An electronic circuit furnishing an output pulse of controllable time duration and which starts a controllable time later than an input pulse, comprising first and second similar electron discharge device trigger circuits each of which has only one degree of electrical stability, each of said trigger circuits comprising a pair of interconnected electrode structures, one structure

in each trigger circuit being conductive and the other non-conductive in the stable state and vice versa in the active state, means including a differentiator coupling said two trigger circuits together in cascade relation, a connection for supplying an input pulse of predetermined polarity to one of said trigger circuits to thereby cause the application at a later time from said trigger circuit of a pulse of the same polarity to the other trigger circuit, and a connection for utilizing a voltage pulse developed by said last trigger circuit.

WILLIAM A. MILLER.