US00D487342S

(12) United States Design Patent

Yewdall et al.

(10) Patent No.: US D487,342 S
(45) Date of Patent: ** Mar. 9, 2004

(54) **PHARMACEUTICAL PRODUCT CONTAINER**

(75) Inventors: **Gary Wayne Yewdall**, Geelong (AU); **Jillian Louise Isabel Mahon**, Northcote (AU); **Paul Murray Malouf**, Airport West (AU); **Mark Simon Bayly**, Eltham (AU); **Peter Kingsley Bayly**, Euroa (AU)

(73) Assignee: **CSL Limited**, Parkville (AU)

(**) Term: **14 Years**

(21) Appl. No.: **29/173,535**

(22) Filed: **Dec. 30, 2002**

(30) **Foreign Application Priority Data**

Jul. 1, 2002 (AU) 1949/02

(51) **LOC (7) Cl.** **03-01**
(52) **U.S. Cl.** **D3/203**
(58) **Field of Search** D3/203, 201, 205, D3/283, 274; D9/341, 448, 347, 339, 416; 206/389, 390; D24/226; D19/67; D28/4, 5, 8, 9, 78, 79; 132/301

(56) **References Cited**

U.S. PATENT DOCUMENTS

D432,267 S * 10/2000 Wardlaw D28/78
D458,016 S * 6/2002 Christianson D3/203
D459,873 S * 7/2002 Stillwell et al. D3/203
D479,016 S * 8/2003 Sgariboldi D28/78

FOREIGN PATENT DOCUMENTS

WO WO 99/59647 11/1999

* cited by examiner

Primary Examiner—Catherine R. Oliver
(74) *Attorney, Agent, or Firm*—Knobbe, Martens, Olson & Bear, LLP

(57) **CLAIM**

The ornamental design for a pharmaceutical product container, as shown and described.

DESCRIPTION

FIG. **1** is a top perspective view of a pharmaceutical product container showing our new design;
FIG. **2** is another top perspective view thereof;
FIG. **3** is a bottom perspective view thereof;
FIG. **4** is another bottom perspective view thereof;
FIG. **5** is a side elevational view thereof;
FIG. **6** is a perspective view with the top shown removed from the body of the container;
FIG. **7** is a bottom perspective view with the lid shown raised from the body of the container;
FIG. **8** is a top perspective view of the container lid;
FIG. **9** is a bottom perspective view of the container lid;
FIG. **10** is a top perspective view of the container body;
FIG. **11** is a perspective view of the container lid; and,
FIG. **12** is a bottom perspective view of the container body.

1 Claim, 12 Drawing Sheets

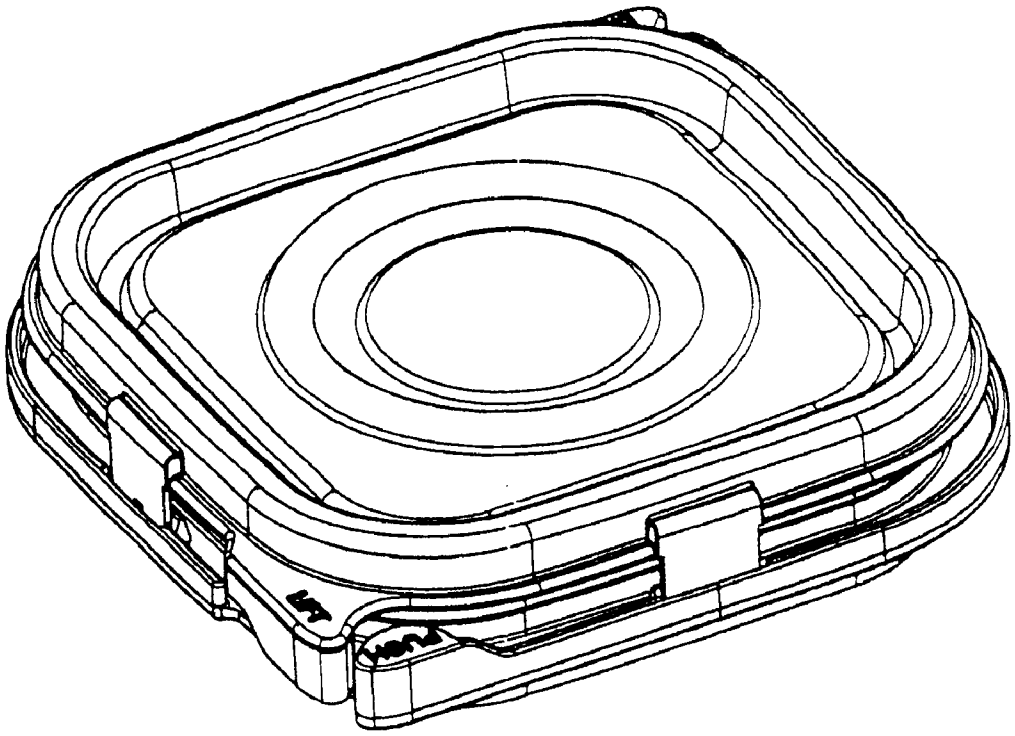

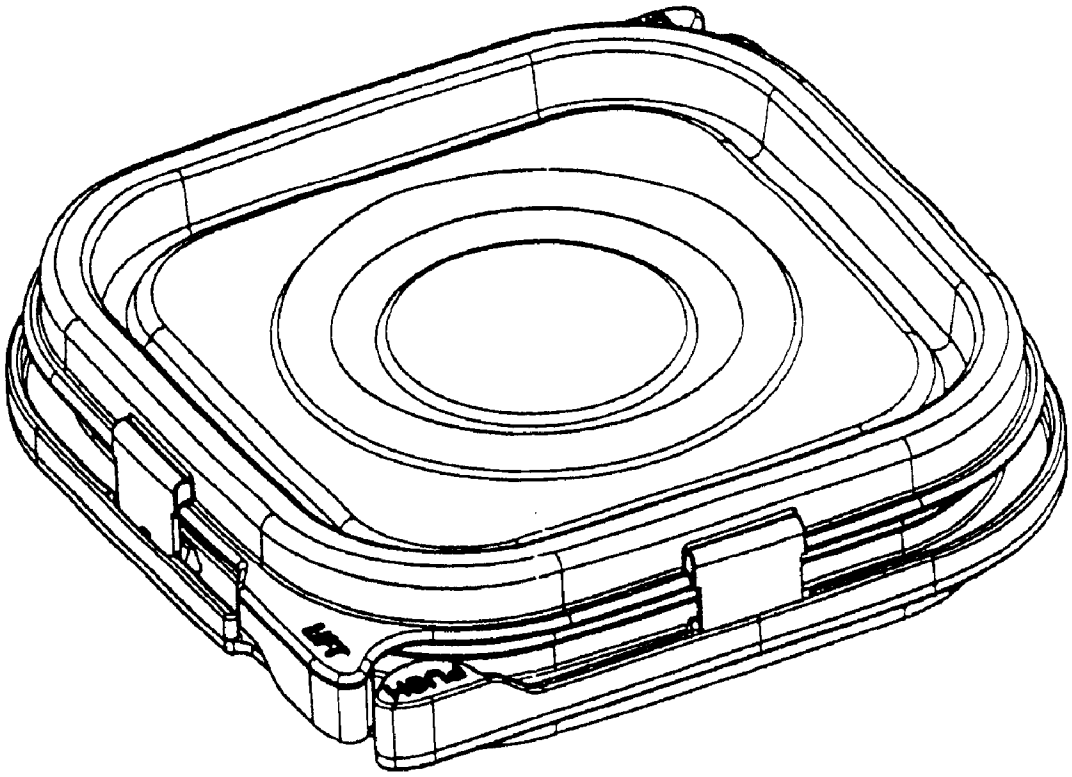

FIGURE 1

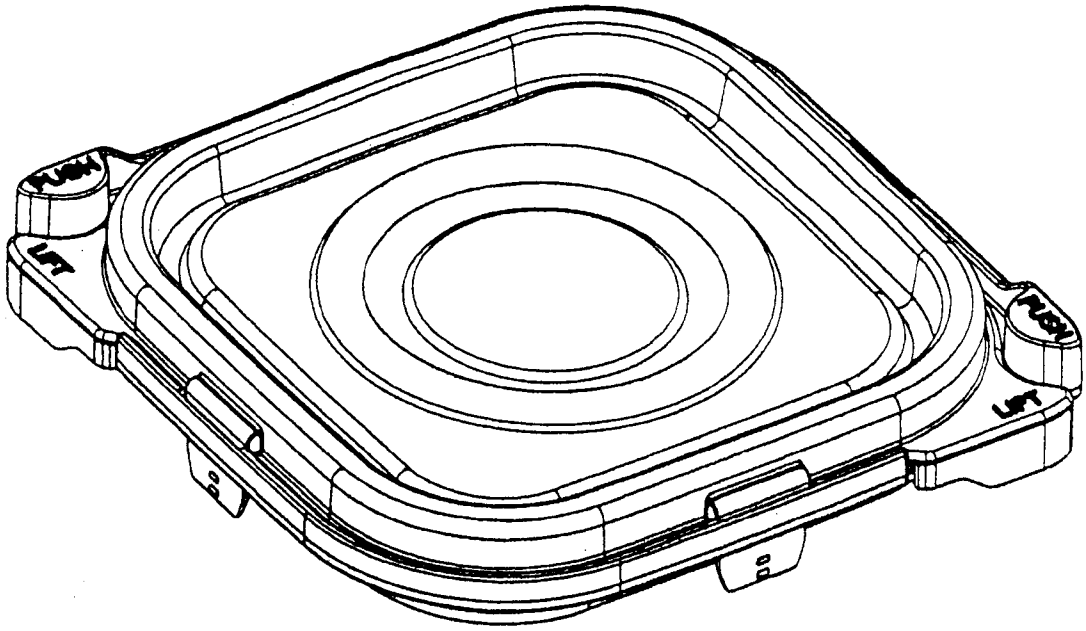

FIGURE 2

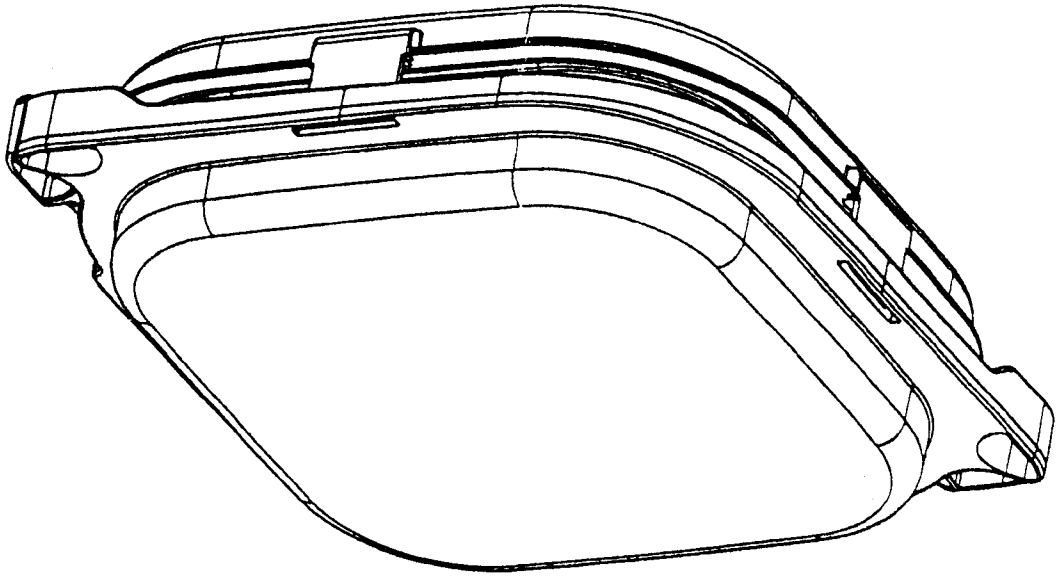

FIGURE 3

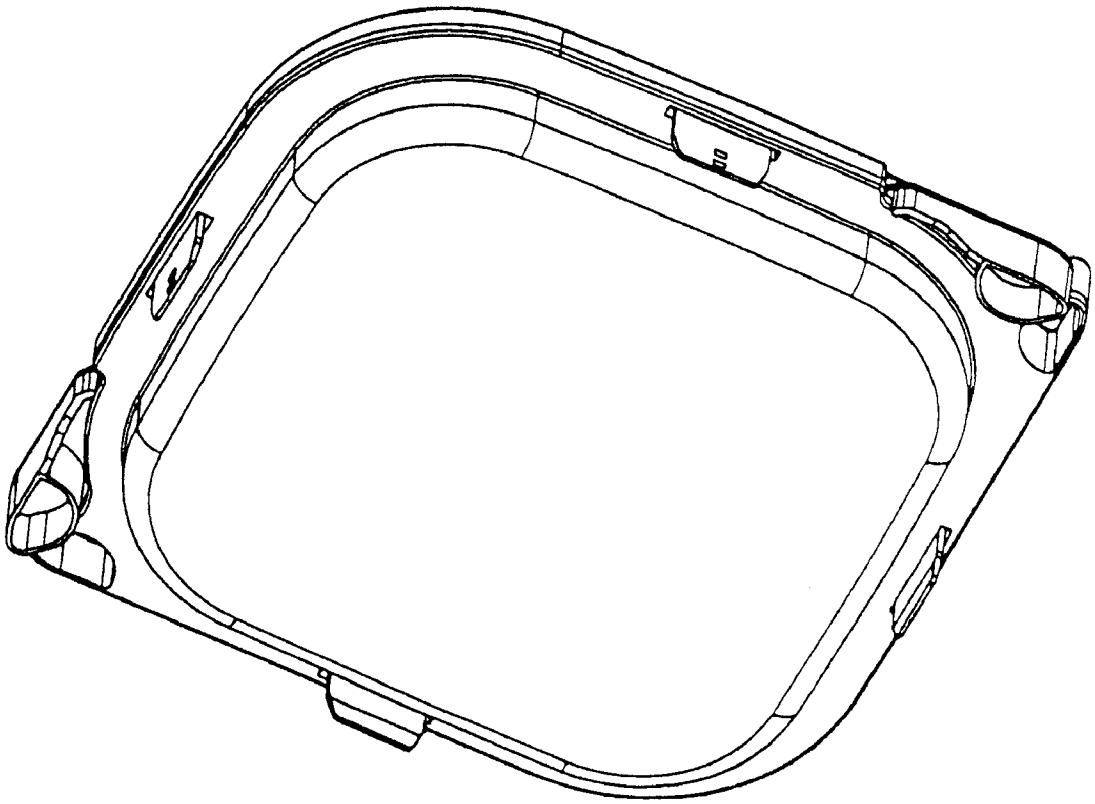

FIGURE 4

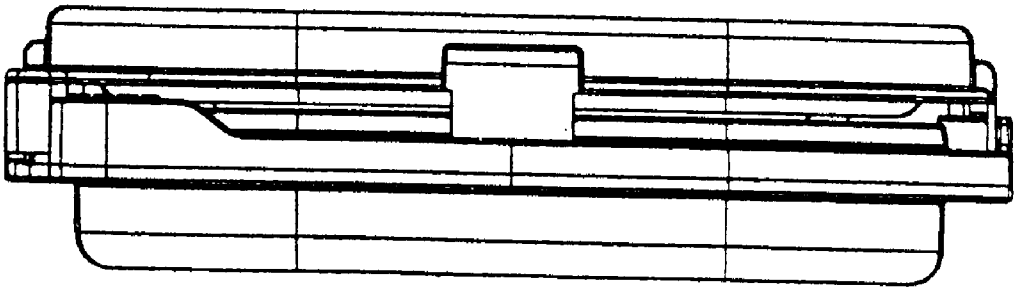

FIGURE 5

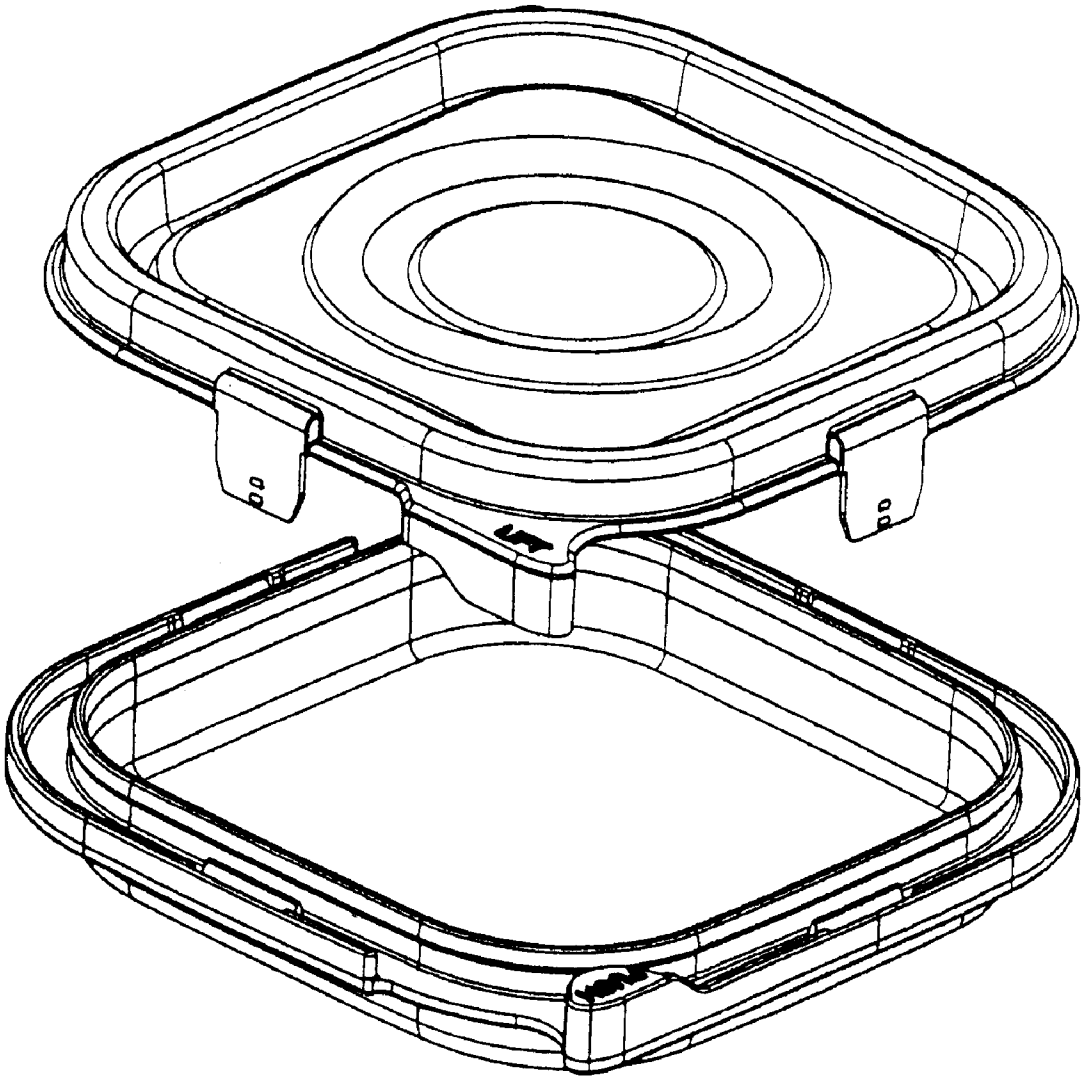

FIGURE 6

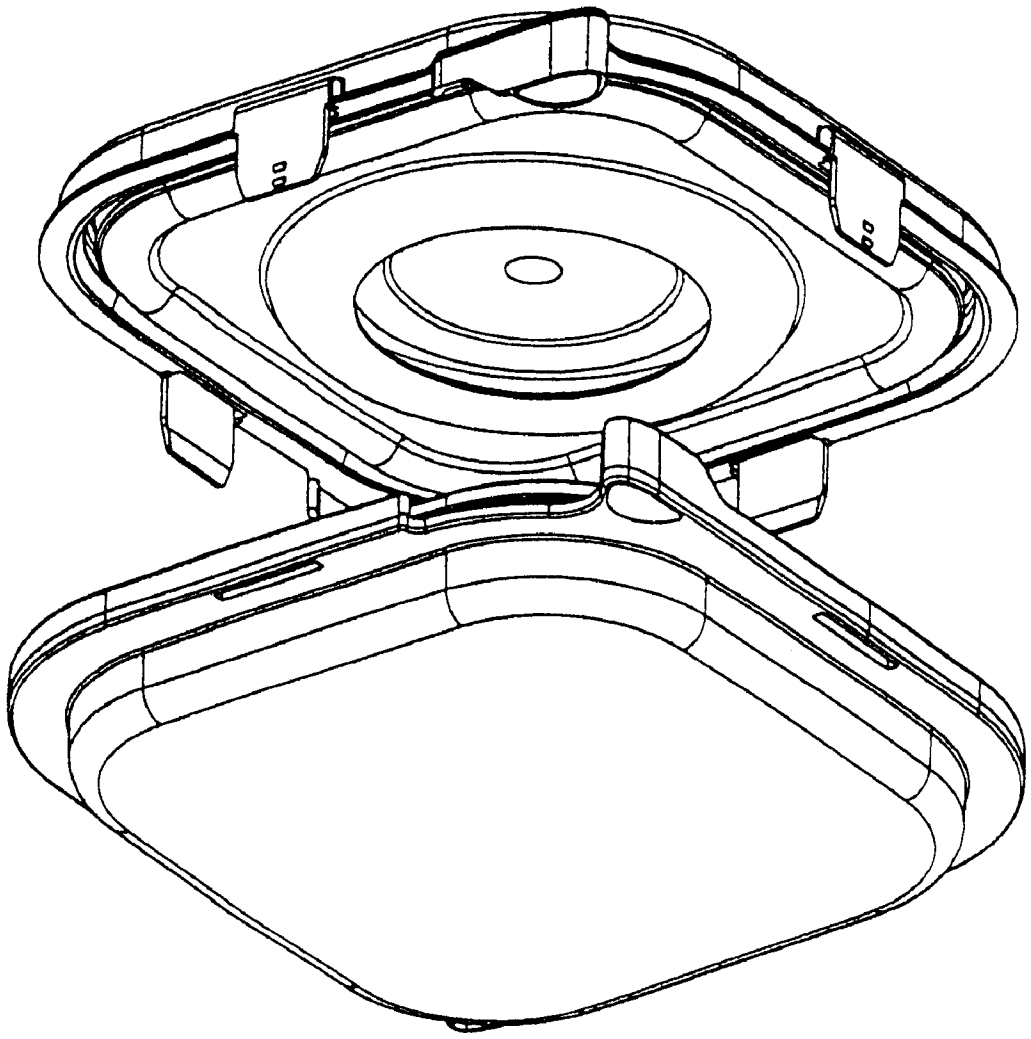

FIGURE 7

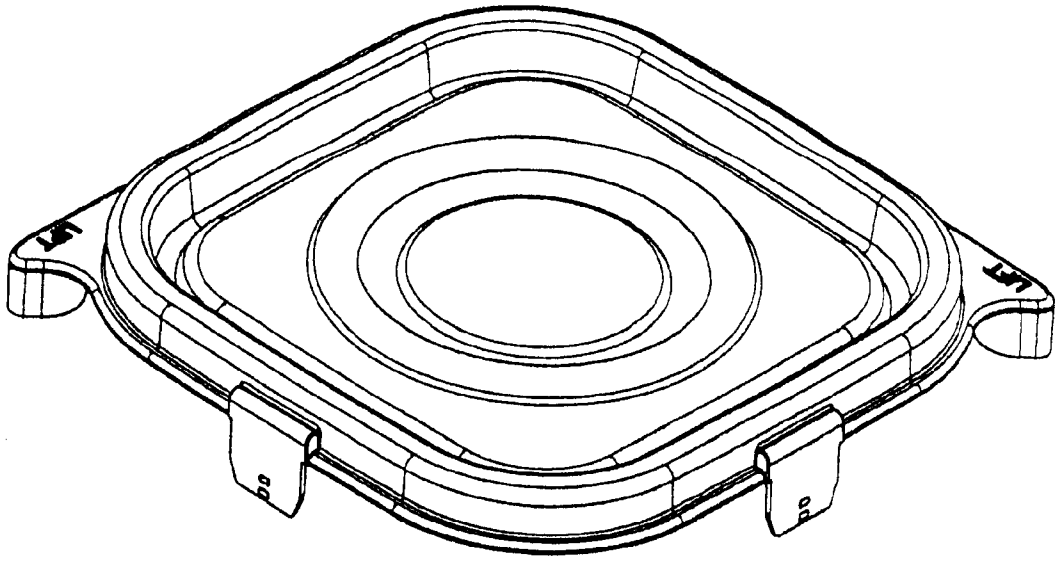

FIGURE 8

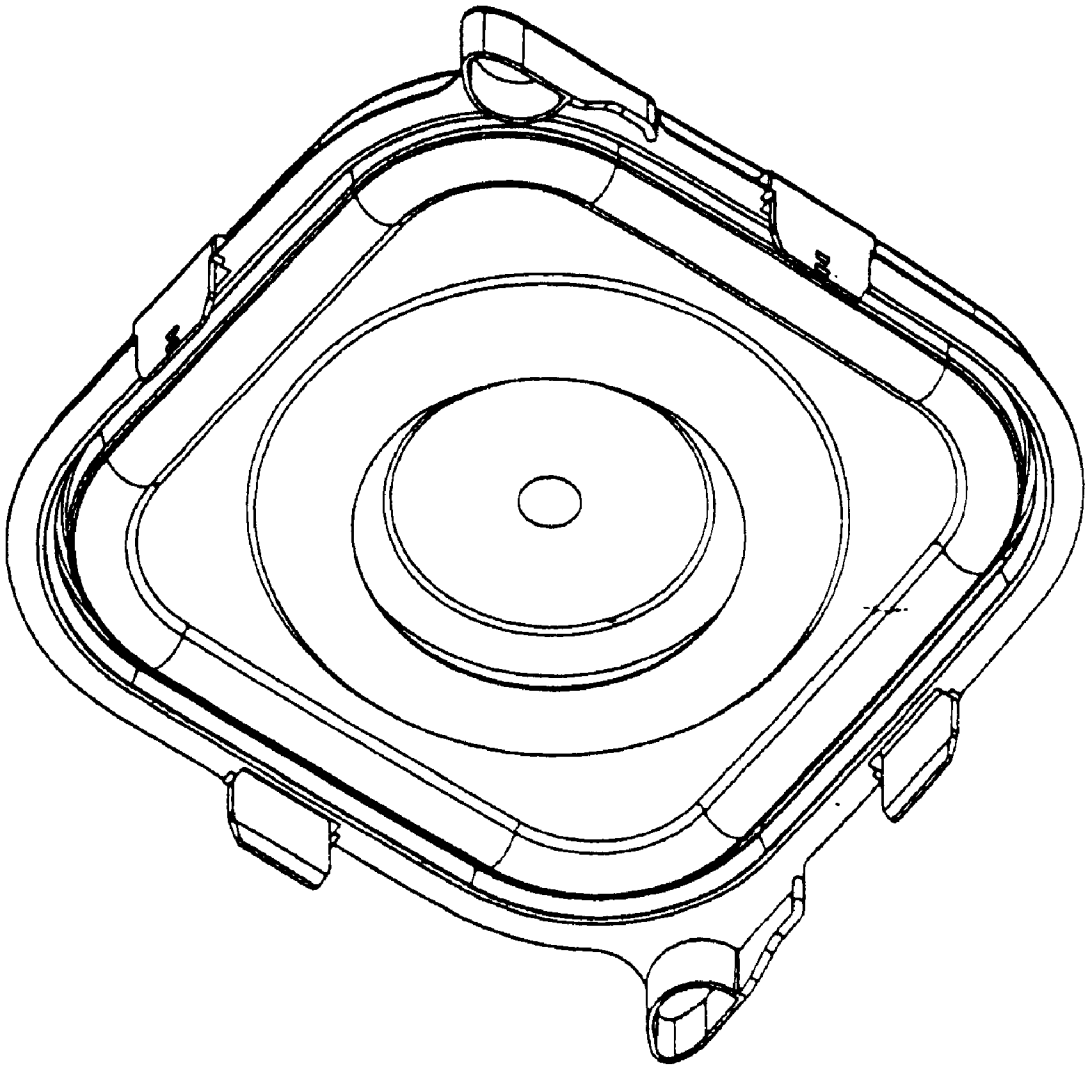

FIGURE 9

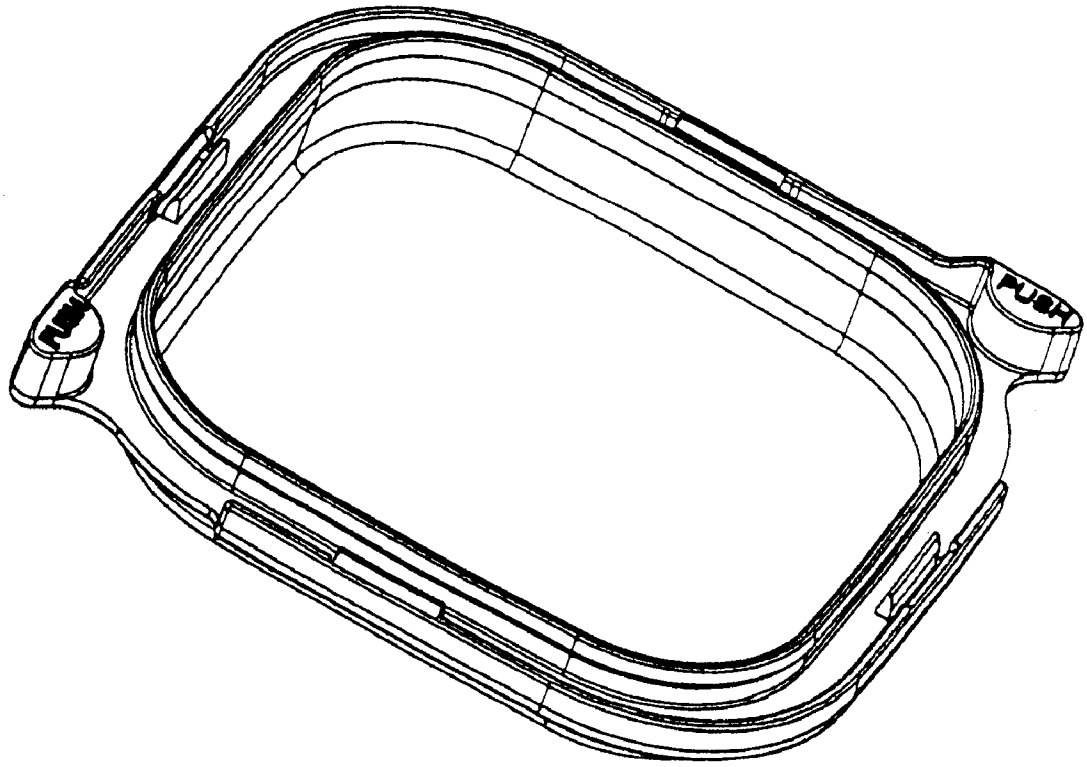

FIGURE 10

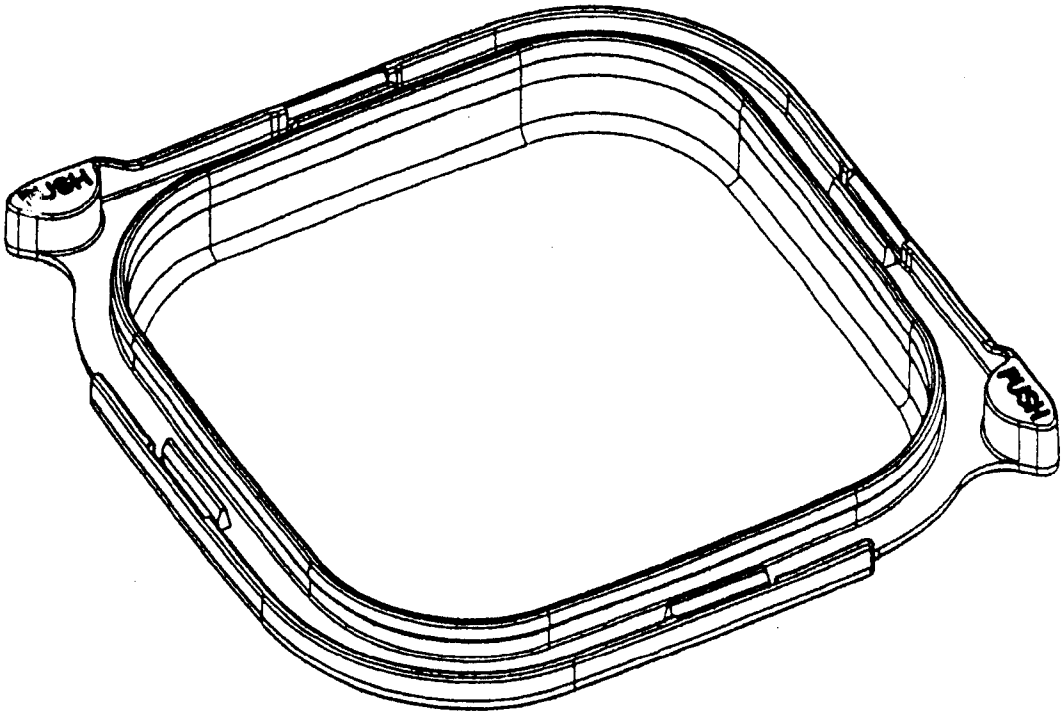

FIGURE 11

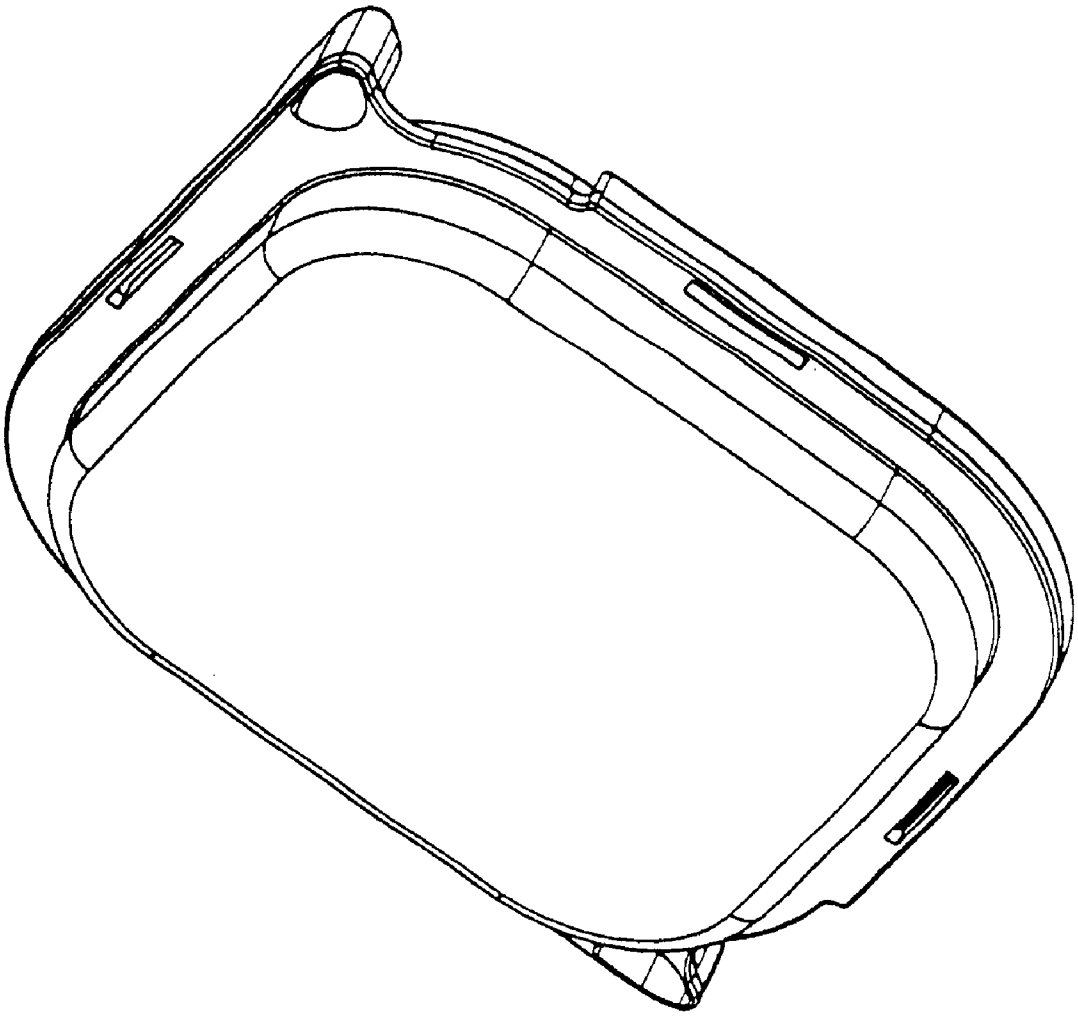

FIGURE 12