Feb. 23, 1937. E. R. NEWCOMB ET AL 2,071,563

ABRADING APPARATUS

Filed May 21, 1934

Fig. 1.

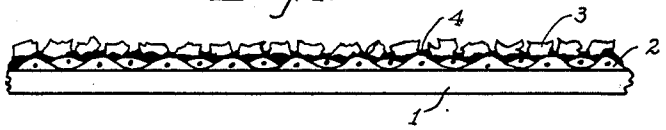

Fig. 2.

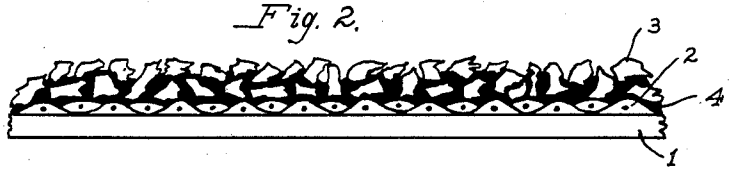

Fig. 3.

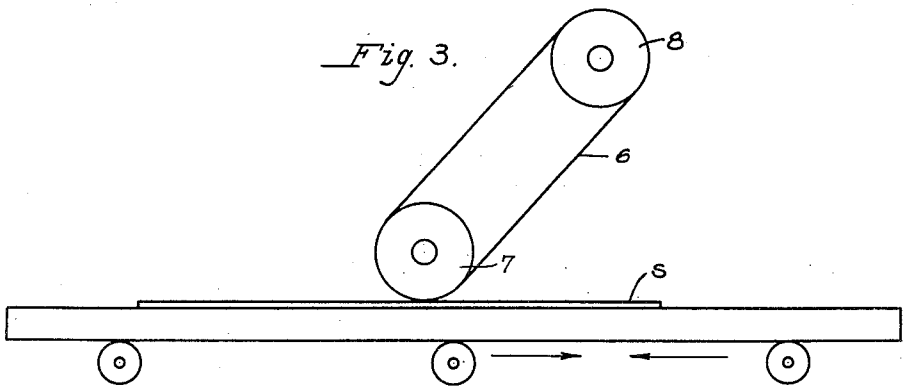

Fig. 4.

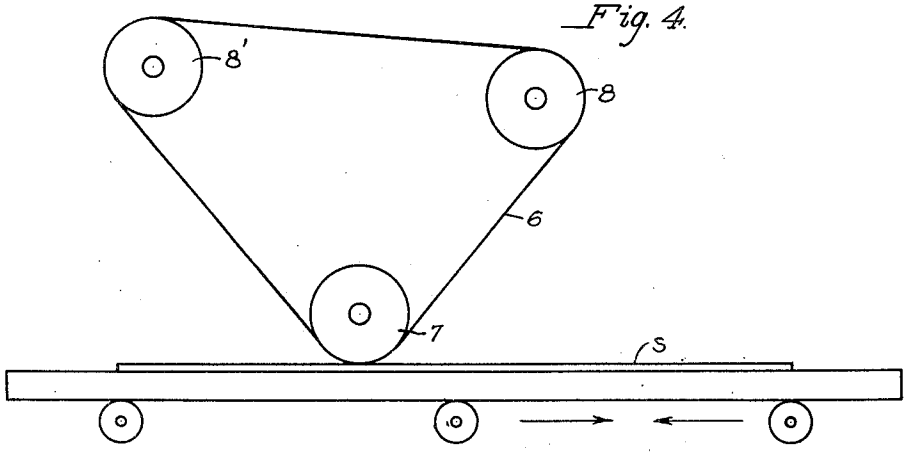

INVENTOR.
EDWARD R. NEWCOMB
HERBERT R. STRATFORD

BY R. C. Bennett

ATTORNEY.

Patented Feb. 23, 1937 2,071,563

UNITED STATES PATENT OFFICE

2,071,563

ABRADING APPARATUS

Edward R. Newcomb, Niagara Falls, N. Y., and Herbert R. Stratford, Cleveland, Ohio, said Newcomb assignor, by mesne assignments, to The Carborundum Company, Niagara Falls, N. Y., a corporation of Delaware, and said Stratford assignor to The Stratmore Company, Cleveland, Ohio, a corporation of Ohio

Application May 21, 1934, Serial No. 726,700

1 Claim. (Cl. 51—188)

This invention relates to apparatus for polishing metal surfaces and particularly to an abrasive belt of novel construction for polishing metal sheets.

The large demand for metal sheets having highly polished surfaces has imposed upon the abrasive industry problems beyond solution by the use of abrasive articles heretofore known.

The demand of the trade is not merely for an abrasive article that will produce surfaces having a high degree of polish and freedom from imperfections but also for an abrasive article that will produce such surfaces quickly and cheaply.

The problem is made more difficult by the fact that the abrasive article required for the production of polished metal sheets must be capable of polishing the full width of stock sheets without relative transverse movement between the sheet and abrasive article. This requirement necessitates an abrasive article capable of performing a delicate operation and at the same time being capable of transmitting an unusually large amount of power because stock widths of sheet metal are thirty-six (36) inches and greater.

The object of the present invention is to overcome the aforesaid difficulties and others attending the polishing of metal surfaces and to provide satisfactory apparatus for the purpose.

We have found that in order to produce a finish of the desired character on the surface of the metal the abrasive article used for the purpose must be such that it will not stretch, or conform to, or assume the shape of, each slight irregularity in the surface being polished, and still not be non-conforming in the manner of a rigid, bonded abrasive, such as the well known abrasive wheel. In other words, the abrasive article must be flexible, as compared with a bonded abrasive wheel, and inflexible as compared with the well known abrasive coated paper and abrasive coated cloth.

We have found, further, that the required stiffness or inflexibility of the article can be obtained best by making the backing member; that is, the member upon which the abrasive particles are attached, inflexible rather than by merely putting an inflexible coating of abrasive on a flexible backing such as paper or cloth.

We have found also that by mounting an abrasive belt with a stiff backing member on a supporting pulley that is somewhat yieldable the combination will yield sufficiently to follow gradual swells and recessions of the metal sheet and still not yield to abrupt elevations and depressions in the metal surface, nor will it yield sufficiently to operate irregularly from side to side when applied to a sheet of stock width.

The belt of the present invention comprises an endless composite backing of stiff and limp materials, and abrasive granules adhesively secured to the limp material. One suitable material for the stiff member of the composite backing is the product known as vulcanized fiber which is structurally strong, non-stretchable and sufficiently inflexible to render the composite backing member rigid enough to bridge over small, adjacent irregularities. The limp member of the composite backing can be cloth of the type used in the manufacture of the ordinary abrasive coated cloth. Such cloth provides good anchorage for the adhesive.

The invention will be further described with reference to the accompanying drawing. In this drawing, which is to be taken as illustrative and not as limiting the invention:

Figure 1 is an enlarged and detailed cross-sectional view of one form of an abrasive belt embodying our invention;

Figure 2 is a similar view showing another form of belt embodying our invention;

Figure 3 is a diagrammatic view in side elevation showing one arrangement of pulleys and belt, in which arrangement the belt of the present invention is particularly advantageously utilized; and

Figure 4 is a view similar to Figure 3 except that it shows an arrangement in which three pulleys are used.

The belt shown in Figure 1 comprises a foundation member 1 of fiber or the like, to which is adhesively attached a fabric layer 2, and a substantially single layer coating of abrasive grains 3 attached to the fabric member 2 by an adhesive 4.

The belt shown in Figure 2 also comprises a foundation member 1, a fabric layer 2 and a coating of abrasive granules 3, but in this case the coating of granules includes more than a single layer of grains.

The backing for each of the belts illustrated in the drawing is made in the same manner; that is, by adhesively attaching the fabric to the fiber. One way of doing this is to coat the fiber with adhesive and then place the fabric upon the glue coating and press the fiber and cloth into intimate contact. It will be understood that this method of building up the backing can be modified without diverging from the present invention.

As shown in the drawing, the abrasive coating of the belt in the present invention can be either

a substantially single layer of granules or a plurality of layers of granules; e. g., two layers as illustrated in Figure 2.

In making the belts of the present invention we prefer to apply the abrasive granules to the composite backing, although it is possible to apply them to the fabric before the latter has been attached to the fiber. We prefer to apply the abrasive granules to the composite backing because of several reasons that will be obvious to those skilled in the art, but among which reasons are the greater ease of handling the fabric before it is coated with granules and the less danger of injuring the abrasive surface through handling and operating upon the fabric.

When the abrasive coating has been applied, and the adhesive set, a belt of the desired length is made by joining the ends of a strip in any desired manner to provide a joint that will be no more stretchable than the belt is at any other section.

The substantially single layer of abrasive granules can be applied in the usual manner employed for making coated abrasive articles. In making the multi-layer belt, however, we apply only sufficient adhesive, such as glue, to attach a single layer of granules and then apply a thinner coat of adhesive over the first layer of granules to adhesively grip the second layer of granules. If more than two layers of granules are to be applied the operation is repeated; that is, other coatings of the thinner adhesive and granules are applied, with a final coating of abrasive granules.

The belt having a plurality of layers of abrasive granules has certain advantages over the one having a substantially single layer of granules. One advantage is that of extra long service, since the backing will outlast a single layer of abrasive granules. A more outstanding and surprising advantage of the belt with a plurality of abrasive layers is that the abrasive portion is sufficiently elastic, because of the gradation of adhesive from the backing outwardly, to substantially eliminate cracking and shelling off of the granules as is the case when a thick abrasive belt is run around relatively small pulleys.

The new belt is particularly adapted for use in connection with apparatus of the type illustrated in Figures 3 and 4. Referring to Figure 3, a sheet of metal S is engaged by the abrasive belt 6 arranged about the pulleys 7 and 8 and pressed into engagement with the sheet S by the pulley 7. The sheet S is moved relative to the pulley 7 as indicated by the arrows in Figure 1. In general, the sheet S is moved at a speed of about 12 feet per minute and polishing is accomplished in a plurality of passes in one direction or the other through the machine. Either or both of the pulleys 7 and 8 may be driven but preferably only the pulley 8 is driven. The pulley 7 is preferably made of soft material, for example, it may be in the form of an ordinary buffing wheel made up of laminated disks of fabric compressed into disk form. These disks may be fitted together in the usual way and confined between side plates on the ends of the pulley.

Another arrangement of pulleys is shown in Figure 4, wherein two pulleys 8 and 8' are provided in addition to pulley 7 which presses the abrasive belt against the work sheet. This arrangement is beneficial in preventing chattering. The pulleys 8 and 8' may be of relatively large diameter whereby the belt is flexed to a comparatively small degree in passing around them.

The vulcanized fiber which forms the foundation or backing of the novel belt of the present invention is dense and tough and a strip of it is relatively non-stretchable. The belts formed of it according to the present invention are straight and run true on the pulleys. Vulcanized fiber is a product made by hydrolizing cellulose whereby a gelatinous coating is obtained on the fiber. The hydrolized cellulose can be readily worked as by rolling into sheets of the desired thickness. One method of manufacture is to hydrolize cellulose fiber by treatment with zinc chloride. The hydrolized cellulose may then be worked or shaped and after the zinc chloride has been washed out, a product having high tensile strength, density and stiffness is secured. Other methods of hydrolizing cellulose may be used, and the term "vulcanized fiber" as used herein applies broadly to the dense, strong and somewhat flexible sheets of material obtained from hydrolized cellulose.

A belt made from hydrolized cellulose is practically constant in length. This is a beneficial characteristic since stretching in an abrasive belt is disadvantageous as the belt runs loosely on the pulleys and there is a gather or slight bulge where one part has stretched more than another. Even slight unevenness in stretching causes the abrasive belt to do irregular work. Constant length is of particular importance when a belt is to be extended about a pair of pulleys as described herein, since any tendency of the belt to stretch will cause slippage. Moreover, the stretching takes place unevenly as a general rule, so that the belt tends to work toward one end of the pulleys and to polish unevenly. Stretching of the belt tends to crack the abrasive coating with resulting loss of abrasive grain. The relatively nonstretchable belt of the invention therefore is helpful in preventing such disintegration of the abrasive coating.

The strip of vulcanized fiber is not so stiff as to prevent its being driven easily by the pulleys 7 and 8. At the same time, it is of sufficient stiffness to provide suitable backing for the layer of abrasive material carried by the belt, so that it bridges irregularities in the work and in the supporting pulley and the polishing operation performed upon the work sheet S is uniform across the sheet. The composite belt comprising a layer of vulcanized fiber is of particular advantage in polishing wide sheets since the vulcanized fiber presents a firm backing for the abrasive layer, so that the latter contacts wide sheets with uniform action across the sheets. At the same time, the strip of vulcanized fiber, because of its stiffness and resistance to stretch, prevents the belt from cracking as would be the case with a belt having only a layer of fabric. The fabric adds to the belt the characteristic of strength so as to pull under heavy loads.

The present invention, therefore, provides a belt which is relatively non-stretchable and which, while sufficiently flexible to permit being driven by a pulley and conforming to the general plane of the sheet to be polished, has sufficient firmness or stiffness to cause the abrasive to be applied evenly across the entire width of the sheet. The combination of the stiff belt with a soft pulley adjacent the sheet is of particular importance. The stiffness of the backing of the belt causes it to tend to resist undue flexing, which would crack the abrasive layer and cause it to disintegrate. At the same time the softness of the pulley 7 permits it to deform under pressure caused by the stiffness of the belt at the point of contact with

the sheet. In addition to improving the life of the abrasive layer, this small degree of flexing causes the belt to contact with the sheet over a relatively wide area. This results in an uniformity and fineness of finish being applied to the sheet which is not obtainable with prior means. The combination of the improved belt of the present invention with a soft pulley is important in obtaining these beneficial results. For example, they could not be obtained by the use of a soft pulley, together with an extremely flexible belt. Such a belt would probably be extremely stretchable with the disadvantageous results described above. Furthermore, the belt would be easily flexed upon passing about the pulleys with resultant cracking and disintegration of the abrasive layer. At the same time the contact between the belt and the sheet to be polished would be along a line, which would tend to cause the formation of ridges in the polished sheet. On the other hand, the combination of a stiff belt with a rigid, hard pulley would be disadvantageous. In such a combination the stiff belt would be flexed greatly by the rigid pulleys or if it were fitted about the pulleys loosely enough to prevent undue flexing, slippage between the belt and the pulley along the length of the pulley and along its periphery would result. It can be seen, therefore, that the new combination of the stiff, non-stretchable belt of the present invention with a soft pulley pressing it against the sheet to be polished results in improved finishes applied to the sheet and longer life of the belt and the abrasive layer carried thereon. At the same time the improved layer of abrasive material, for example, that produced by two successive applications of grain and adhesive material, provides an abrasive layer which is free-cutting, cool-running and of improved flexibility, whereby it resists cracking due to flexing of the belt.

This invention is not to be limited to a particular size or type of abrasive grain nor to the use of a particular adhesive such as glue. It will be understood that while we have illustrated and described certain embodiments of the invention, including the preferred embodiment, the invention may be otherwise embodied and practiced within the scope of the following claim.

We claim:

Apparatus for smoothing and polishing sheet material comprising a plurality of pulleys and an abrasive belt strung about the pulleys, one of the said pulleys being yieldable and adjacent the work to press a portion of the belt against the work, the said belt comprising a strip of vulcanized fiber, a layer of fabric intimately united thereto, and a coating of abrasive material adhesively attached to the said fabric.

EDWARD R. NEWCOMB.
HERBERT R. STRATFORD.