Feb. 6, 1934. E. KOCH 1,946,081

LIGHT METAL PISTON

Filed Feb. 11, 1933

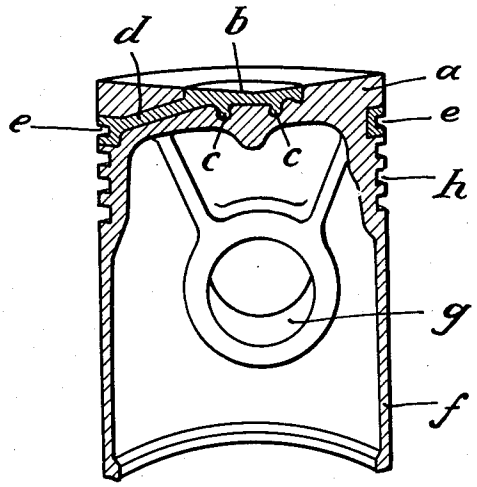


Inventor:
Erich Koch
by Karl Kishatty
Atty.

Patented Feb. 6, 1934 1,946,081

# UNITED STATES PATENT OFFICE

1,946,081

## LIGHT METAL PISTON

Erich Koch, Stuttgart, Germany, assignor to Elektronmetall G. m. b. H., Stuttgart-Cannstatt, Germany

Application February 11, 1933, Serial No. 656,310, and in Germany September 22, 1931

4 Claims. (Cl. 309—14)

My invention relates to pistons made of a light metal or light-metal alloy. It is an object of my invention to provide a piston of the kind referred to which will stand very high temperatures and quite particularly the temperatures existing in the combustion chambers of Diesel engines.

To this end I equip the piston head with a plate of heavy metal whose heat-expansion coefficient is equal, or substantially equal, to the heat-expansion coefficient of the metal or alloy the piston body is made of.

The plate is preferably cast into the piston body but may be secured to it in any other suitable manner, provided that the connection is strong enough for high-speed engines.

It is another object of my invention to provide a suitable seat or sleeve for the piston-packing rings in order to prevent wearing of the grooves in the body by the rings and to improve the heat conduction. To this end I connect a sleeve of heavy metal, preferably of the same metal as the plate, to this plate by an arm, or arms, extending from the plate to the sleeve. The sleeve is arranged to receive one or several piston rings.

In the drawing affixed to this specification and forming part thereof a piston embodying my invention is illustrated diagrammatically by way of example in perspective and axial section.

Referring to the drawing, *a* is the head, *f* is the skirt of the piston and *g* is one of its gudgeon-pin bosses. The piston head *a* is made of the same light metal, or light-metal alloy, as the piston skirt *f*. *b* is a plate of heavy metal which is preferably cast into, but may be otherwise secured to, the central portion of the piston on head *a*. *c* are projections, arms, serrations or the like on the lower side of the plate *b* which engage in the metal, or alloy, of the piston head *a*.

*e* is a piston-ring sleeve, here shown as a channel-section ring, for the reception of a piston-packing ring (not shown), and *d* is an arm, or one of a plurality of arms, by which the plate *b* is connected to the sleeve *e*. This sleeve is made of heavy metal, like the plate *b*, and may be grooved for the reception of more than one ring. *h* are grooves in the body of the piston for the reception of other piston rings (not shown).

By arranging a sleeve *e* as shown and connecting it to the central plate *b* by an arm, or arms, *d*, not only a satisfactory seating of the first piston ring, or rings, is provided, but an effective heat conduction is also obtained.

The plate *b* (and the sleeve *e* and arm or arms *d*, if provided) may consist of any suitable alloy, for instance, bronze or gray cast iron of various compositions.

A suitable gray-cast iron alloy may have the following composition:

| | Percent |
|---|---|
| Nickel | about 12 |
| Copper | about 5 |
| Manganese | about 1 |
| Silicon | about 2 |
| Chromium | about 1.5 |

Balance gray cast iron with about 3% carbon.

Diesel engines were initially equipped with pistons of gray cast iron, but when the speed of the Diesel engine was increased, the inertia forces of the heavy gray-cast iron pistons became excessive. Therefore the pistons were made of light metal or light-metal alloys. Such pistons present certain drawbacks under the very exacting temperature conditions of Diesel engines. The temperature required for the self-ignition of the fuel, i. e. its ignition by the heat of compression, is rather high and the light metals or light-metal alloys which are available as materials for piston bodies, are weakened to such an extent at the high temperature in the vicinity of the point of injection, that the piston head *a* is in danger of getting burnt out.

By providing the central plate *b* as described, the high temperature required for the self ignition of the fuel can be maintained without risk to the piston. The plate *b* is made of a heavy metal or alloy presenting good mechanical properties, and more particularly strength at high temperatures. The heat-expansion coefficient of the plate *b* should be equal, or substantially equal, to that of the piston body, as mentioned above. By shaping the plate like a crown, as shown, with its projections or the like *c* engaging in the piston head *a*, it obtains a good grip in the light metal or alloy of the piston head.

A central plate *b* as described, particularly if connected to the piston-ring sleeve *e* by the arm, or arms, *d*, protects the piston head from overheating at its most vulnerable point. The good heat conductivity of the light metal, or alloy, is not a desirable feature in a Diesel engine, as against carburetor engines, because it tends to lower the temperature required for the ignition by the heat of compression. Therefore the lower heat conductivity of the heavy-metal plate *b* is not a drawback, while, on the other hand, it does not cause excessive heating of the plate *b* because the heat is satisfactorily conducted away by the intimate contact of the plate *b* with the

material of the piston body, notwithstanding the lower conductivity of the plate. This favorable condition with respect to heat conduction is maintained at all temperature ranges, because, as mentioned above, the materials of the plate *b* and the piston body have equal, or substantially equal, heat-expansion coefficients and therefore remain in contact at all temperature ranges.

By means of the plate *b* it is possible to regulate the temperature at the piston head *a* to a range which is intermediate the operating temperatures for a gray-cast-iron piston and for a plain light-metal or alloy piston. This is effected by suitably determining the thickness of the plate *b*.

Regulation of the range of temperature by means of the plate *b* is very important as the temperature at the piston head *a* should vary with the diameter of the piston, the speed limit and the fuel which is used, for instance gas oil, tar oil, etc. If the temperature is too low so that self ignition is impossible or difficult, the plate *b* must be comparatively thick. On the other hand, if the temperature is so high that the piston head *a* would be in danger of burning out if made exclusively of light metal or alloy, the plate *b* is made thinner so that the heat is rapidly conducted to the thicker piston head.

For pistons of gray cast iron it has already been suggested to insert in the head of the piston a protective plate of a metal which is not affected by high temperatures, which does not readily oxidize and has the same heat expansion coefficient as the body of the piston, but a suitable piston of light metal, or alloy, for engines with self ignition of the fuel by the heat of compression, such as Diesel engines, has never been designed. Such protective plates have been provided also for pistons made of light metal, or alloy, and it was attempted to make up for the detrimental influence of the unequal heat expansion of the plate and the piston body by inserting in a space between the body and the plate a metal of low melting point which became liquid at the operating temperature of the engine. This, however, does not bring about the good conduction of heat according to the present invention, and, moreover, the liquid metal may leak out of the chamber so that the reliability of the piston is impaired.

The term "light metal" used in the claims is intended to cover also alloys containing a large proportion of a light metal.

I wish it to be understood that I do not desire to be limited to the exact details of construction shown and described for obvious modifications will occur to a person skilled in the art.

I claim:—

1. In a light metal piston in combination a plate of heavy metal in the head of the piston, the metal of the plate having substantially the same heat-expansion coefficient as the metal of the piston, a piston-ring sleeve on said piston, consisting also of heavy metal, and an arm connecting said plate to said sleeve.

2. In a light metal piston in combination a plate of heavy metal in the head of the piston, the metal of the plate having substantially the same heat-expansion coefficient as the metal of the piston, a piston-ring sleeve on said piston consisting also of heavy metal and an arm cast into said piston head and connecting said plate to said sleeve.

3. In a light metal piston in combination a structure of heavy metal comprising a piston ring sleeve, a central plate, and an arm connecting said plate to said sleeve, said structure being arranged to be connected to the piston in such manner that the plate is located at the centre of its head and the sleeve on its perimeter, the metal of the structure having the same heat-expansion coefficient as the metal of the piston.

4. In a light metal piston in combination a structure of heavy metal comprising a piston ring sleeve, a central plate, and an arm connecting said plate to said sleeve, said structure being arranged to be connected to the piston in such manner that the plate is located at the centre of its head and the sleeve on its perimeter, the metal of the structure having the same heat-expansion coefficient as the metal of the piston and the following composition:

| | Per cent |
|---|---|
| Nickel | about 12 |
| Copper | about 5 |
| Manganese | about 1 |
| Silicon | about 2 |
| Chromium | about 1.5 |

Balance gray cast iron with about 3% carbon.

ERICH KOCH.