April 18, 1933. L. HEIGL 1,904,942

SURGICAL LEG STRETCHING DEVICE

Filed March 29, 1930

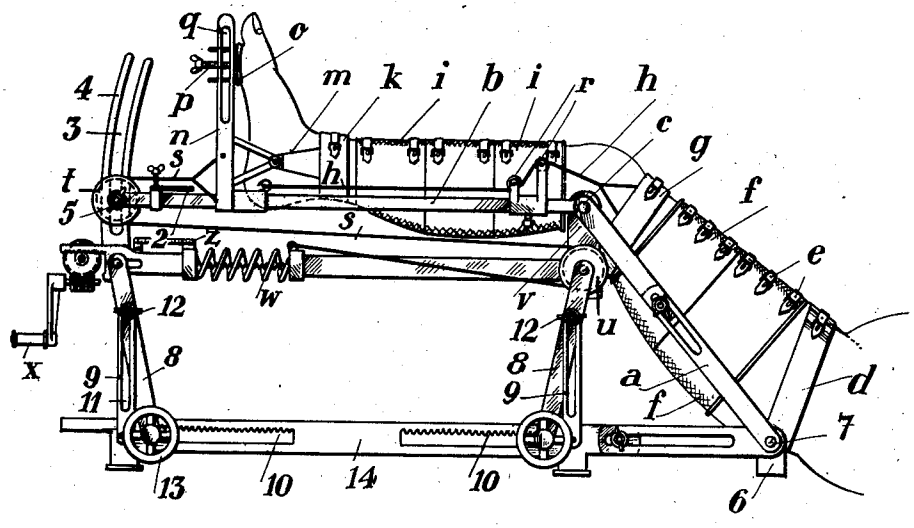

Inventor.

Ludwig Heigl

Patented Apr. 18, 1933

1,904,942

UNITED STATES PATENT OFFICE

LUDWIG HEIGL, OF WEIDEN, GERMANY, ASSIGNOR OF ONE-FOURTH TO FRED ZEISSEL AND JAMES S. KENDALL, BOTH OF KNOX COUNTY, TEXAS

SURGICAL LEG-STRETCHING DEVICE

Application filed March 29, 1930, Serial No. 440,088, and in Germany February 12, 1930.

The object of the present invention is to produce a surgical apparatus whereby a surgeon can, single-handed, prop up and apply easily-controllable tension to a broken leg, and the invention consists in the provision of a leg-supporting frame to which the leg is connected by means of a thigh strap and which is provided with a winch and with ropes guided over pulleys and connected to knee and ankle straps on the leg for stretching the latter.

The rope connections include spring elements, and a foot rest is provided which participates in the stretching movement, the extension of the springs and the displacement of the foot rest being indicated by means of graduated scales as a guide for the operator. Means are provided for regulating the effective height of the apparatus as well as the angular position of the leg-supporting elements.

The invention is illustrated in the accompanying drawing which represents a side view showing the apparatus in use.

The apparatus comprises a frame 14 which may be provided with supporting rollers or with means for connection to a bedstead. One part 6 of the frame is extensible and is connected by means of pivots 7 to inclined, extensible struts *a* adapted to receive the thigh of the leg between them. The struts *a* are connected by means of pivots *c* to supporting brackets *v* which also hold on the same pivots the ends of bars *b* between which the leg proper is supported. The free ends of the bars *b* are interconnected by a stay which is guided in the space 3 between the members of a fork 4. The latter is curved concentrically with the pivot pin *c* so as to allow the bars to be angularly displaced for supporting the leg proper in any desired angular position. A clamp screw 5 is used for securing the bars in the adjusted position. The bars *b* serve as guides for a slidable foot rest *n* which is connected by means of a rope *s* to a winch *x*. The rope is guided over a pulley *t* mounted on the stay connecting the free ends of the bars 2, and over a pulley *u* mounted on the frame at the opposite end of the latter. The winch acts on the rope through the medium of a slide and springs *w*, a scale *z* being provided whereon the movement of the slide and thus the extension of the springs can be gauged.

The leg is connected to the struts *a* by means of a thigh strap *d*. A knee strap *g* is connected by ropes *h* to the foot rest *n* for stretching the thigh. The rope is guided over pulleys *r* so as to apply the pull in the right direction. The pulleys are mounted on brackets which are adjustably supported on the bars *b*. For stretching the leg proper an ankle strap *k* is provided which is connected by loops or links to the foot rest. The displacement of the foot rest and thus the extent of the stretching can be gauged by means of a scale 2. Leg bandages *i* and thigh bandages *f* are provided for maintaining the fractured parts in their proper relative positions, the use of plaster of Paris being thus obviated. The bandages are secured by means of buckles *e* so as to allow of easy removal in order to gauge the progress of the healing process. The stretching straps are padded with rubber or the like so that they can obtain a good grip on the leg without causing pain and without interfering with the blood circulation.

The foot rest is provided with a vertically and horizontally adjustable support *o* for the ball of the foot. The horizontal adjustment of this support is effected by means of a screw spindle *p*.

The effective height of the apparatus is regulated through the medium of racks 10 along which the lower ends of supporting struts 8 can be shifted by means of hand wheels 13 and pinions in order to place the struts in a more or less inclined position. The struts are supported by links 9 having longitudinal slots 11 wherein clamp screws 12 are guided.

The apparatus can easily be operated by a surgeon single-handed. After the frame has been adjusted to suit the leg and after the straps have been secured to the latter, the winch is operated for stretching the leg and separating the fractured parts so as to allow them to be properly positioned relative to each other. After the parts have been thus positioned the pull may be slackened and

afterwards maintained only at sufficient magnitude to prevent the leg from getting short during the healing process. The magnitude of the pull and the extent of the stretching can readily be ascertained from the scales.

The apparatus can also be used with advantage for stretching and righting abnormally shaped legs, for instance of children.

I claim:—

1. A surgical leg-stretching device comprising in combination, a leg supporting frame having a tiltable upper portion, a thigh strap connected to said frame, knee and ankle straps, a foot rest arranged to slide on said tiltable frame portion, means for connecting said foot rest to the ankle strap, ropes connecting said foot rest with the knee strap, adjustable guide pulleys supporting said ropes on the tiltable frame portion, a winch mounted on the frame, ropes connecting said winch with the foot rest, pulleys guiding said latter ropes on the different frame portions to allow a supported leg to be stretched by means of the winch, and a spring element inserted between the ropes and the winch.

2. The apparatus claimed in claim 1 in combination with supporting struts pivoted to the leg frame, supporting racks, pinions whereby said struts are supported on said racks, slotted controlling links for said struts, clamp screws whereby the struts are guided in the slots of said links and whereby they can be secured to the links in different positions, and hand wheels for turning the pinions on the racks to varied angular positions of the struts.

LUDWIG HEIGL.