July 7, 1931. C. J. BETTGER 1,813,605

CAN WASHER

Filed Dec. 31, 1927 4 Sheets-Sheet 1

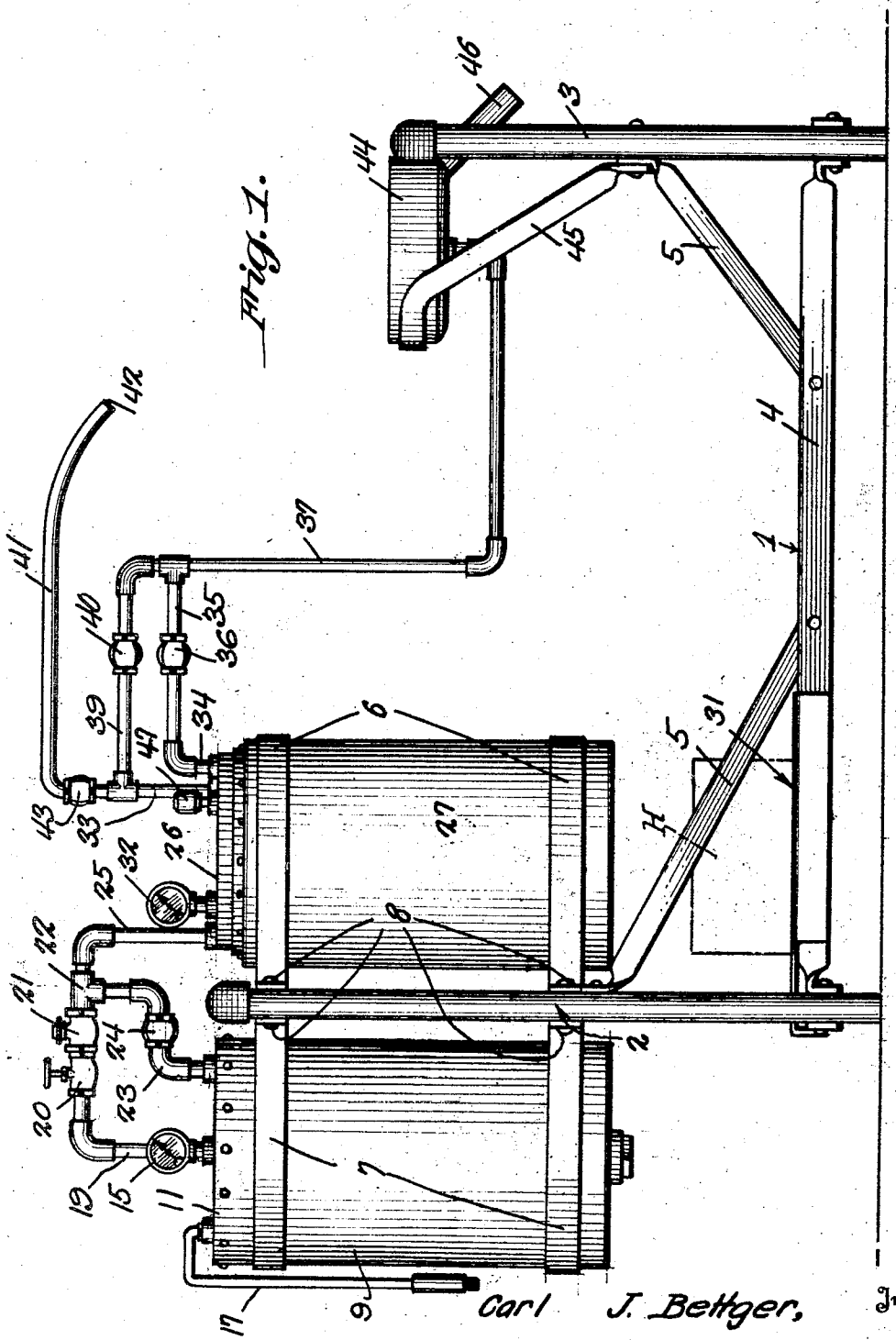

Carl J. Bettger, Inventor

Witnesses
C. E. Cunchman Jr.
Geo. H. Forbes,

By Irving L. McCathran

Attorney

July 7, 1931. C. J. BETTGER 1,813,605

CAN WASHER

Filed Dec. 31, 1927 4 Sheets-Sheet 2

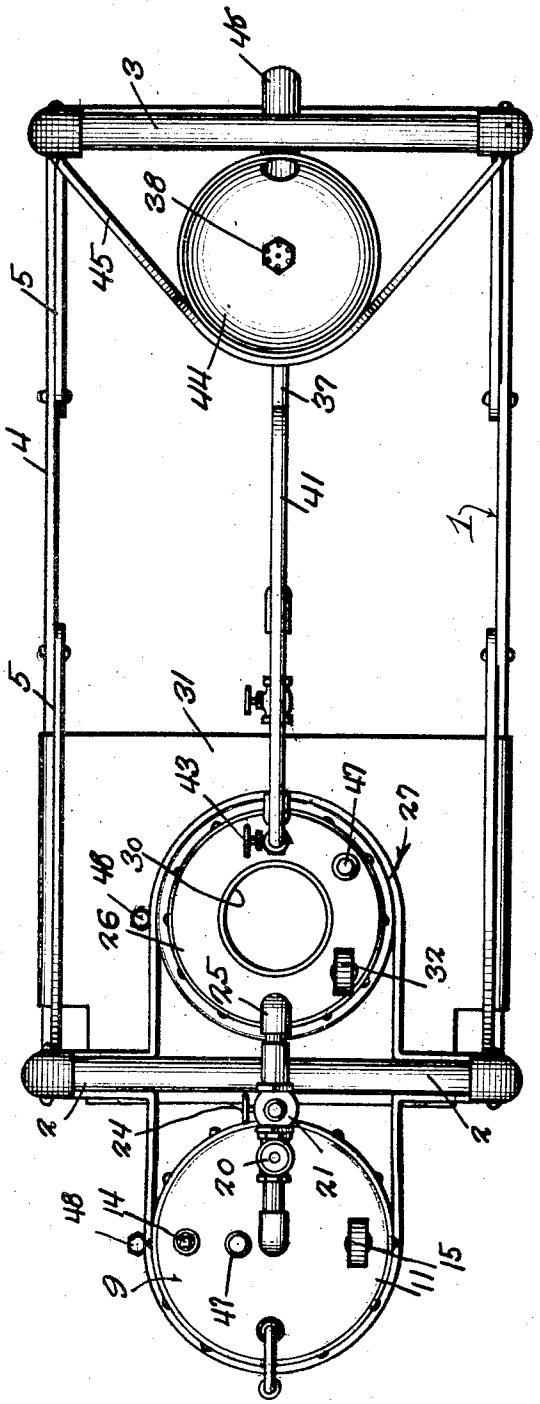

Fig. 2.

Carl J. Bettger, Inventor

Witnesses
C. E. Churchman Jr.
Geo. H. Forbes.

By Irving L. McCathran
Attorney

July 7, 1931. C. J. BETTGER 1,813,605

CAN WASHER

Filed Dec. 31, 1927 4 Sheets-Sheet 3

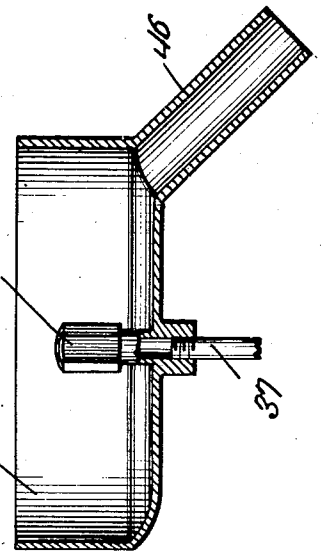

Fig. 4.

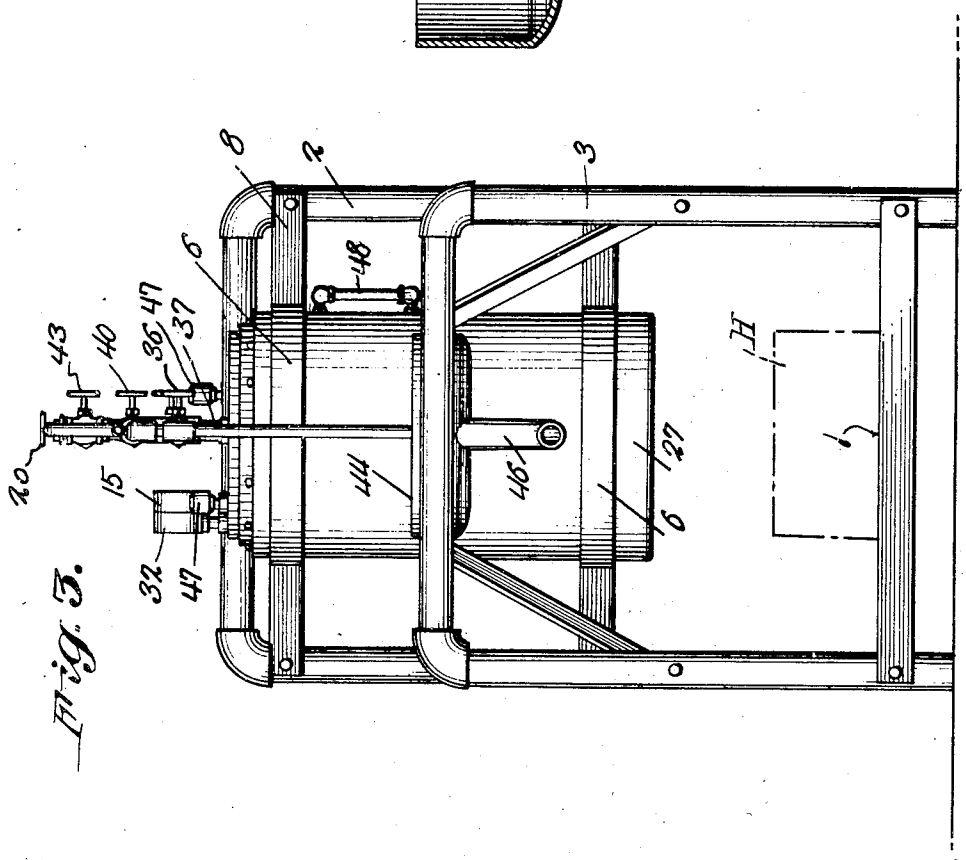

Fig. 3.

Carl J. Bettger, Inventor.

Witnesses
C. E. Chinchman Jr.
Geo. H. Forbes

By Irving L. McCathran

Attorney

July 7, 1931. C. J. BETTGER 1,813,605

CAN WASHER

Filed Dec. 31, 1927 4 Sheets-Sheet 4

Fig. 6.

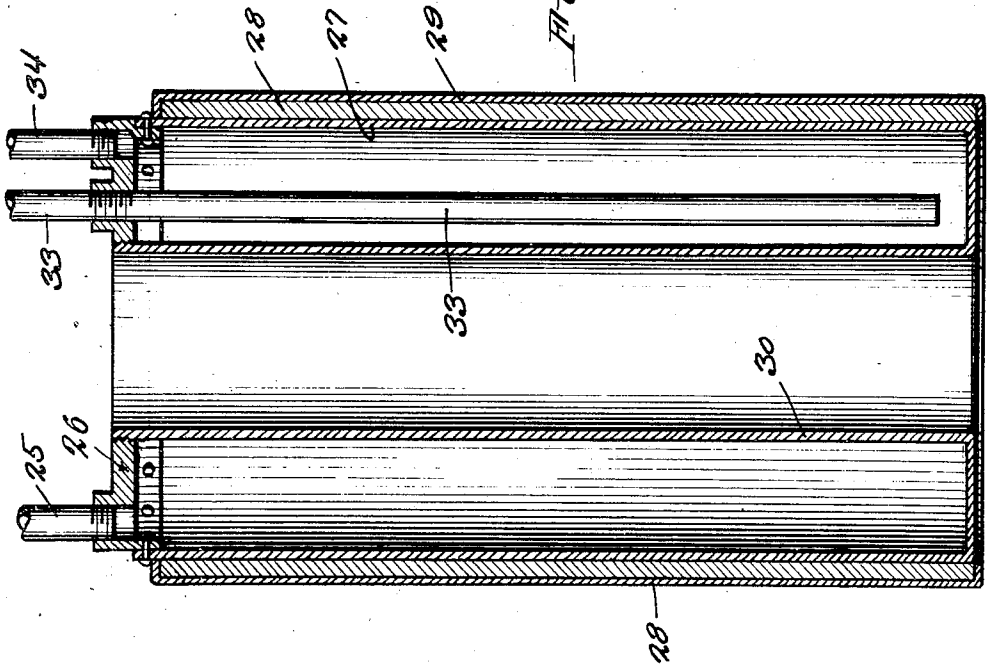

Fig. 5.

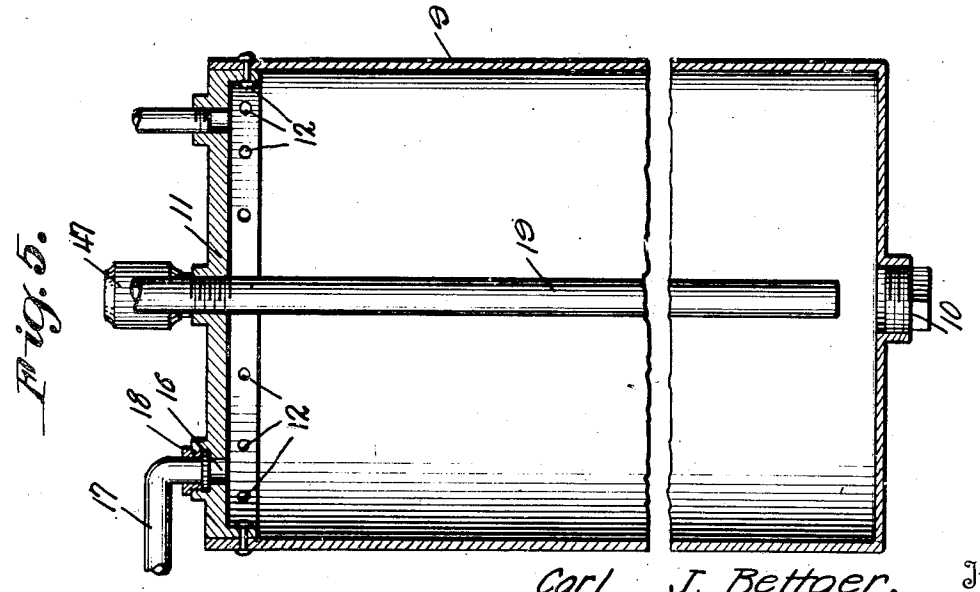

Carl J. Bettger, Inventor

Witnesses
C. E. Churchman Jr.
Geo. H. Dobbs.

By Irving L. McCathran
Attorney

Patented July 7, 1931 1,813,605

UNITED STATES PATENT OFFICE

CARL J. BETTGER, OF HERREID, SOUTH DAKOTA

CAN WASHER

Application filed December 31, 1927. Serial No. 243,922.

This invention relates to washing apparatus and pertains particularly to a washer for milk cans. The primary object of the present invention is to provide a washing device designed to supply boiling water under pressure and steam, through a nozzle into and against the outside of the can to be washed, means being provided whereby either the water or the steam alone can be directed against the can.

Another object of the invention is to provide a structure of the character described which will greatly facilitate the cleansing of the can, doing the work in a thoroughly desirable manner.

The invention contemplates broadly the provision of a pair of water tanks, one of which is designed to be heated and to contain water under steam pressure, the other tank being designed to receive air under pressure, the two tanks being connected so that the water from the air tank can be readily transferred to the hot water tank and also having means whereby the compressed air from the one tank can be discharged into the other or hot water tank to raise the pressure therein when the steam pressure has dropped below the amount necessary for the proper operation of the outfit.

The invention will be best understood from a consideration of the following detailed description taken in connection with the accompanying drawings forming a part of the present specification, with the understanding, however, that the invention is not confined to any strict conformity with the showing of the drawings, but may be changed or modified so long as such changes or modifications mark no material departure from the salient features of the invention as expressed in the appended claims.

In the drawings:—

Figure 1 shows the can-washing mechanism in side elevation.

Figure 2 is a top plan view of the same.

Figure 3 is an end elevational view of the structure.

Figure 4 is a detailed transverse section through the basin in which the can is arranged in inverted position for washing.

Figure 5 is a vertical longitudinal section through the air pressure tank.

Figure 6 is a longitudinal section through the hot water and steam tank.

Referring to the drawings in detail wherein like numerals of reference indicate corresponding parts throughout the several views, the numeral 1 indicates generally the frame of the structure which comprises the head and the foot frames 2 and 3 respectively, which frames are of inverted substantially U-shaped configuration and may be made of pipe sections in the manner shown, the legs of the frames 2 and 3 being connected by the side rails 4. Suitable bracing elements 5 connect the side rails with the legs of the head and foot pieces, as shown, to make a rigid structure.

It is, of course, to be understood that the frame structure herein described is one of a number of types which may be employed and applicant does not wish to limit himself to the particular structure shown and described.

Supported at the opposite sides of the frame 2 by means of the band clamps 6 and 7 which clamps, as shown, are of U-shaped configuration and have their ends secured to the side-pieces or legs of the frames 2 in the manner indicated by the numerals 8, are tanks 9 and 27.

The clamp 7 passes about a tank 9 which is designed to contain water and air under pressure, this tank having the drain plug 10 in the bottom thereof and the top 11 securely riveted thereto by the rivets 12.

The top 11 of the air-tank is provided with a filling opening 14 and a pressure-gauge 15 by means of which the pressure of the air within the tank may be readily determined. Entering the tank at the point 16 is an air inlet pipe 17, a suitable packing 18 being secured thereabout to make the connection between the pipe and the top of the tank leak-proof. Any desired means may be employed for forcing air into the tank, such as a hand-pump, or the like.

Projecting through the central portion of the top 11 of the air tank and leading from a point adjacent the bottom of the same as

shown in Fig. 5, is a water outlet pipe 19 which pipe leads to a hand-controlled valve 20 which valve connects directly to a one-way or check valve 21. A coupling 22 is connected with the check valve 21 and has in turn connected therewith the pipe line 23 which leads from the interior of the upper portion of the water tank 9 through the top 11, and which is controlled by a hand-valve 24, and the pipe 25 which leads directly to and through the top 26 of the steam tank 27. This tank is covered with a layer of asbestos or similar insulating material 28, over which material a top covering of metal 29 is placed. A heat-passageway or flue 30 is formed through the center of the tank 27 so that heat generated by a suitable heating element H mounted upon the platform 31 which is mounted between the side rails 4 of the supporting frames, will pass upwardly through the body of water in the tank to more quickly bring the same to a proper temperature.

The top 26 of the tank is also provided with the pressure-gauge 32 and has extending therethrough the hot water outlet pipe 33 which passes into the tank 27 to a point adjacent the bottom thereof. In addition to the pipe 33 there opens through the cover 26 into the interior of the tank 27 the steam outlet pipe 34, which steam pipe is connected by the pipe line 35, which has a control valve 36 therein, with the pipe line 37 which leads to the discharge nozzle 38 arranged as hereinafter described. The hot water outlet pipe 33 is also connected to the pipe 37 by the pipe line 39 which pipe line is controlled by the hand valve 40. In addition to the pipe 39 which leads from the hot water outlet pipe 33 there is connected with this outlet pipe the pipe 41, the free end of which terminates in a nozzle 42. A control valve 43 is interposed between the pipe 41 and the water outlet pipe 33 in the manner shown.

Supported upon the foot frame 3 is a basin 44 through the bottom of which the pipe line 37 extends as clearly shown in Fig. 4, the nozzle 38 being positioned in the bottom to receive the water and steam from the pipe 37 to spray the same into the milk cans inverted thereover. A suitable securing strap 45 is provided to pass around the basin and hold the same in position on the frame by the securing of the ends of the strap to the frame 3. A drain pipe 46 leads from the lower part of the basin to carry off the waste water.

From the foregoing description it will be readily understood that when the milk can is inverted in the basin with the nozzle 38 directed upwardly thereinto, boiling water can first be discharged into the can by turning on the valve 40, it being assumed, of course, that sufficient steam has been generated in the boiler 27 to create the necessary amount of pressure for forcing the water therefrom. The outside of the can may also be washed by turning on the valve 43 allowing the hot water to be discharged from the nozzle 42 over the exterior of the can.

After the washing process the can may be dried or the inside sterilized by closing the valves 40 and 43 and opening the valve 36 to draw off the steam for discharge through the nozzle 38 into the can. In the event that the steam pressure in the boiler 27 is not sufficient to force the water therefrom, additional pressure can be set up in the boiler by opening the valve 24 of the water tank 9 thereby permitting the air under pressure in this tank to pass into the boiler 27 and raise the internal pressure of the same. Additional water is run into the boiler 27 by opening the valve 20 after closing the valve 24, the air pressure in this tank forcing the water therefrom and over into the boiler. If desired, the valve 20 may be kept open sufficiently to replenish the water in the tank 27 as the same is used.

Each of the tanks 9 and 28 is provided with a safety valve of any suitable design as indicated at 47 and in addition each tank is provided at one side with a water glass 48.

From the foregoing description it will be readily seen that with an outfit of the character described, milk cans and other articles may be readily and thoroughly cleansed for further use.

Having thus described my invention, what I claim is:—

1. A hot water and steam generator comprising a supporting frame, a pair of tanks mounted on said frame, one of said tanks to contain water under air pressure, the other tank to contain hot water under steam pressure, means for discharging water or compressed air from the first mentioned tank to the hot-water tank, and heating means for the last mentioned tank.

2. A hot water and steam generator comprising a supporting frame, a pair of tanks mounted on the opposite sides of said frame, one of said tanks to contain water under air pressure, means for introducing air under pressure into said tank, the other tank to contain hot water under steam pressure, means for discharging water or compressed air from the first mentioned tank into the hot water tank, means for heating the last mentioned tank arranged upon said frame, and means for directing steam, hot water or both from said last mentioned tank.

In testimony whereof I affix my signature.

CARL J. BETTGER.