(12) INTERNATIONAL APPLICATION PUBLISHED UNDER THE PATENT COOPERATION TREATY (PCT)

(19) World Intellectual Property Organization
International Bureau

(43) International Publication Date
20 October 2011 (20.10.2011)

PCT

(10) International Publication Number
WO 2011/130522 A1

(51) International Patent Classification:
C02F 1/44 (2006.01)

(21) International Application Number:
PCT/US2011/032513

(22) International Filing Date:
14 April 2011 (14.04.2011)

(25) Filing Language: English

(26) Publication Language: English

(30) Priority Data:
61/323,983 14 April 2010 (14.04.2010) US
61/324,123 14 April 2010 (14.04.2010) US

(71) Applicant *(for all designated States except US)*: **KINETICO INCORPORATED** [US/US]; 10845 Kinsman Road, Newbury, OH 44065 (US).

(72) Inventors; and

(75) Inventors/Applicants *(for US only)*: **PARK, Stuart, L.** [US/US]; 13205 Stoney Springs Dr., Chardon, OH 44024 (US). **RED, Francis, A.** [US/US]; 3315 Center Drive, Parma, OH 44134 (US). **JORDAN, George, R.** [US/US]; 10996 Kile Road, Chardon, OH 44024 (US). **JAROCH, Matthew, E.** [US/US]; 17001 Messenger Road, Auburn, OH 44023 (US). **KOVACH, Jerome** [US/US]; 100845 Waterford Trail, Chagrin Falls, OH 44023 (US). **PUTKA, Christopher** [US/US]; 17421 Oxford Avenue, Cleveland, OH 44111 (US).

(74) Agent: **HLAVKA, John, R.**; Tarolli, Sundheim, Covell & Tummino LLP, 1300 East Ninth Street - Suite 1700, Cleveland, OH 44114 (US).

(81) Designated States *(unless otherwise indicated, for every kind of national protection available)*: AE, AG, AL, AM, AO, AT, AU, AZ, BA, BB, BG, BH, BR, BW, BY, BZ, CA, CH, CL, CN, CO, CR, CU, CZ, DE, DK, DM, DO, DZ, EC, EE, EG, ES, FI, GB, GD, GE, GH, GM, GT, HN, HR, HU, ID, IL, IN, IS, JP, KE, KG, KM, KN, KP, KR, KZ, LA, LC, LK, LR, LS, LT, LU, LY, MA, MD, ME, MG, MK, MN, MW, MX, MY, MZ, NA, NG, NI, NO, NZ, OM, PE, PG, PH, PL, PT, RO, RS, RU, SC, SD, SE, SG, SK, SL, SM, ST, SV, SY, TH, TJ, TM, TN, TR, TT, TZ, UA, UG, US, UZ, VC, VN, ZA, ZM, ZW.

(84) Designated States *(unless otherwise indicated, for every kind of regional protection available)*: ARIPO (BW, GH, GM, KE, LR, LS, MW, MZ, NA, SD, SL, SZ, TZ, UG, ZM, ZW), Eurasian (AM, AZ, BY, KG, KZ, MD, RU, TJ, TM), European (AL, AT, BE, BG, CH, CY, CZ, DE, DK, EE, ES, FI, FR, GB, GR, HR, HU, IE, IS, IT, LT, LU, LV, MC, MK, MT, NL, NO, PL, PT, RO, RS, SE, SI, SK, SM, TR), OAPI (BF, BJ, CF, CG, CI, CM, GA, GN, GQ, GW, ML, MR, NE, SN, TD, TG).

Declarations under Rule 4.17:

— *of inventorship (Rule 4.17(iv))*

Published:

— *with international search report (Art. 21(3))*

(54) **Title**: MOBILE FLUID TREATMENT SYSTEM

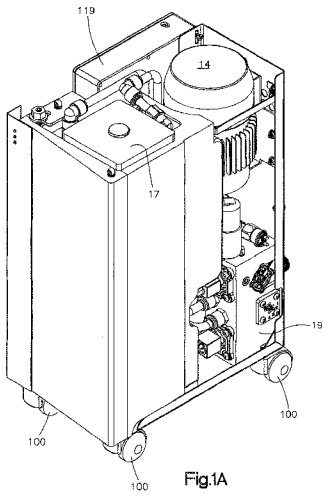

Fig.1A

(57) **Abstract**: A mobile fluid treatment system and method including structure supporting a tank, reverse osmosis (RO) membranes, a feed pump for delivering feed water to the membrane assembly and a permeate pump for delivering permeate from the tank. A first control valve communicates a feed water inlet directly to an outlet, the outlet being able to deliver feed water or permeate depending on conditions.^ flow sensor monitors and detects outlet flow. A second fluid control flow valve communicates feed water to the feed pump when the sensor does not detect outlet flow and the permeate tank is low. The control valves, flow sensor and flow restrictor are all mounted in a housing that defines integral passages for fluidly communicating the valves, the flow sensor and adjustable flow restrictor. The components and housing together form an assembly that is easily serviced and eliminates individual component plumbing connections, thus reducing leaks.

WO 2011/130522 A1

MOBILE FLUID TREATMENT SYSTEM

Related Applications

This application claims priority from U.S. Provisional Application No. 61/324,123, filed April 14, 2010, and U.S. Provisional Application No. 61/323,983, filed April 14, 2010, the entirety of which is incorporated herein by reference.

Technical Field

The present invention is directed to fluid treatment systems and, in particular, is directed to a mobile reverse osmosis based treatment system that can rapidly create, store and deliver treated water in a compact space.

Background of the Invention

Various methods and apparatus are known for purifying solvents, particularly water. One such method utilizes the principle of reverse osmosis to reduce or eliminate the quantity of dissolved solids in a liquid. According to the reverse osmosis principle, a semi-permeable membrane is used to separate the solvent from the dissolved solids, for example, in purifying water, a membrane is selected that exhibits greater permeability to water than the dissolved solids carried by the water. Raw feed water is applied to the membrane at a pressure generally greater than the osmotic pressure of the water. Under pressure, water passes through the membrane leaving behind the dissolved solids. The liquid passing through the membrane is generally termed "permeate" whereas the liquid remaining on the input side of the membrane is generally termed "concentrate" and is usually discarded to a drain. Since the concentration of the solutes increases on the concentrate side of the membrane during the reverse osmosis process, precipitation of one or more of the dissolved solids can occur. This precipitation can cause plugging of the membrane, thereby lowering the efficiency of the process. To remedy this, some systems recycle a portion of permeate back through the membrane to flush the membrane of these precipitates.

Due to the number of products and byproducts generated by the reverse osmosis process, as well as the need to periodically flush the membrane, conventional fluid treatment systems require a multitude of plumbing connections and space to accommodate all the necessary processing and storage components. Such systems are

therefore susceptible to leaks and require a large amount of space. There is therefore a need to provide a fluid treatment system that is capable of performing all the aforementioned tasks while minimizing the probability of leakage and requiring a minimal amount of space.

Summary of the Invention

The present invention relates to a new and improved mobile fluid treatment system and method for operating a mobile treatment system that has commercial, industrial and residential applications.

In the preferred and illustrated embodiment, the mobile fluid treatment system includes structure that supports a permeate tank, a reverse osmosis membrane assembly, a feed pump for delivering water to be treated, under pressure, to the membrane assembly and a permeate pump for delivering permeate from the permeate tank. The structure also defines an inlet for receiving feed water, an outlet for delivering feed water or permeate, depending on predetermined operating conditions and a drain for discharging concentrate from the membrane assembly. A control system for the disclosed mobile fluid treatment unit includes a fluid passage controlled by a first control valve for connecting the feed water at the inlet to the outlet under predetermined operating conditions. A flow sensor is provided for detecting fluid flow from the outlet period. A second fluid control valve is operative to communicate feed water to the feed pump when the flow sensor does not detect flow from the outlet and permeate in the permeate tank is below a predetermined level. A flow restrictor controls the flow rate of concentrate to a drain from the membrane assembly. According to a feature of this embodiment, the first and second control valves, the flow sensor and the flow restrictor are all mounted in a common housing. The housing defines integral passages for fluidly communicating the valves, the flow sensor and the flow restrictor.

In the preferred embodiment, an extremely compact fluid treatment unit is provided. More importantly, the valving, sensors and flow restrictor are mounted in a common, compact housing which together from a compact flow block/manifold assembly. This feature not only reduces external plumbing connections for the various system components but, importantly, reduces the potential areas of leakage when individual components are used and interconnected by conduits and hoses.

Serviceability is also greatly enhanced, since the flow block/ manifold assembly can be easily replaced as a unit after a minimum number of fluid lines are disconnected from the flow block assembly.

According to an exemplary embodiment, the common housing is molded and/or machined from a plastic material such as natural acetal plastic. In the illustrated embodiment, the housing defines mounting surfaces for the valving components and may include structural formation that cooperate with the valving component mounted to the location. Necessary check valves and other hardware are also carried by the housing.

According to another feature of the preferred embodiment, the permeate tank is an assembly that is configured to efficiently fit within a mobile fluid treatment cabinet or footprint. In particular, the permeate tank assembly receives and supports the RO membrane assembly within the permeate reservoir and also supports a permeate level sensor assembly that in the illustrated embodiment can detect a low permeate level, a high permeate level and a mid permeate level. In addition, the tank structure defines a recess for receiving at least a portion of the feed water pump which also provides an air path for cooling a motor forming part of the feed pump. Recesses are also defined by the tank structure for accommodating portions of the permeate delivery pump and an inlet filter, as well as a mount for an electrical control box. The tank also defines stand-offs for supporting the RO membrane assembly above the bottom of the tank in order to reduce the possibility of developing stagnant water at the base of the membrane unit.

According to a preferred method of operating the mobile fluid system, the fluid flow from an outlet is monitored. Upon detecting flow from the outlet, a bypass fluid control valve is closed to interrupt communication between a feed water inlet and the outlet and, under predetermined operating conditions, the permeate pump is energized to deliver permeate from the permeate tank to the outlet. Upon detecting a predetermined low level of permeate in the permeate tank, the fluid bypass control valve is actuated in order to communicate the feed water inlet with the water outlet while concurrently communicating feed water at the inlet to the RO membrane assembly while de-energizing the feed pump in order to allow feed water at inlet pressure to be processed by the RO membrane assembly. With this disclosed method,

permeate can be produced by the unit while the unit is operating in bypass mode i.e. the mode during which feed water at the inlet is fed directly to the outlet.

According to a further feature of this embodiment, a level of permeate in the permeate tank is monitored while concurrently monitoring whether fluid flow from the outlet is occurring. Upon detecting the absence of flow from the outlet, the feed pump is energized while communicating feed water at the inlet to the feed pump, which causes inlet feed water to be supplied, under pressure, to the RO membrane assembly. This continues until permeate in the permeate tank reaches a predetermined level. According to the more preferred method, the feed water is communicated to the feed pump through a electrically operated normally closed fluid control valve and the feed water is communicated to the outlet through an electrically operated normally closed fluid control valve.

According to a feature of the more preferred embodiment, the membrane in the RO membrane assembly is flushed by de-energizing the feed pump while allowing concentrate in the membrane assembly to continue to flow the drain through a restricted passage, thereby allowing permeate in the tank to travel from the permeate side of the RO membrane to a concentrate side of the membrane and then to drain.

According to a more preferred embodiment of the mobile fluid treatment system, the flow restrictor is adjustable and preferably comprises the adjustable flow control disclosed in PCT Application PCT/US11/32212, filed April 13, 2011, the specification of which is attached as Appendix 1 and is hereby incorporated by reference.

Brief Description of the Drawings

The foregoing and other features and advantages of the present invention will become apparent to those skilled in the art to which the present invention relates upon reading the following description with reference to the accompanying drawings, in which:

Fig. 1A is a perspective view of a mobile fluid treatment system constructed in accordance with a preferred embodiment of the invention and with certain covers removed to s how interior detail;

Figs. 1B, 1C and 1D are side elevational views of the mobile fluid treatment system shown in Fig. 1A;

Fig. 1E is a top elevational view, with cover removed, of the mobile fluid treatment system shown in Fig. 1A;

Fig. 2 is an exploded view of the mobile fluid treatment system shown in Fig. 1A;

Fig. 3 is a schematic representation of the mobile fluid treatment system shown in Fig. 1A;

Fig. 4 is a logic diagram that schematically illustrates the control system for controlling the mobile fluid treatment system;

Fig. 5A is a perspective view of a flow block assembly/flow manifold constructed in accordance with a preferred embodiment of the invention;

Fig. 5B is a top plan view of the flow block assembly shown in Fig. 5A;

Figs. 5C and 5D are side elevational views of the flow block assembly shown in Fig. 5A;

Fig. 5E is an exploded view of the flow block assembly shown in Fig. 5A;

Figs. 6A and 6B are side elevational view of a membrane assembly constructed in accordance with a preferred embodiment of the invention;

Fig. 6C is a top plan view of the membrane assembly shown in Figs. 6A and 6B;

Fig. 6D is a side elevational view of a membrane unit and associated seals that form part of the membrane assembly shown in Fig. 6A;

Fig. 6E is an elevational view of a tie rod assembly that forms part of the membrane assembly shown in Fig. 6A;

Figs. 7A-7D illustrate the overall construction of a permeate tank forming part of the mobile fluid treatment system and constructed in accordance with a preferred embodiment of the invention; and

Figs. 8A-8C schematically illustrate a permeate flush feature that forms part of the mobile fluid treatment system.

Detailed Description

The present invention is directed to fluid treatment systems and, in particular, is directed to a fluid treatment system that has prefilter, low pressure switch, flow manifold, pressurization pump, membrane manifold, storage tank, level switches and permeate pump, which are uniquely controlled and configured to provide treated water

to an application demanding intermittent delivery of treated water from a compact and mobile design.

Figs. 1A-1E, 2 and 3 illustrate a mobile fluid treatment system (MFTS) constructed in accordance with a preferred embodiment of the present invention. Figs. 1A-1E and 2 illustrate the overall construction of an actual fluid treatment unit embodying the invention, whereas, Fig. 3 is a schematic representation of the fluid treatment system.

As seen best in Figs. 1A and 2, the fluid treatment unit is preferably mobile and includes a plurality of wheels 100 which enable the unit to be easily moved. The machine illustrated in these figures is intended for use in connection with a water-based process such as dishwashing and is capable of providing a relatively large quantity of purified water using a reverse osmosis apparatus. According to the invention, the machine is self-contained and requires only a power connection and fluid connections (shown in Fig. 1D), namely, a connection 11a to a source of water to be treated, an output 12a for delivering purified water, i.e., permeate to the dishwasher and a connection 13b to drain through which concentrate is discharged. A drain connection 13a may also be provided for discharging overflow water from the treatment system.

The treatment unit is preferably a rectangular-shaped structure which includes, (as seen best in Fig. 2), removable side and top covers 110, 112, 114. Removing the covers reveals major components of the machine which include a feed pump 14 for delivering water to be treated under pressure to a membrane assembly 15. As is known, the membrane assembly includes a reverse osmosis membrane 16 (shown in Figs. 3 and 6D) which produces permeate and discharges concentrate.

The treatment unit includes a storage tank 17 which, as seen in Fig. 2, is preferably a molded structure and is molded to fit within the unit and to also accommodate, and in some cases, serve as a mounting structure for components contained in the unit. In addition, the membrane assembly 15 is located within the storage tank so that permeate leaving the membrane assembly flows into and fills the storage tank 17. The storage tank also includes a float switch assembly 35 (Fig. 2) which monitors permeate level in the tank. The float switch assembly may include discreet float switches 35a, 35b, 35c (shown in Fig. 3) which indicate when the tank 17 is full, partially full and empty or very low. As seen in Fig. 2, the unit includes a

delivery pump 28 for delivering permeate to another machine or process such as a dishwashing machine. A filter 10 is also provided for initially filtering the incoming feed water and may include a sediment cartridge and a carbon filter.

Referring also to Figs. 5A-5E, a flow block assembly or manifold 19 controls the operation of the machine and includes a normally opened bypass solenoid valve 36, a normally closed inlet solenoid valve 20 and a flow meter assembly 33 which includes a flow turbine 33a. The components carried by the flow bock assembly 19 are shown schematically in Fig. 3. Figs. 5A-5E illustrate the components that comprise the flow block assembly 19.

Referring now to Figs. 2 and 3, the system includes the prefilter 10 connected to an input conduit or feed conduit 11 (which is connected to the feed inlet 11a shown in Fig. 1D) through which feed water to be purified is communicated to the MFTS unit. The MFTS unit also communicates with output conduits 12 and 13 through which "permeate" and "concentrate" are discharged, respectively, from the MFTS. The output conduits are connected to the outlet fittings 12a, 13a, respectively, shown in Fig. 1D. The MFTS includes the pump 14 for pumping the feed water under pressure to the membrane assembly 15 which includes the semi-permeable membrane 16 (only shown in Fig. 3) for processing the feed water into concentrate and permeate.

According to the reverse osmosis principle and referring in particular to Fig. 3, feed water supplied through the feed conduit 18 as indicated by arrow A is applied to the membrane 16 at a pressure greater than the osmotic pressure. Water passes through the membrane 16 and becomes permeate that is released into the permeate storage tank 17 as indicated by arrow B while dissolved solids in the feed water remain on the application side of the membrane 16 and are eventuality discharged from the concentrate conduit 18a and into a drain conduit 13 as indicated by arrows C and F after passing through a flow control device 25.

As shown in Fig. 3, filtered feed water is fed to the MFTS through the feed conduit 11. The flow manifold or flow block assembly 19 is designed to accommodate multiple flow paths and system controls to the unique design of the MFTS. The flow manifold assembly 19 includes a housing 19a to which the various components shown schematically in Fig. 3 are mounted. In the preferred embodiment, the housing 19a is a molded and machined plastic part in which connecting passages (shown schematically

in Fig. 3) for the various mounted components are molded or machined. Referring also to Figs. 5A-5E, the flow manifold 19 uses an integral normally closed solenoid valve 20 to control the overall on/off flow through the MFTS. The normally closed solenoid valve 20 is connected by the internal flow channel or conduit 20a of the flow manifold 19 to an integrated check valve 21. The check valve 21 only allows water to travel in the direction as indicated by arrow D. The check valve 21 is connected by the internal flow channel or conduit 22 of the flow manifold 19 to a pressure switch 23. This pressure switch 23 translates the water pressure to an electric signal. The pressure switch 23 gives a closed electrical contact above a pressure of 1 bar. Below this pressure, the pressure switch 23 gives an open electrical contact.

All electrical signals are processed by a system controller 119 (Fig. 2), designed to stage all the functions of the MFTS through a software program. Water from the pressure switch is connected by the internal flow channel or conduit 24 of the flow manifold 19 to the feed pump 14 and to the recirculation side of the adjustable flow control element 25. The adjustable flow control element controls the restriction to flow of concentrate to drain and the restriction in the concentrate recycling passage 26. In short, the flow control 25 determines what portion of the concentrate is discharged to drain and what portion is recycled. In the preferred control, when an operator manipulates the flow control, both restrictions are changed proportionately. A full description of the flow control 25 can be found in Appendix 1, which is a copy of the specification of PCT Application PCT/US11/32212, filed April 13, 2011, and is hereby incorporated by reference.

An internal flow channel or conduit 26 of the flow manifold connects to the internal flow channel or conduit 24 of the flow manifold. The drain conduit 13 is connected to the adjustable flow control 25 by the internal flow channel or conduit 27 of the flow manifold 19. Flow direction shown by arrow F, is maintained in the internal flow channel or conduit 27 of the flow manifold due to the pressure differential generated between the adjustable flow control 25 and the drain 13. The inlet to the permeate delivery pump 28 is connected to the permeate storage tank 17 via hose or tubing connection 29. The outlet of the permeate delivery pump 28 is connected to the flow manifold block 19 via hose or tubing connection 61. The flow block accepts pressurized permeate water from the permeate pump 28 via an internal flow channel or

conduit 31 of the flow manifold 19. Flow direction shown by arrow G, from the permeate pump 28 is maintained by the permeate check valve 32. The permeate check valve 32 connects to the flow sensor 33 via an internal flow channel or conduit 34. During low pressure operation as sensed by the low pressure switch 23, or when the permeate storage tank 17 is below the low level switch 35a, an internally integrated normally open solenoid valve 36 allows water to bypass the MFTS by remaining open. The normally open solenoid valve 36 is used to bypass feed water directly to the output 12 when there is insufficient permeate available. When in the open position, the solenoid valve 36 connects the feed conduit 11 to the conduit/passage 39 through an internal flow channel or conduit 37 of the flow manifold 19. Flow direction as shown by arrows H is maintained by in integrated check valve 38 inside the flow block 19.

The electronic control module 119 forms part of the machine shown in Fig. 1C. This controller receives signals from the pressure and flow sensors and in response to these signals controls the operation of the various solenoid valves, pumps, etc., forming part of the unit.

UNIT OPERATIONAND CONTROL

Referring to Figs. 3, and 4, the following digital inputs and digital outputs are utilized to perform the sequence of operations described below. It should be noted that the reference characters shown on the Fig. 4 logic diagram refer to components, sensors, pumps, etc., identified on Fig. 2 and which are affected by the particular decision block.

Digital Inputs

1. Inlet Feed Pressure (23)
2. Low Level (35a)
3. Mid Level (35b)
4. High Level (35c)
5. Flow Switch (33)

Digital Outputs

1. Feed Pump (14)
2. P2 Permeate Pump (28)
3. SV1 Inlet Valve (20)
4. SV2 Bypass Valve (36)

Make Permeate Water

When the tank level is below the mid level sensor (see reference character 35b in Fig. 3), the system wants to fill the tank. The inlet solenoid 20 opens and following a 5 second delay the feed pump 14 starts. The pump runs until the level reaches the high level sensor (see reference character 35c in Fig. 3) at which time the inlet solenoid 20 and feed pump 14 turn off simultaneously.

In the preferred embodiment, the system will not energize the feed pump 14 (to provide pressurized feed water to the membrane assembly 15 if the call for water is being satisfied by bypass water and the permeate tank is at a low level (reference character 35a in Fig. 2).

Call for Water

When the flow switch sensor 33 detects water moving (user opens a valve to call for water) the bypass valve 36 closes and the permeate pump 28 turns on. (If the level is below the mid level detector 135b, the bypass valve 36 will remain open providing bypass water.)

The permeate pump 28 will continue to run until the level falls below low level detector 35a at which time the bypass valve 36 will open and the feed pump 14 will turn off and inlet solenoid 20 will close.

After the call for water has been satisfied (flow switch 33 does not sense flow) the permeate pump 28 turns off and the unit proceeds to make permeate water.

If there is no feed pressure and the call for water is made the unit will deliver permeate water until it reaches low level at which time it will switch to bypass.

Bypass

The unit will be in bypass anytime water is not being called for. This allows the flow sensor 33 to be pressurized. It is this pressure that allows for immediate detection of a call for water that ultimately starts the permeate delivery process.

The unit will also bypass when:

1. the feed pump 14 is running and the level falls below the low sensor (35a in Fig. 3). It will not again deliver permeate until the level rises above the mid level sensor 35b.
2. the call for water is made and the level is below the mid level (35b in Fig. 3).

Dual Operation (Make-up and Delivery)

This unit is inhibited from making RO permeate and delivering bypass water simultaneously. However, when in bypass mode and the tank 17 is below the mid level sensor (35b) the inlet valve 20 will be open to slowly make RO permeate. In this mode the feed pump 14 is not energized and feed water at inlet pressure is communicated through the pump 14 to the membrane assembly15.

Time Delays

There are 4 timers available and are used as follows:

1. the flow rate is determined by monitoring the rate at which the flow sensor 33 changes state due to rotation of the associated turbine 33a (See Fig. 5E). When flow stops, the state of the sensor can be either on or off. A timer is used to indicate that flow has stopped – both on and off – one timer for each condition. (5 second delay)
2. flow delay timer. (5 second delay)
3. Feed Pump on delay. This delays the feed pump 14 from turning on for 5 seconds after the inlet solenoid 20 opens.
4. Pressure loss delay. This delays the feed pump 14 from turning off for 2.5 seconds after pressure loss is detected by the pressure switch 23.

It should be noted here, that in the preferred embodiment, the system controller 119 includes a programmable controller or CPU for performing the various control functions represented schematically in Figs. 3 and 4 and for energizing and de-energizing the various components forming part of the flow block assembly/flow manifold 19. Those skilled in the art will recognize that various programmable controllers can be used to implement the functions. Suitable software compatible with the chosen controller can be used or written by those skilled in the art to perform the operational method steps described above and to control the energization and de-energization of the various control components.

Figs. 5A-5D illustrate the construction of the flow manifold/ block assembly 19 shown in Fig. 2 and that is constructed in accordance with the present invention. Fig. 5E is an exploded view of the flow block assembly 19.

As shown in Figs. 5A-5E, the flow manifold assembly is a self contained, multi-purpose hydraulic control valve with integrated flow/conduit passages. As noted above, the flow manifold assembly 19 includes a housing 19a to which the flow control

devices are directly mounted. The housing is preferably constructed from natural acetal plastic. The necessary passages for fluidly communicating the components mounted to the housing 19a are machined and/or molded into the plastic block.

The design consolidates the unique operating flow paths and control devices of the MFTS, providing the benefit of reduced external connection – which reduces the possibility of leaks, and improves the service characteristics of the entire MFTS.

As shown in Figs. 5A-5D, the flow manifold integrates control components including the normally closed inlet solenoid valve 20, the inlet check valve 21 integrated into the structure of the normally closed solenoid valve, the normally open by-pass solenoid valve 36, the bypass check valve 38 integrated into the structure of the normally open solenoid valve, a low pressure switch 23, the adjustable flow control element 25, a flow meter 33 and a permeate check valve 32 integrated into the flow manifold block assembly 19.

In addition to the integrated control components, the flow manifold block assembly 19, internal makes connections to each control component through internal flow channels or conduits. Conduit/passage connections of the flow manifold are shown in Figs. 2 and 3.

Figs 5A-5E also details the eternal connections made to the flow block 19. The design of the flow block provides a rigid structure for external plumbing connection, reducing the need for additional plumbing supports in the MFTS. External connections made to the flow block include; filtered water inlet 57, permeate inlet 61from permeate delivery pump 28, permeate outlet 59 and drain outlet 58.

Figs. 6A-6E show the membrane module 15. The module 15 includes a membrane tube 70 and two end plates 71a and 71b. A conventional RO membrane 16 is suitably enclosed and held in the membrane tube 70 and between the plates 71a, 71b. The end plates are identical parts, which serve different functions within the Membrane module. The top end plate 71a provides for a fluid connection to the inlet 73 of the module and is connected to the passage 18 shown in Fig. 3. This inlet 73 is pressurized water from the outlet of the feed pump 14 (see Fig. 3). The operating pressure provided to the inlet 73 is rated up to 300 psi. This pressure level provides the needed energy for the reverse osmosis process to take place within the membrane module 15. The bottom end plate 71b provides the concentrate connection 72 to the MFTS and is connected to

the passage 18a shown in Fig. 3. Due to the identical nature of the end block design, this allows the inlet 73 and concentrate 72 ports to be switched, allowing flexibility in the construction and application of the membrane module. To hold the module together while pressurized, a tie rod 76 is used. In addition to the tie rod 76, specialized tie rod nuts 75, 77 are used on the top and bottom of the assembly. The top tie rod nut 77, holds compression on the tie rod, and seals the interior permeate chamber of a standard membrane. The bottom tie rod nut 75, also hold compression on the tie rod, however, holes 75a in the face of the nut, allow permeate water to escape from this nut, into the permeate reservoir tank. To prevent leaking of the housing, a radial O-ring seal 79 is used between the top and bottom end plates 71a and 71b and the housing 70.

Referring to Fig. 3, the membrane 16 used for processing feed water into permeate and concentrate is sized to fit within the passage of the housing 70. The membrane 16 has a generally rolled, cylindrical shape and includes a first end and a second end. The membrane 16 may constitute any conventional membrane commonly used in reverse osmosis units. Alternatively or additionally, the membrane 16 may use a nanofiltration element in order to, for example, soften the feed water.

Fig. 7A-7D show the permeate storage tank 17. The tank is specially shaped to maximize the stored volume of permeate water. The design of the permeate storage tank incorporates features to simplify the assembly of the MFTS. Features include: stand-offs 80 for supporting the membrane assembly 15 from the bottom of the permeate storage tank; top cut-out 81 which holds the membrane module in place; motor recess 83, which creates a consistent air path for cooling of the motor of the MFTS feed pump; a level switch support hole 82, designed to stabilize and hold the level switch device 35; a electrical box support notch 84, to support and secure the electrical box 119 to the MFTS; and, a built in permeate discharge connection 85, allowing a direct connection from the tank to the permeate delivery pump 28 without any additional adapters. The connection 85 fluidly connects to the line 29 shown in Fig. 3. The stand-offs 80 support the membrane assembly 15 above the bottom of the tank 17 and inhibit the formation of stagnant water at the base of the membrane assembly 15. The tank 17 also defines recessed sections for receiving or accommodating the placement of the filter 10 and the permeate delivery pump 28. In this way the overall size of the mobile treatment unit can be reduced or minimized

without sacrificing performance or capability and thus enhancing its mobility and functionality. As indicated above, the membrane assembly 15 is located and supported within the permeate tank 17. The permeate tank communicates with the atmosphere and, thus, the permeate in the tank is not pressurized. Permeate leaving the membrane assembly 15 directly enters the tank. The location of the membrane assembly 15 within the tank provides several advantages. First of all, it simplifies flushing of the membrane after shut-down.

Typically, a reverse osmosis membrane is flushed after shutdown with permeate water or filtered feed water to remove the high concentration of dissolved salts on the concentrate side of the membrane (see Ellis, III, U.S. patent 4,629,568). This flushing removes those salts that are at or near their saturation concentration and thus prevents the membrane from fouling or scaling with crystallized salts such as calcium carbonate. Another benefit to flushing the membrane after shutdown is the prevention of "salt creep". Salt creep occurs when an RO system is shut down and there is no pressure on the feed or concentrate side of the membrane. The dissolved solids diffuse from a region of high concentration on the concentrate side through the membrane to a region of low concentration on the product side during shutdown. When the RO system is restarted, there is a temporary spike in TDS (total dissolved solids) in the product or permeate water until the RO system can flush the dissolved solids out.

In prior art, the permeate flush has been handled in one of the following ways. Permeate for flushing is collected in a hydro-pneumatic or water-over-water storage tank and the pressure from the pre-charged air storage tank or feed water pressure on one side of the bladder provides the driving force for the permeate flush. During shutdown, the permeate stored in the bladder tank is used to flush the membrane. Similarly, permeate water can be stored in an atmospheric storage tank and during a shutdown, can be pumped with a repressurization pump to dilute the concentration of dissolved salts on the concentrate side of the membrane. One last method of flushing during shutdown is accomplished by simply leaving the feed solenoid valve open after the high pressure pump is shut down and opening the concentrate valve fully or a second flush valve on the concentrate/drain line. During any of these three methods, the rinse should continue until the concentrate conductivity is less than or equal to the feed water conductivity.

In the aforementioned flushing techniques, the permeate or feed water flush occurs on the concentrate side of the membrane tangential to the surface of the membrane. Referring to Figs. 3 and 8A-8D, the rinse technique in the preferred embodiment of this invention operates differently because the membrane 16 is submerged in the permeate storage tank 17 so that permeate is produced against zero back pressure thus maximizing permeate production. When the high pressure pump 14 is turned off, permeate from the storage tank flows back through the membrane 16 due to the natural osmotic pressure of the system (water flows through a semi-permeable membrane to the side with more dissolved solids to even out the osmotic pressure on each side of the membrane). This reverse permeate rinse will continue until there is no more driving force (i.e., the concentration of dissolved solids on each side of the membrane has reached equilibrium).

At shut-down, the RO pressure pump 14 is de-energized, and the solenoid valve 20 is closed. Referring also to Fig. 8C, because the concentrate side of the membrane 15 is connected to the drain 13 via the flow control 25 and passage 27, the concentrate side of the membrane depressurizes. This depressurization will allow the natural osmotic pressure of the system to cause permeate to flow through the membrane and into the concentrate side of the membrane assembly 15, where it dilutes the concentrate which is then discharged to the drain 13, thus flushing the membrane.

From the above description of the invention, those skilled in the art will perceive improvements, changes and modifications.

Having described the invention, the following is claimed:

1. A mobile fluid treatment system, comprising:
   a) structure supporting a permeate tank, a reverse osmosis membrane assembly, a feed pump for delivering water to be treated to said membrane assembly and a permeate pump for delivering permeate from said permeate tank;
   b) said structure further defining an inlet for receiving feed water, an outlet for delivering feed water or permeate, depending on predetermined operating conditions and a drain for discharging concentrate from said membrane housing;
   c) a fluid treatment control subsystem including a fluid passage controlled by a first control valve for connecting feed water at said inlet to said outlet under predetermined operating conditions;
   d) a flow sensor for detecting fluid flow from said outlet;
   e) a second fluid control valve for communicating feed water to said feed pump when said flow sensor does not detect flow from said outlet and said permeate tank is below a predetermined level;
   f) a flow restrictor for controlling the rate at which concentrate flows from said membrane assembly to said drain; and,
   g) said first and second control valves, said flow sensor and said flow restrictor all being mounted in, and supported by, a common housing, said housing defining integral passages for fluidly communicating said valves, said flow sensor and said adjustable flow restrictor.

3. The system of claim 1 wherein said flow restrictor is adjustable and concurrently controls the amount of concentrate recirculated to an inlet to said feed pump.

4. The system of claim 1 wherein said tank mounts a plurality of level switches for detecting high level, mid level and low level conditions of permeate in said tank.

5. The system of claim 1 wherein said tank defines a recess for a feed pump motor, said recess creating, at least in part, flow path of cooling air to said feed pump motor.

6. The system of claim 1 wherein said tank includes internal stand-offs for supporting said reverse osmosis membrane assembly within said tank, a base of said membrane assembly supported above the bottom of said permeate tank.

7. The system of claim 1 wherein said tank includes structure for supporting said membrane assembly within said tank and further includes tank structure for providing a mount for an electrical control box and defining permeate pump recess for receiving at least a portion of said permeate pump.

8. The system of claim 7 wherein said tank defines a filter recess for at least partially receiving a feed water filter.

9. A method for operating a mobile fluid treatment system, comprising the steps of:

a) providing structure mounting a permeate tank, a feed pump, a permeate pump and an RO membrane assembly;

b) providing a an electrically actuated fluid bypass control valve for communicating a feed water inlet with a water outlet;

c) monitoring fluid flow from said outlet;

d) upon detecting flow from said outlet, closing said bypass fluid control valve to interrupt communication between said feed water inlet and said outlet and, under predetermined operating conditions, energizing said permeate pump to deliver permeate from said permeate tank to said outlet.

e) upon detecting a predetermined low level of permeate in said permeate tank, actuating said fluid bypass control valve in order to communicate the feed water inlet with said water outlet while concurrently communicating feed water at said inlet to said RO membrane assembly while de-energizing said feed pump in order to allow feed water at inlet pressure to be processed by said RO membrane assembly.

10. The method of claim 9 further comprising the steps of monitoring the level of permeate in said permeate tank while concurrently monitoring whether fluid flow from said outlet is occurring and, upon detecting absence of flow from said outlet, energizing said feed pump while communicating feed water at said inlet to said feed pump whereby water to be treated is supplied under pressure to said RO membrane assembly until permeate reaches a predetermined level in said tank.

11. The method of claim 10 wherein said feed water is communicated to said feed pump through a normally closed fluid control valve and said fluid bypass valve is a normally open fluid control valve..

12. The method of claim 10 further comprising the steps of mounting said membrane assembly within said tank, a permeate outlet of said membrane assembly communicating directly with an interior of said permeate tank and flushing said membrane assembly by de-energizing said feed pump while allowing concentrate in said membrane assembly to flow to a drain through a restricted passage, thereby allowing permeate in said tank to travel from a permeate side of an RO membrane forming part of said membrane assembly to a concentrate side of said RO membrane and then to said drain.

13. The system of claim 3 wherein said adjustable flow restrictor comprises:

an outer sleeve that extends along an axis and includes an input opening for receiving the fluid to be treated and at least two first flow control openings, each of the first flow control openings directing a portion of the fluid to an output of the flow control apparatus; and

an inner sleeve positioned within the outer sleeve and including an input opening associated with the input opening of the outer sleeve for receiving the fluid to be treated and at least two second flow control openings, each of the second flow control openings cooperating with one of the first flow control openings to define a first orifice and a second orifice;

wherein the inner sleeve is rotatable relative to the outer sleeve about the axis to simultaneously adjust the cross-sectional area of the first orifice and the cross-sectional area of the second orifice to control fluid flow through the first and second orifices to the outputs of the flow control apparatus.

14. The system of claim 13 wherein the combined fluid flow rate through the first orifice and the second orifice is constant regardless of the angular position of the inner sleeve relative to the outer sleeve.

15. The system of claim 13, wherein the combined resistance to fluid flow through the first orifice and the second orifice is constant regardless of the angular position of the inner sleeve relative to the outer sleeve.

16. The system of claim 13 further comprising a flange for connecting the inner sleeve to the outer sleeve, the flange including a series of teeth that mate with teeth on the inner sleeve for selectively maintaining the inner sleeve in a desired angular position relative to the outer sleeve.

17. The system of claim 13 further including a first check valve integrally mounted with said flow sensor.

18. The system of claim 13 wherein said flow sensor includes a turban rotatable by water flowing to said outlet.

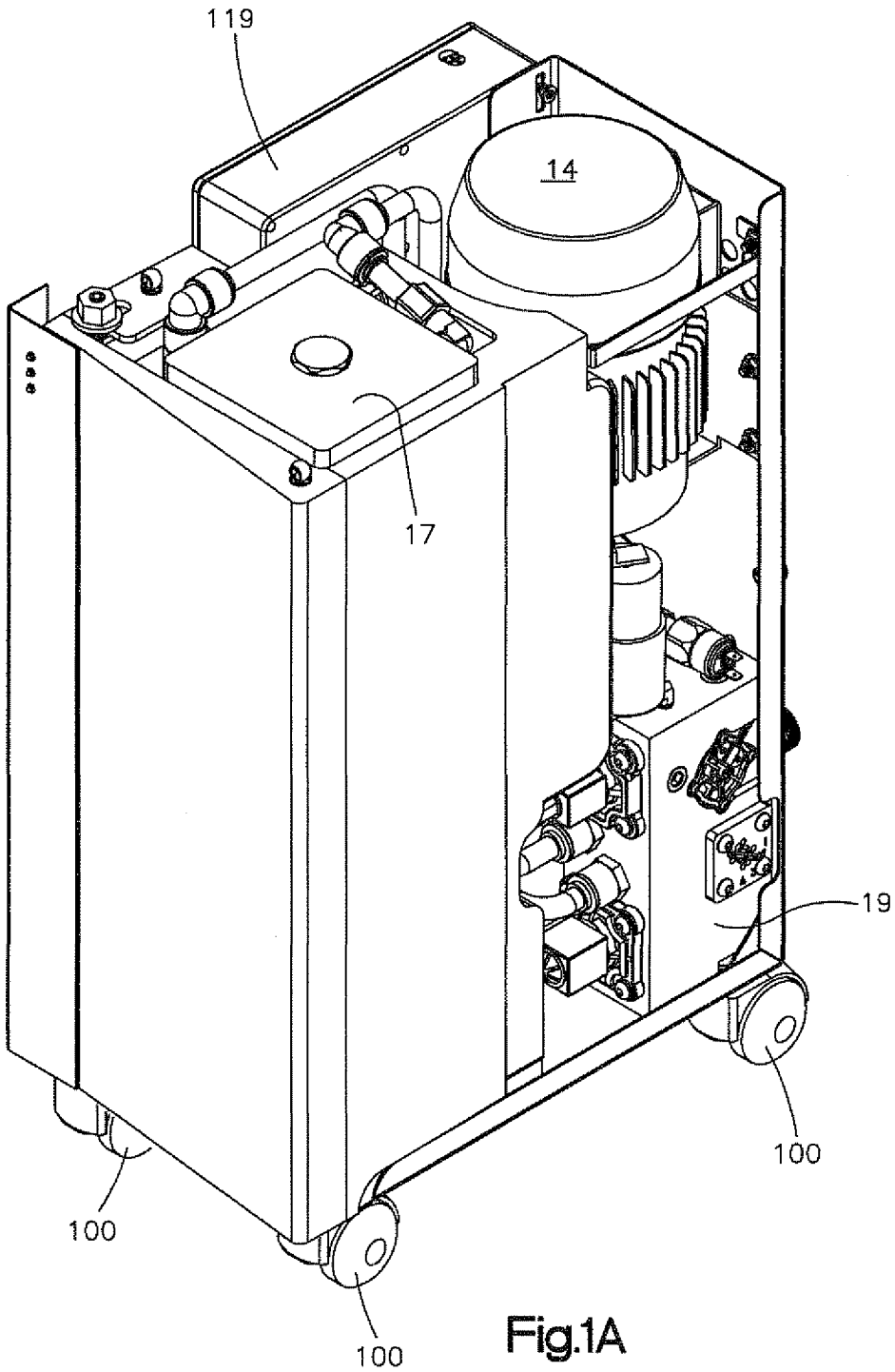

Fig.1A

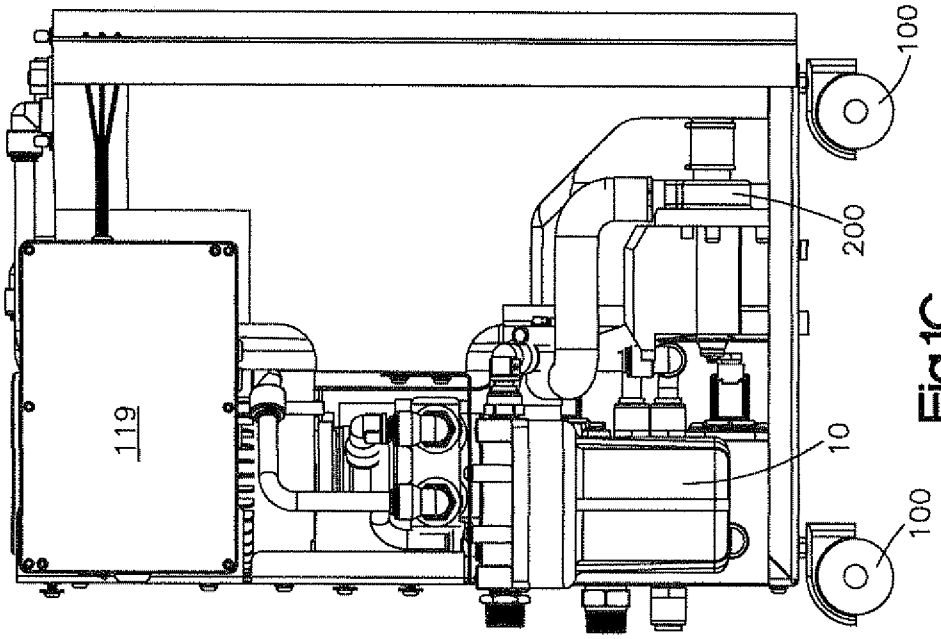

Fig.1C

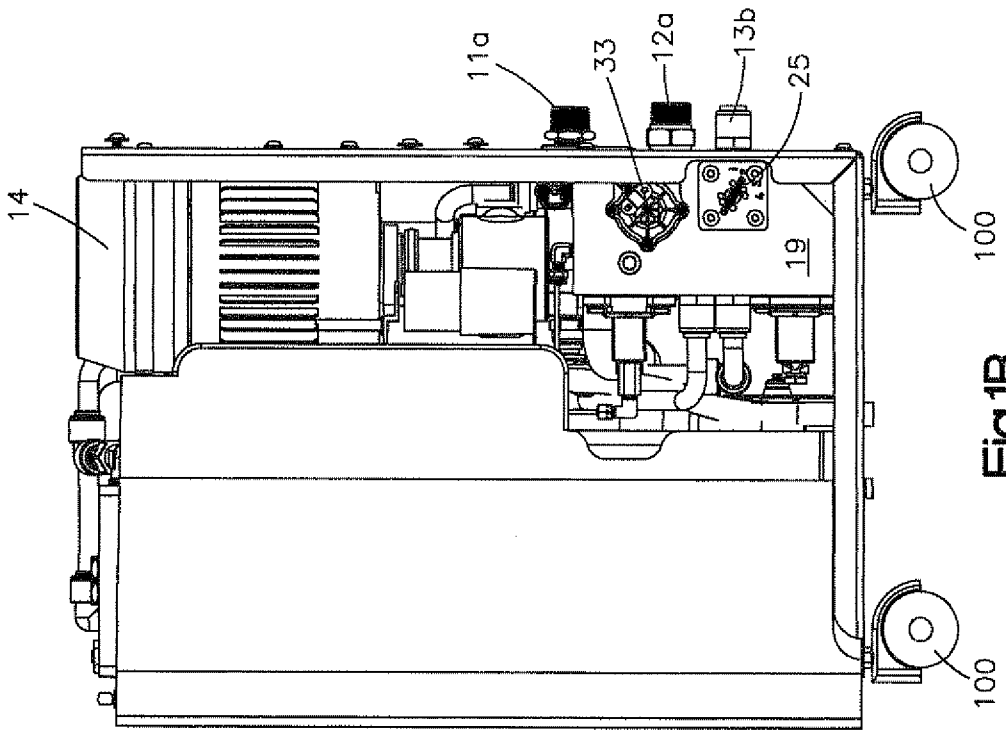

Fig.1B

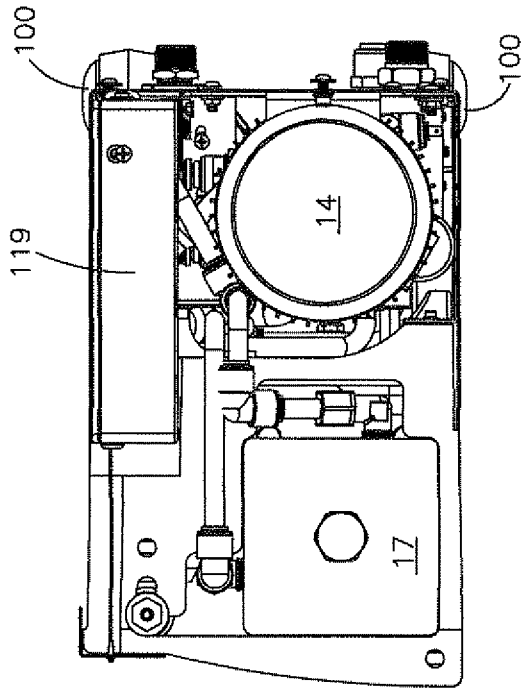

Fig.1E

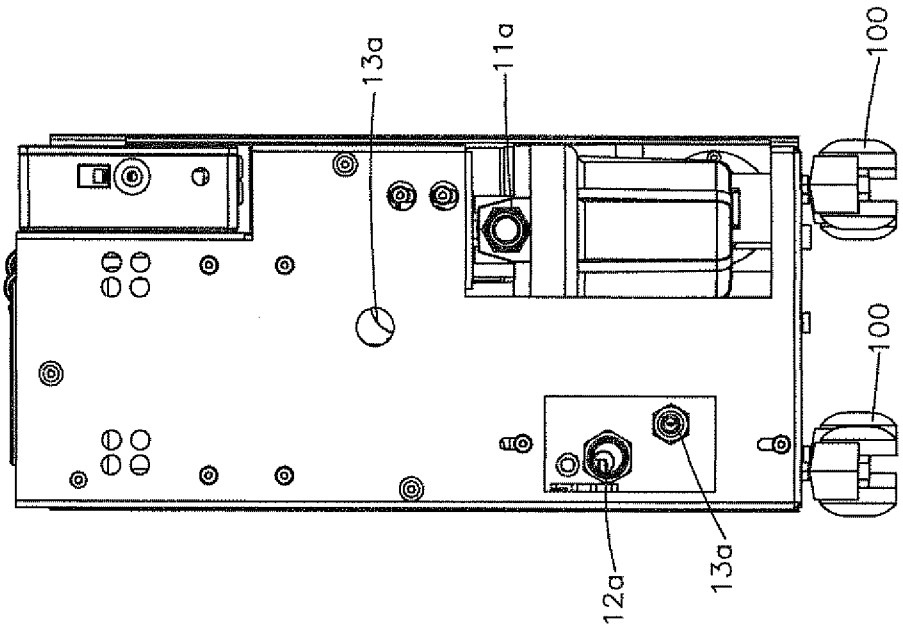

Fig.1D

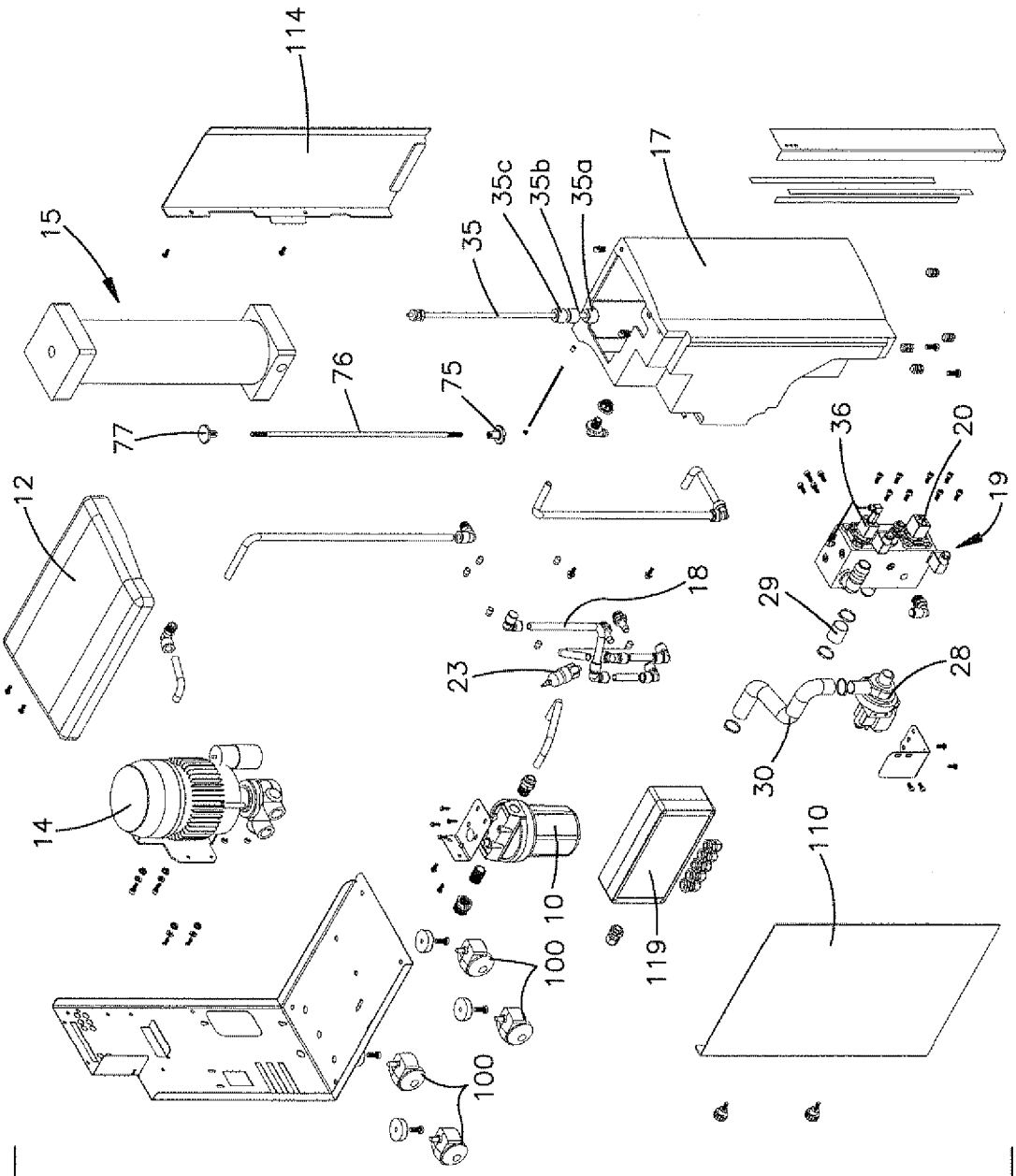
114
15
35
35c
35b
35a
17
76
75
77
12
36
20
19
18
29
23
28
30
14
10
100
119
110
100

Fig.2

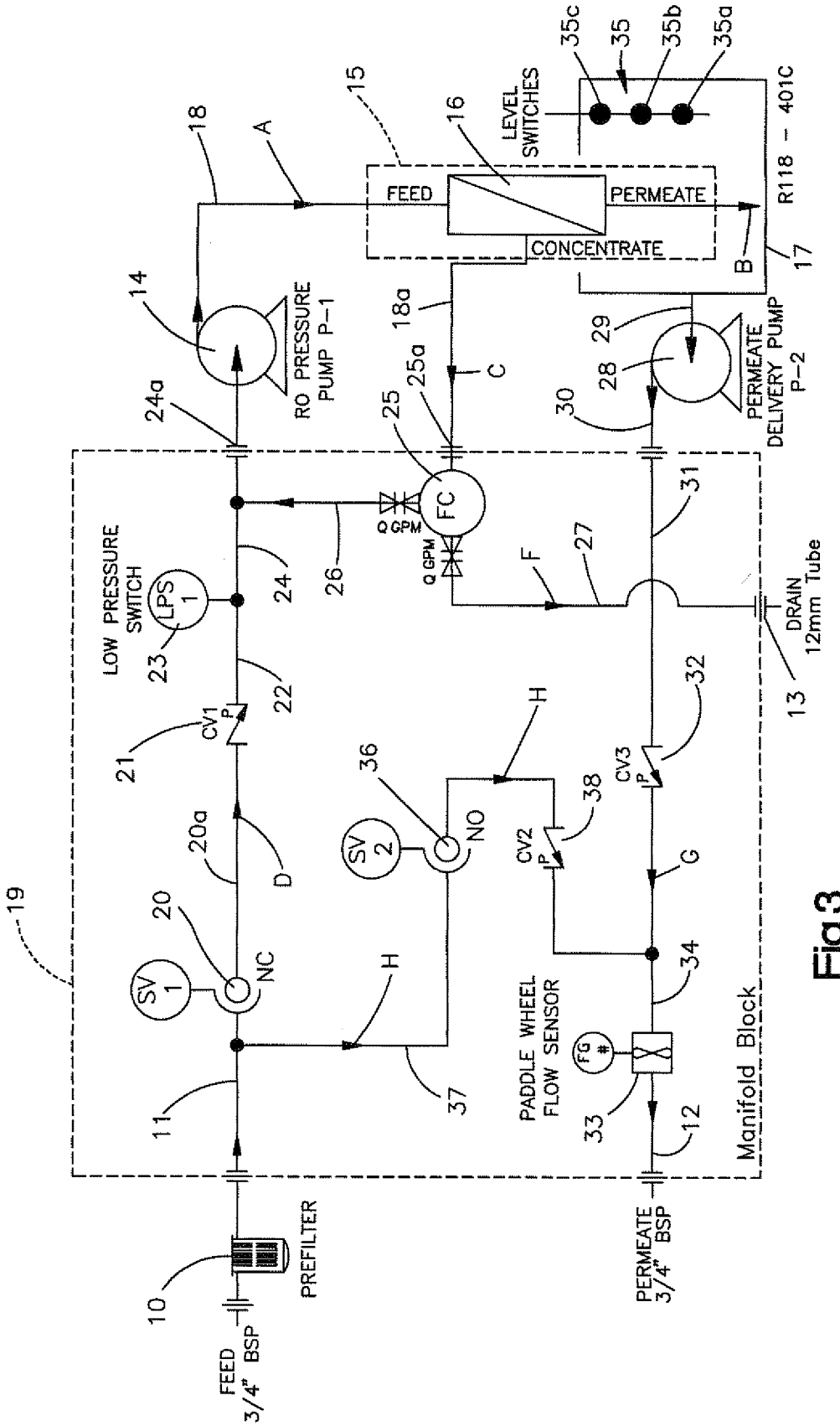
FEED
PERMEATE
CONCENTRATE
LEVEL SWITCHES
R118 - 401C
RO PRESSURE PUMP P-1
PERMEATE DELIVERY PUMP P-2
LOW PRESSURE SWITCH
DRAIN 12mm Tube
PADDLE WHEEL FLOW SENSOR
Manifold Block
PREFILTER
FEED 3/4" BSP
PERMEATE 3/4" BSP
Q GPM
NC
NO
CV1
CV2
CV3
SV 1
SV 2
LPS 1
FC
FG #

Fig.3

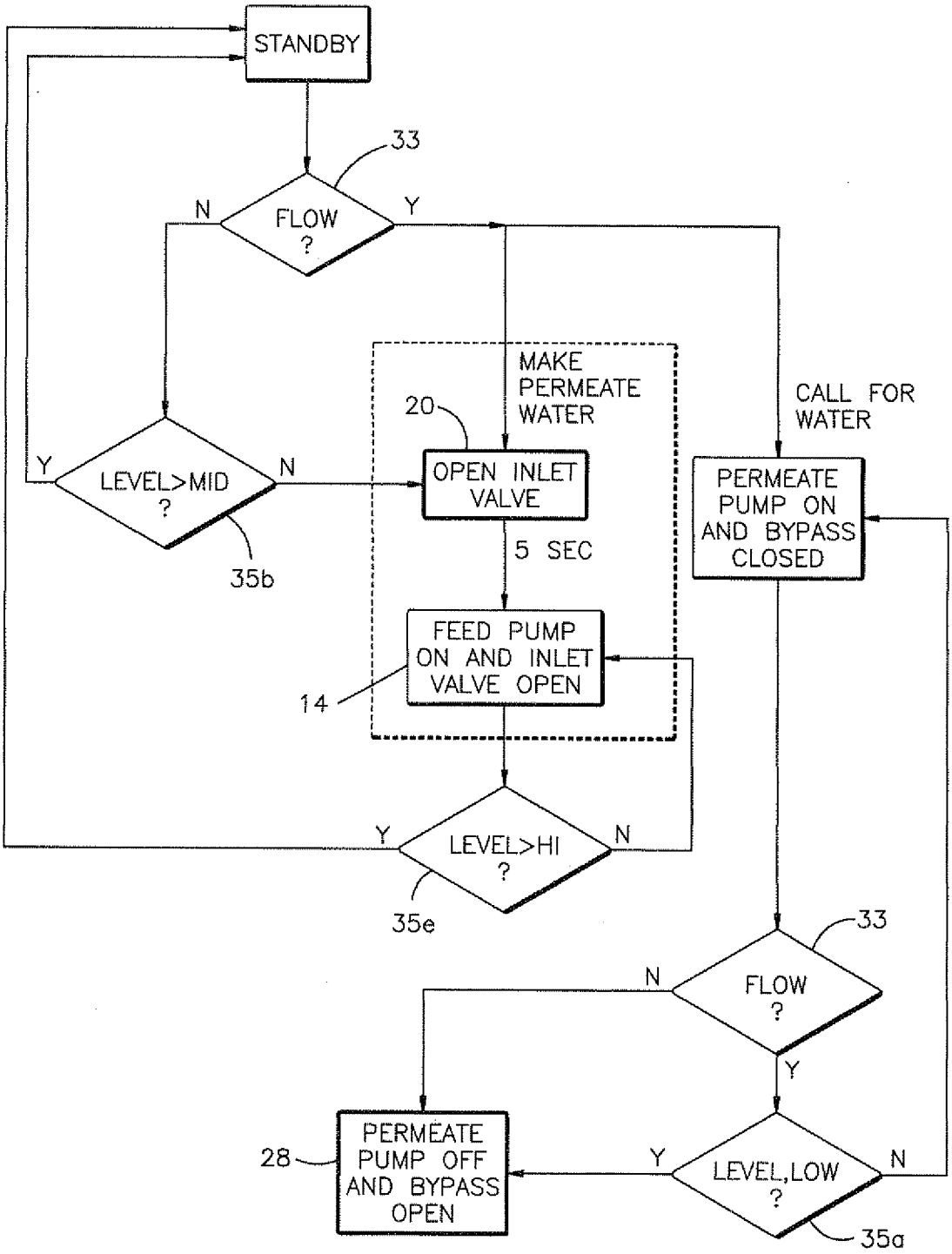
STANDBY
33
FLOW ?
N
Y
MAKE PERMEATE WATER
20
OPEN INLET VALVE
5 SEC
FEED PUMP ON AND INLET VALVE OPEN
14
LEVEL>MID ?
Y
N
35b
LEVEL>HI ?
Y
N
35e
CALL FOR WATER
PERMEATE PUMP ON AND BYPASS CLOSED
33
FLOW ?
N
Y
LEVEL,LOW ?
Y
N
35a
PERMEATE PUMP OFF AND BYPASS OPEN
28

Fig.4

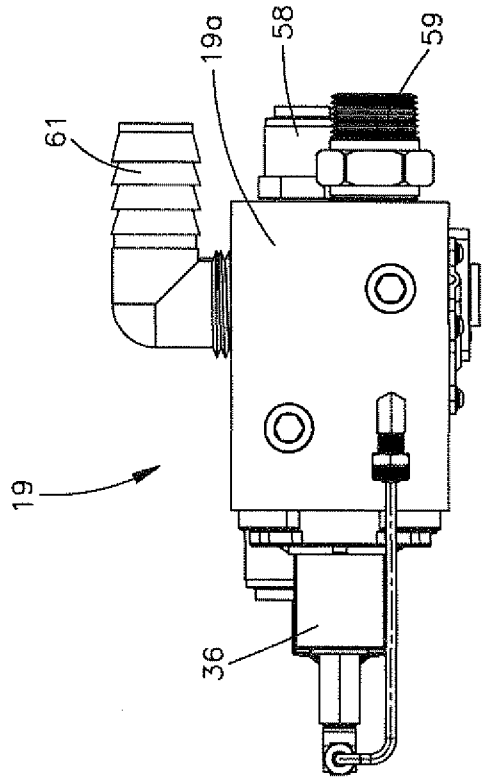

Fig.5B

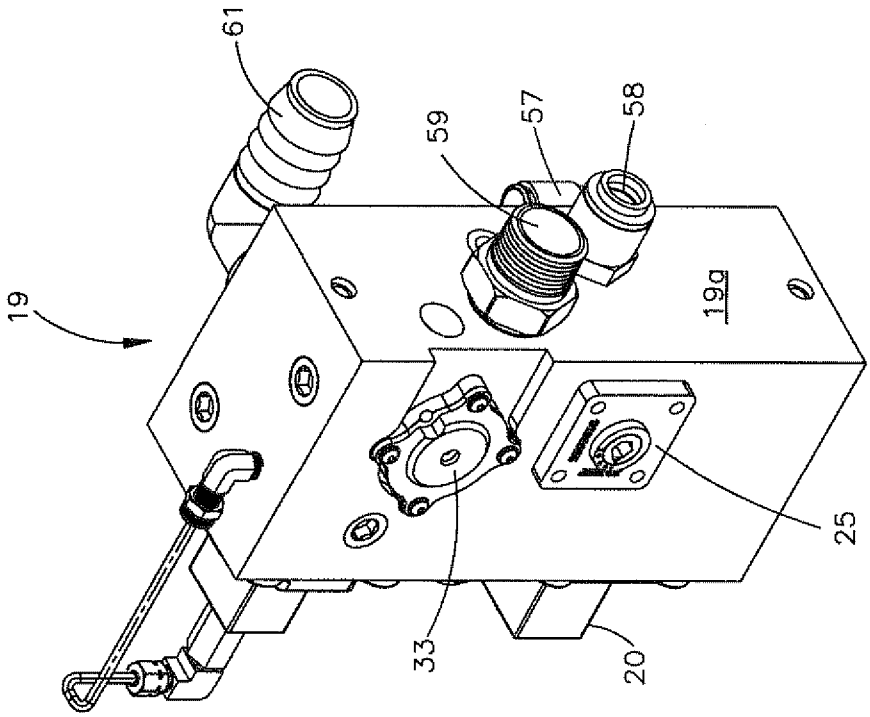

Fig.5A

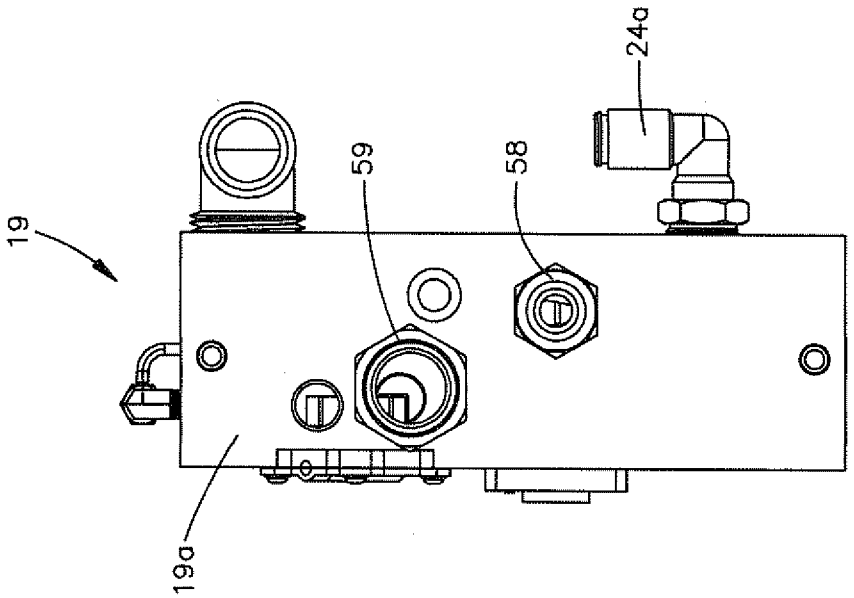

Fig.5D

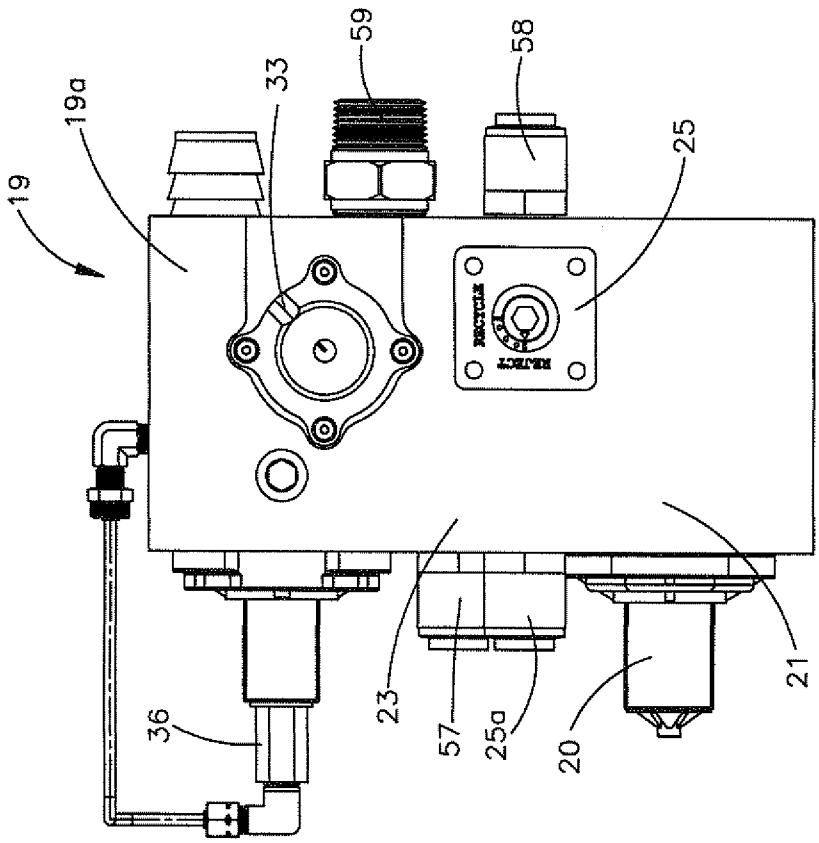

Fig.5C

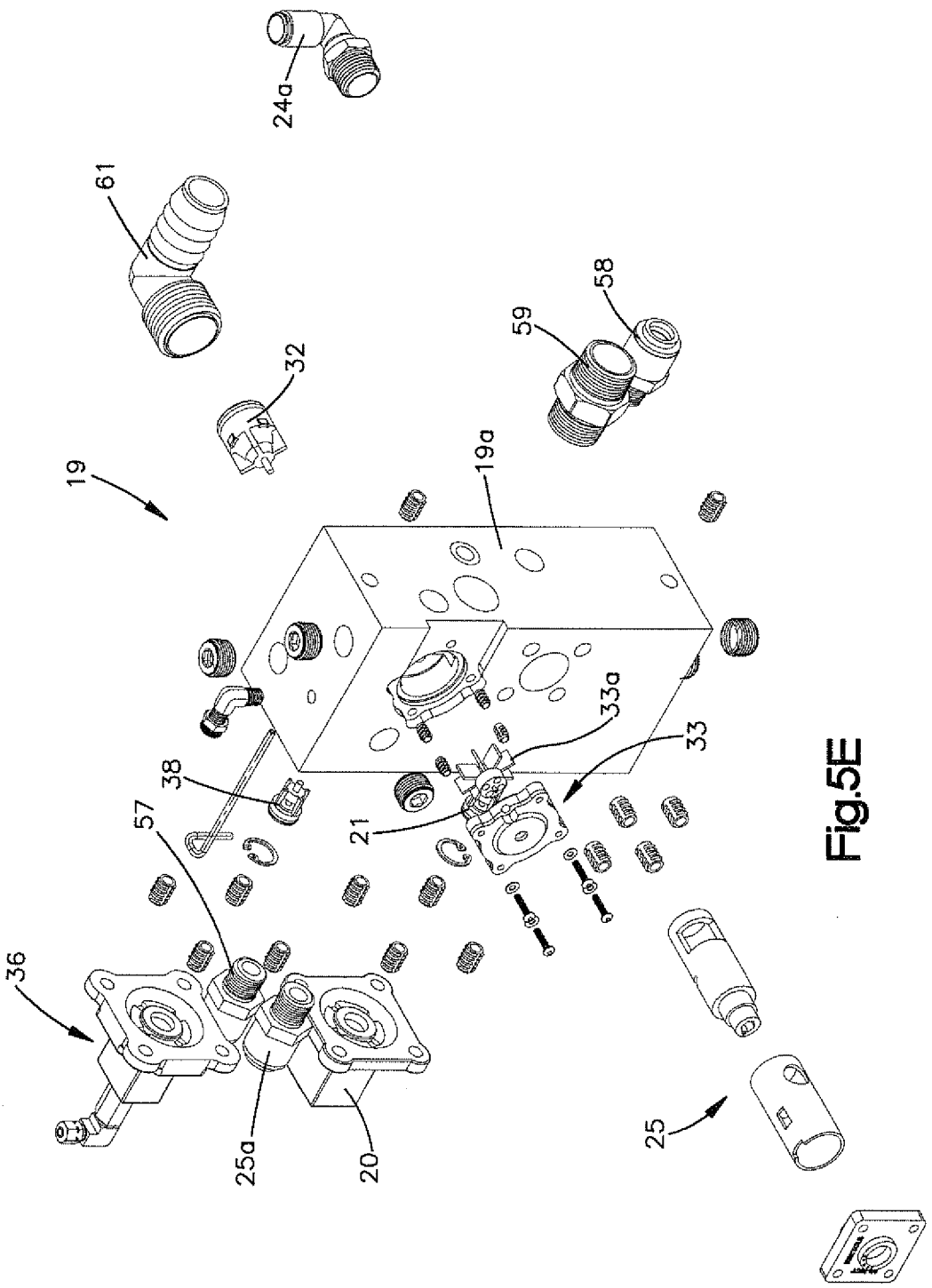

Fig.5E

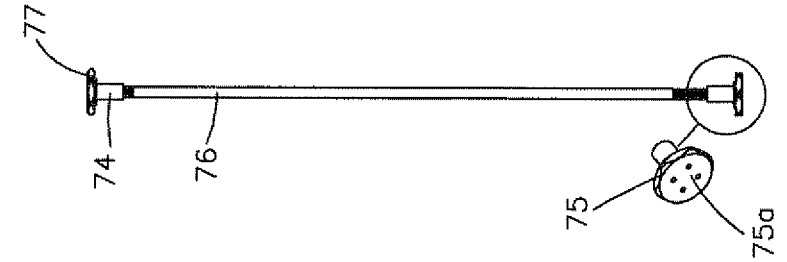

Fig.6E

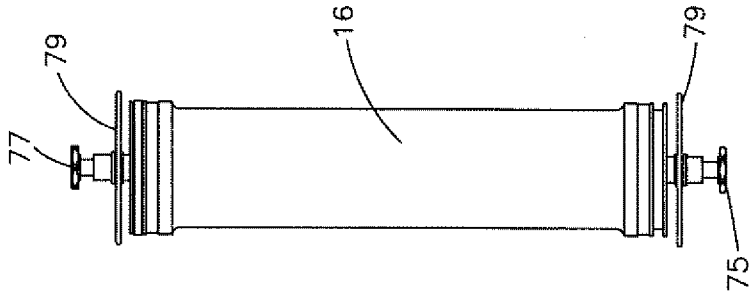

Fig.6D

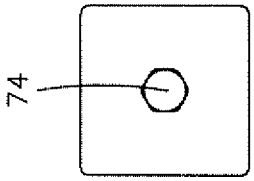

Fig.6C

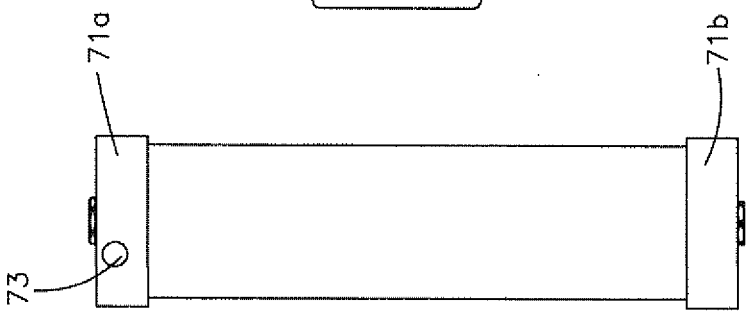

Fig.6B

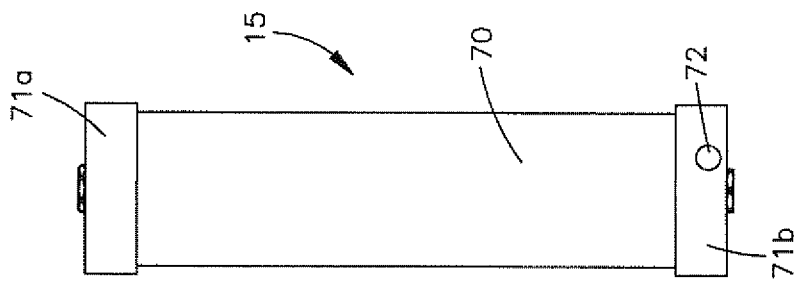

Fig.6A

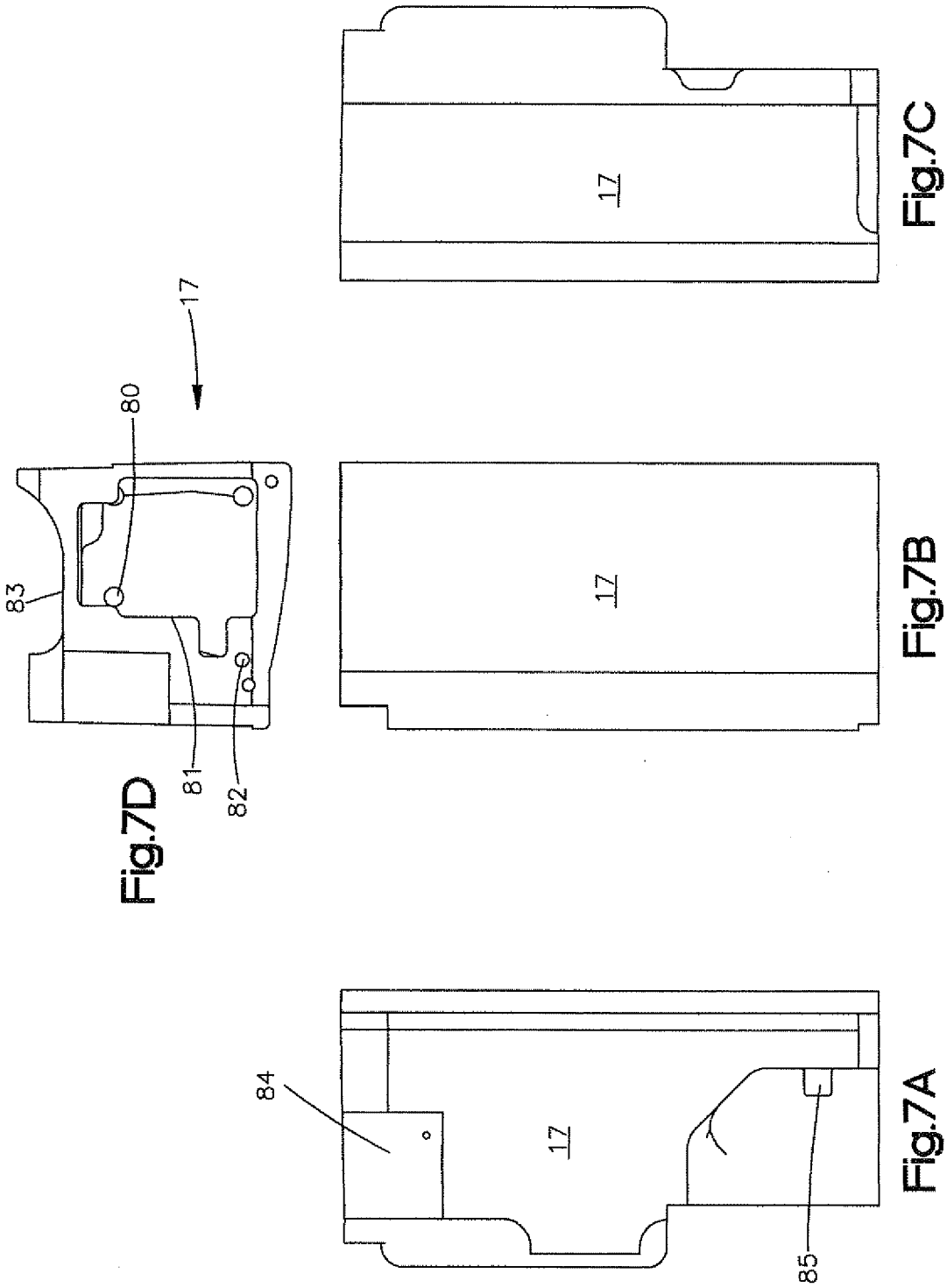

Fig.7C

Fig.7B

Fig.7D

Fig.7A

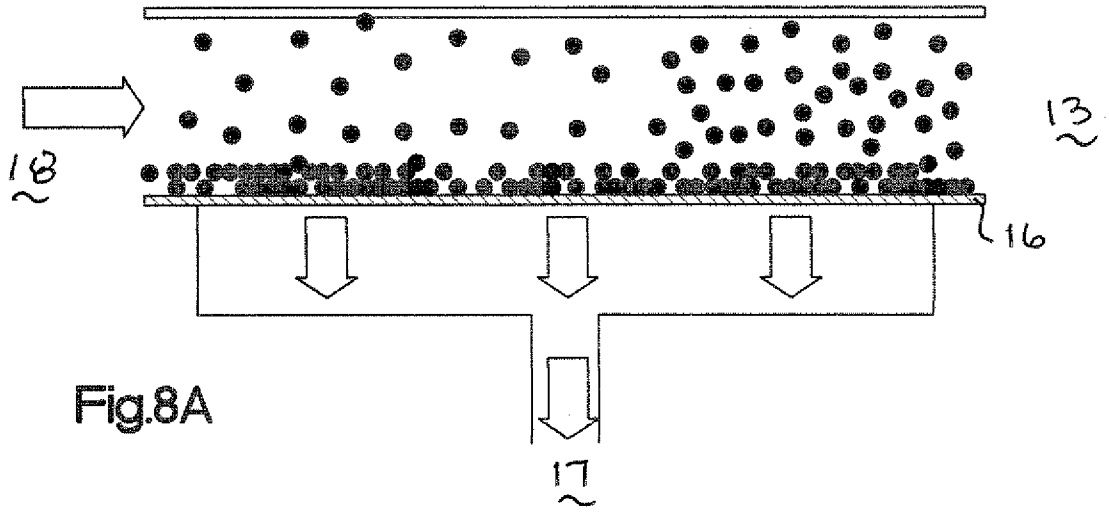

Fig.8A

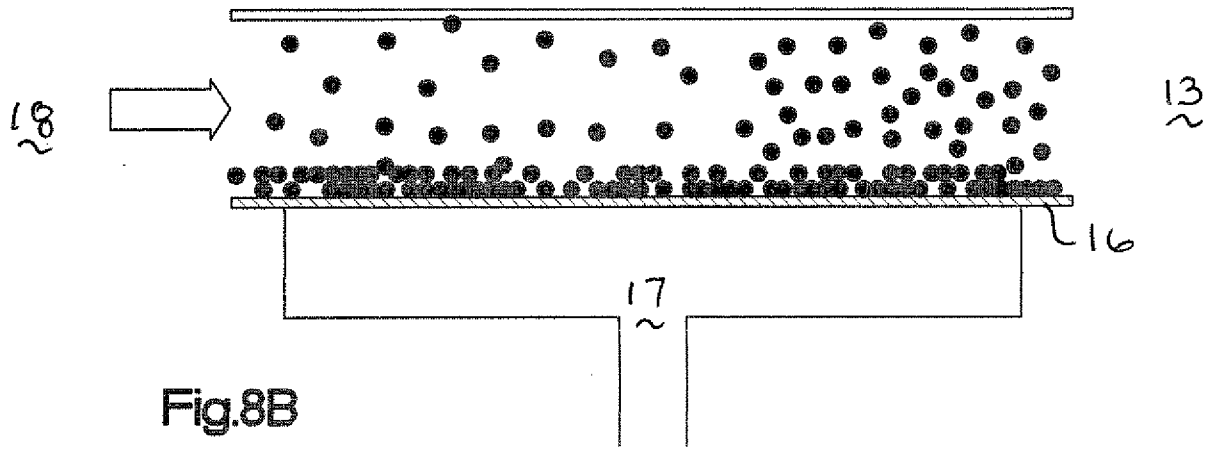

Fig.8B

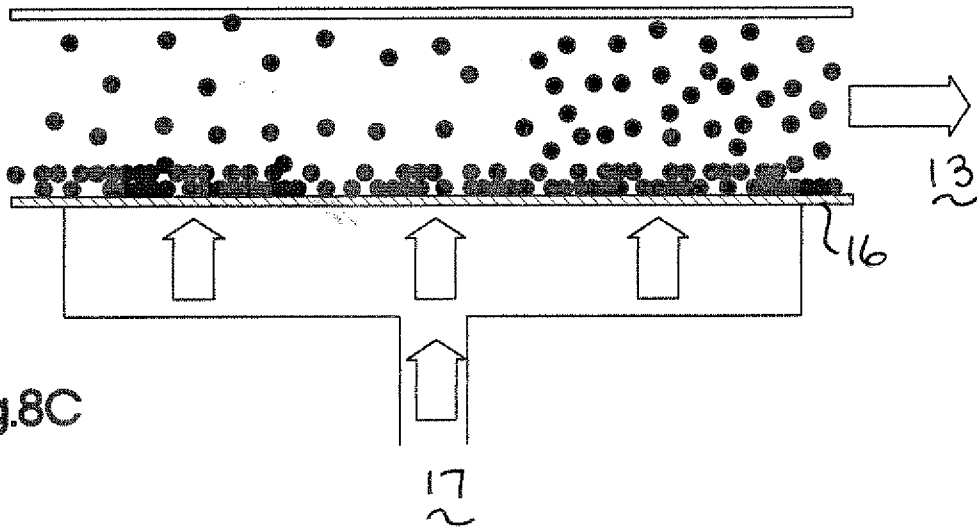

Fig.8C

INTERNATIONAL SEARCH REPORT

International application No.
PCT/US 11/32513

A. CLASSIFICATION OF SUBJECT MATTER
IPC(8) - C02F 1/44 (2011.01)
USPC - 210/739; 210/133
According to International Patent Classification (IPC) or to both national classification and IPC

B. FIELDS SEARCHED

Minimum documentation searched (classification system followed by classification symbols)
IPC(8): C02F 1/44 (2011.01); USPC: 210/739; 210/133

Documentation searched other than minimum documentation to the extent that such documents are included in the fields searched
USPC: 210/739; 210/133

Electronic data base consulted during the international search (name of data base and, where practicable, search terms used)
Google Scholar, Google Patents, PubWEST (PGPB,USPT,EPAB,JPAB) (permeate, reverse, osmosis, membrane, pump, inlet, outlet, valve, sensor, restrictor, flow, manifold, wheel, mobile, signal, control, pressure, water, level, switch, bypass, solenoid, storage, tank, sleeve, rotate, orifice, flange, connect, turbine, flange, teeth)

C. DOCUMENTS CONSIDERED TO BE RELEVANT

Category*	Citation of document, with indication, where appropriate, of the relevant passages	Relevant to claim No.
Y	US 2005/0139530 A1 (Heiss) 30 Jun 2005 (30.06.2005) Figures 1-2, paragraphs [0018], [0024], [0027], [0033]	1, 3-18
Y	US 2007/0295650 A1 (Yoneda, et al.) 27 Dec 2007 (27.12.2007) Figure 1, paragraphs [0022]-[0029], [0035]-[0045], [0065]-[0072], [0077]-[0087]	1, 3-18
Y	US 5,178,734 A (Palmer) 12 Jan 1993 (12.01.1993) Figures 2-3, column 3, line 6-10, line 28-38, line 54-57, column 4, line 34-48	5-8
Y	US 5,971,297 A (Sesser) 26 Oct 1999 (26.10.1999) Figures 1-2, column 2, line 13-19, line 41-46, column 3, line 17-20, line 32-40, line 49-55, column 4, line 28-31, column 5, line 37-41, column 6, line 9-22	13-18

☐ Further documents are listed in the continuation of Box C. ☐

* Special categories of cited documents:
"A" document defining the general state of the art which is not considered to be of particular relevance
"E" earlier application or patent but published on or after the international filing date
"L" document which may throw doubts on priority claim(s) or which is cited to establish the publication date of another citation or other special reason (as specified)
"O" document referring to an oral disclosure, use, exhibition or other means
"P" document published prior to the international filing date but later than the priority date claimed
"T" later document published after the international filing date or priority date and not in conflict with the application but cited to understand the principle or theory underlying the invention
"X" document of particular relevance; the claimed invention cannot be considered novel or cannot be considered to involve an inventive step when the document is taken alone
"Y" document of particular relevance; the claimed invention cannot be considered to involve an inventive step when the document is combined with one or more other such documents, such combination being obvious to a person skilled in the art
"&" document member of the same patent family

Date of the actual completion of the international search	Date of mailing of the international search report
14 Jun 2011 (14.06.2011)	22 JUN 2011

Name and mailing address of the ISA/US	Authorized officer:
Mail Stop PCT, Attn: ISA/US, Commissioner for Patents P.O. Box 1450, Alexandria, Virginia 22313-1450 Facsimile No. 571-273-3201	Lee W. Young PCT Helpdesk: 571-272-4300 PCT OSP: 571-272-7774