(No Model.)

2 Sheets—Sheet 1.

F. HEDLEY.

RAILWAY CAR TRUCK.

No. 590,982. Patented Oct. 5, 1897.

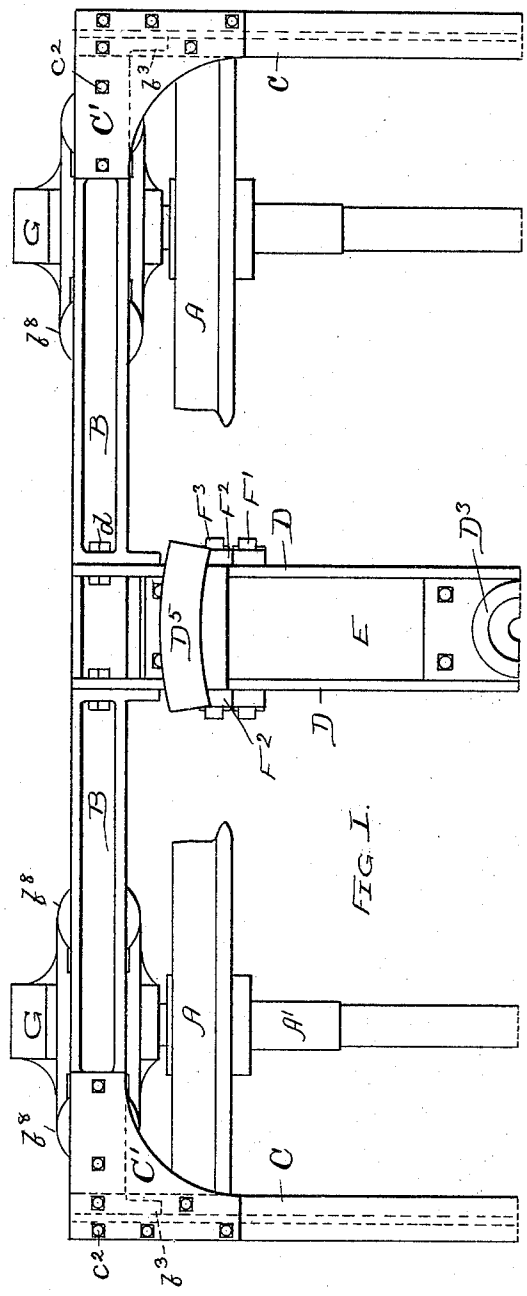

FIG. 1.

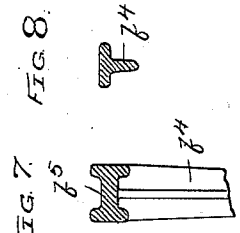

FIG. 8.

FIG. 7.

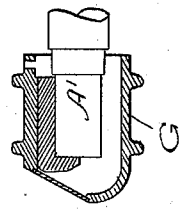

FIG. 6.

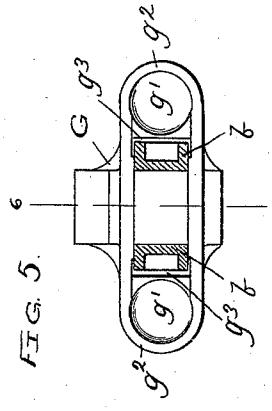

FIG. 5.

WITNESSES:

Sew. E. Curtis

A. M. Munday.

INVENTOR:

FRANK HEDLEY

BY Munday, Evarts & Adcock.

HIS ATTORNEYS.

THE NORRIS PETERS CO., PHOTO-LITHO., WASHINGTON, D. C.

(No Model.) 2 Sheets—Sheet 2.

F. HEDLEY.

RAILWAY CAR TRUCK.

No. 590,982. Patented Oct. 5, 1897.

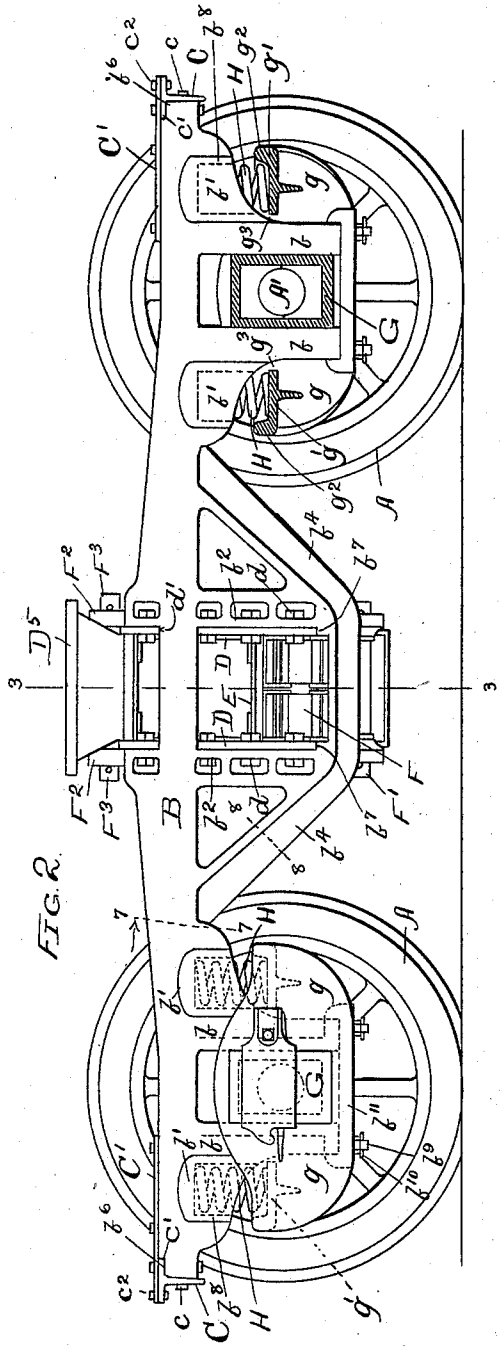

FIG. 2.

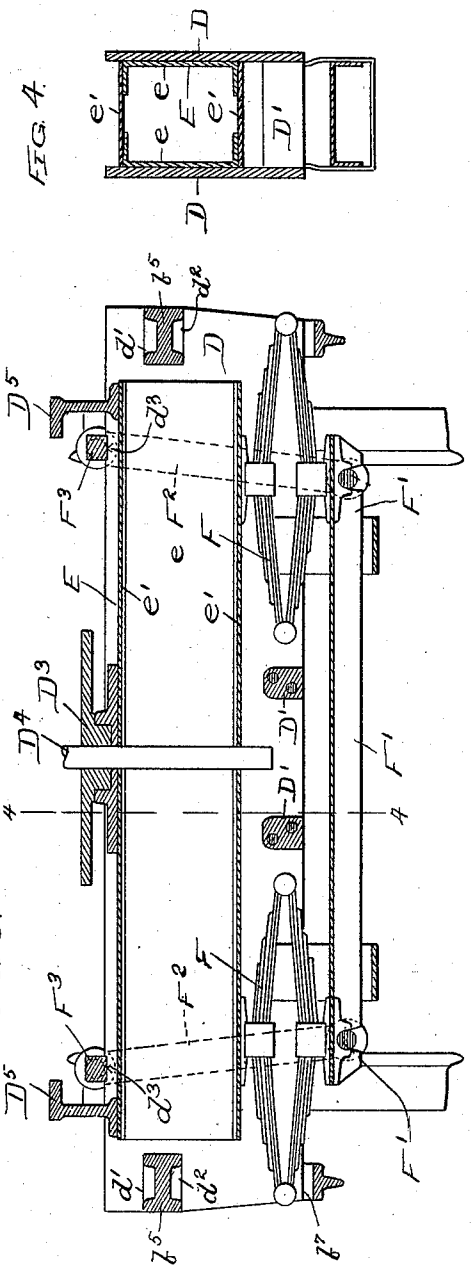

FIG. 3.

FIG. 4.

WITNESSES:
Sew. E. Curtis
R. W. Munday.

INVENTOR:
FRANK HEDLEY
BY Munday, Evarts & Adcock.
HIS ATTORNEYS.

THE NORRIS PETERS CO., PHOTO-LITHO., WASHINGTON, D. C.

UNITED STATES PATENT OFFICE.

FRANK HEDLEY, OF CHICAGO, ILLINOIS.

RAILWAY-CAR TRUCK.

SPECIFICATION forming part of Letters Patent No. 590,982, dated October 5, 1897.

Application filed April 16, 1897. Serial No. 632,461. (No model.)

To all whom it may concern:

Be it known that I, FRANK HEDLEY, a citizen of the United States, residing in Chicago, in the county of Cook and State of Illinois, have invented a new and useful Improvement in Railway-Car Trucks, of which the following is a specification.

My invention relates to railway-car trucks.

The object of my invention is to provide a railway-car truck of a simple, strong, and efficient construction, which at the same time will afford a maximum amount of space or room for the accommodation of electric, compressed air, or other motors that may be required to be mounted thereon between the car-axles and the transverse bolster-carrying plates.

The car-truck embodying my invention comprises in coöperative organization or combination, first, a pair of truck side pieces, each having formed integral therewith pedestal jaws or columns for receiving the journal-boxes of the axles, seats for the coil-springs, pillows or vertical columns or flanges to receive the cross-plates of the truck-bolster, and also traverse flanges at the ends thereof for receiving the end pieces of the truck-frame; second, the truck-frame end pieces secured to and stepped upon the ends of the truck side pieces; third, a truck-bolster comprising a pair of cross-plates set edgewise and bolted or otherwise secured to the pillows or upright-column flanges on the truck side pieces, and taking a bearing at each end or top of the truck side pieces and also near the bottom of the pillows, and between which edgewise truck-bolster plates a swinging bolster is adapted to be received, these transverse truck bolster plates being tied together near their middle by filler castings or blocks; fourth, a swinging bolster fitting between the edgewise truck-bolster plates and supported by hanger-pins resting on top of the edgewise truck-bolster plates; fifth, elliptic springs interposed between the swinging bolster and the supporting-bar beneath, which is connected to the hangers; sixth, axle-boxes having extended flanges and provided with two spring-seats adapted to receive and surround the coil-springs at their outer ends; seventh, coil-springs setting on top of the spring-seats which are integral with the axle-boxes and received at their upper ends in the corresponding spring-seats that are integral with the truck-frame side pieces, the integral pedestal-jaws on the truck-frame side pieces projecting down through suitable openings formed in the axle-boxes.

My invention also consists in the novel construction of parts and devices and in the novel combinations of parts and devices herein shown and described, and specified in the claims.

In the accompanying drawings, forming a part of this specification, and in which similar letters of reference indicate like parts in all the views, Figure 1 is a plan view of a railway-car truck embodying my invention, for convenience only one side or half of the truck being shown, the other duplicate half or side of the truck being omitted. Fig. 2 is a side elevation. Fig. 3 is a central vertical transverse section on the line 3 3 of Fig. 2. Fig. 4 is a detail section on the line 4 4 of Fig. 3. Fig. 5 is a detail plan view of the axle-box, showing the coil-spring seats formed integral therewith and the pedestal-jaws in horizontal section. Fig. 6 is a detail section on the line 6 6 of Fig. 5; and Figs. 7 and 8 are detail sections of the truck side piece on lines 7 7 and 8 8, respectively, of Fig. 2.

In the drawings, A A represent the wheels of a car-truck, and A′ A′ the axles. The truck side pieces B are formed of cast-steel and have cast integrally therewith, and forming a part thereof, pedestal jaws or columns b b, spring-seats b' b', central pillows or vertical columns or flanges b^2 b^2, and transverse flanges b^3 at their ends. The truck side pieces B also have integral tie or brace members b^4 integrally uniting the lower ends of the pillows b^2 with the side piece B. The side piece B is preferably of an **I** or double-channel-bar form in cross-section, as indicated at b^5 in Fig. 3 and also in Fig. 7, and the brace member b^4 is preferably of a **T** form in cross-section, as indicated in Fig. 8.

C C are the end pieces of the truck-frame. They are preferably of **T** form in cross-section and are secured by bolts or rivets c to the transverse end flanges b^3 of the truck side piece B at the ends thereof. The truck side

pieces B are also preferably provided with steps or shoulders b^6 to receive the inner flange c' of the truck end pieces C, so that the truck end pieces C may thus rest directly upon the truck side pieces B, as is clearly indicated in Fig. 2. The truck side pieces B and end pieces C are further secured together and strengthened or braced by an angle-plate C' at each corner, secured thereto by bolts or rivets c^2.

The truck-bolster consists of a pair of flat plates D D, set edgewise and at a sufficient distance apart to receive the swinging bolster E between them, and which are secured at their ends by bolts or rivets d to the pillows or vertical columns or flanges b^2 of the truck side piece. The truck-bolster plates D also project over and take a bearing directly upon the truck side pieces B at d', the bolster-plates D being preferably provided with notches d^2 to receive the truck side piece B. The truck-bolster plates D also take a bearing at their lower edges directly upon the truck side pieces B, near the lower end of the pillows b^2 thereof, the pillows b^2 being provided with shoulders b^7 for this purpose, as will be clearly understood by reference to Figs. 2 and 3. The swinging bolster E is adapted to swing endwise and also freely up and down in the space between the upright or edgewise standing truck-bolster plates D D. The swinging bolster preferably consists of a pair of channel-bars e e, secured together by flat plates e', riveted to the flanges of the channel-bars.

The swinging bolster E is supported upon elliptical springs F, which rest upon the hanger-bar F', and which is supported by the hangers F^2 from the hanger-pins F^3, which rest directly upon the truck-bolster plates D D. The hanger-pins F^3 are preferably squared or flattened where they rest upon the truck-bolster plates D, and the bolster-plates D are provided, preferably, with notches or seats d^3. The hanger-pins F^3 are of course round at the points where the hangers bear thereon.

The truck-bolster plates D D are secured together and braced or strengthened near their middle by castings or filler-blocks D', which are secured or bolted thereto, as illustrated in Fig. 3.

D^3 is the center plate, and D^4 the pin connecting the center plate to the swinging bolster.

D^5 D^5 are side bearings or rests, which are preferably secured to the swinging bolster for the car-body bolster to strike against and limit the swaying movement of the car-body.

G is the axle-box. It is provided with lateral integral extensions g and a pair of spring-seats g' g', adapted to receive and embrace the lower ends of the coil-springs H, just as the corresponding spring-seats b' on the truck side pieces receive and embrace the upper ends of these coil-springs. The coil-springs H H thus fit between and are compressed between the integral spring-seats formed on the axle-boxes G and the corresponding integral spring-seats formed on the truck side pieces. No bolts or other fastenings are thus required for securing any of the spring-seats in place, and the springs themselves are held in position by the flanges or walls g^2 b^8, surrounding or forming part of the spring-seats. The axle-box G is provided with openings g^3, one on each side of the axle, to receive the pedestal-columns b b on the truck-frame side pieces B. The pedestal columns or jaws b b thus pass through the journal-boxes G. The pedestal-jaws b b are tied together at their lower ends by a flanged or shouldered bottom plate b^{11}, secured thereto by bolts b^9, furnished with keys b^{10}.

The spring-seats b b' on the truck-frame side pieces, it will be seen, are formed thereon by simply increasing the depth vertically of the lower flanges of the channel-bars forming said truck side pieces and swelling and rounding out said flanges into circular form, so to speak, so that the effect thereof is not to weaken, but, on the contrary, to strengthen and reinforce, the truck side pieces at those bearing-points.

I claim—

1. A car-truck comprising in combination the following parts: first, truck side pieces having pedestal-jaws, spring-seats, pillows for truck-bolster plates and end flanges all formed integral therewith; second, end pieces secured to the end flanges of said side pieces; third, a pair of truck-bolster plates set edgewise and secured to the pillows of the truck side pieces and having a bearing at their ends on top of said truck side pieces; fourth, a swinging bolster fitting between said truck-bolster plates; fifth, hangers supported on said truck-bolster plates; sixth, a hanger-bar, and springs interposed between said hanger-bar and said swinging bolster; seventh, axle-boxes having lateral extensions provided with integral coil-spring seats corresponding to said spring-seats in said truck side pieces; and eighth, coil-springs fitting in and compressed between said spring-seats on said axle-boxes and truck side pieces, substantially as specified.

2. In a car-truck, the combination with truck side pieces having integral spring-seats adapted to surround and embrace the upper ends of coil-springs on either side of the axle, of axle-boxes having lateral extensions provided with integral spring-seats adapted to surround and embrace the lower ends of said coil-springs, and coil-springs fitting in and compressed between said integral spring-seats on the axle-box and truck side piece, whereby by reason of the integral spring-seats on the truck side pieces, the full strength of said side pieces is preserved at their bearing-points over the springs, and the top edges of the side pieces are brought lower and the

truck made more compact without cutting, notching or weakening the side pieces substantially as specified.

3. In a car-truck, the combination with truck side pieces having integral pedestal-jaws, and integral coil-spring seats formed thereon, of an axle-box having lateral extensions and integral coil-spring seats, and provided with openings in said lateral extensions for said pedestal-jaws to pass through, and coil-springs fitting in said seats, whereby by reason of the integral spring-seats on the truck side pieces, the full strength of said side pieces is preserved at their bearing-points over the springs, and the top edges of the side pieces are brought lower and the truck made more compact without cutting, notching or weakening the side pieces substantially as specified.

4. In a car-truck, the combination with truck side pieces having integral pillows or vertical columns or flanges formed thereon for receiving a pair of truck-bolster plates, of a pair of truck-bolster plates set edgewise and secured at each end to said pillows of the truck side pieces and having a bearing at their ends on top of said truck side pieces, substantially as specified.

5. In a car-truck, the combination with truck side pieces having integral pillows or vertical columns or flanges formed thereon for receiving a pair of truck-bolster plates, of a pair of truck-bolster plates set edgewise and secured at each end to said pillows of the truck side pieces and having a bearing at their ends on top of said truck side pieces, said truck-bolster plates having also a bearing at each end near their lower edges on said pillows of said truck side pieces, substantially as specified.

6. In a car-truck, the combination with truck side pieces having integral pillows or vertical columns or flanges formed thereon for receiving a pair of truck-bolster plates, of a truck-bolster comprising a pair of flat plates set edgewise and secured at their ends to the truck side pieces, and a swinging bolster fitting between and bearing against the flat faces of said edgewise-set truck-bolster plates and free to move up and down and endwise between said truck-bolster plates, substantially as specified.

7. In a car-truck, the combination with truck side pieces having integral pillows or vertical columns or flanges formed thereon for receiving a pair of truck-bolster plates, of a truck-bolster comprising a pair of flat plates set edgewise and secured at their ends to the truck side pieces, and a swinging bolster fitting between and bearing against the flat faces of said edgewise-set truck-bolster plates and free to move up and down and endwise between said truck-bolster plates, hanger-pins resting on said truck-bolster plates, hangers suspended from said hanger-pins, a hanger-bar supported by said hangers, and elliptic springs interposed between said hanger-bar and said swinging bolster, substantially as specified.

8. In a car-truck, the combination with truck side pieces provided with integral end flanges, of a pair of truck end pieces secured to said flanges on the truck side pieces, said truck end pieces, each having a flange or lateral web resting on top of said truck side pieces, substantially as specified.

9. In a car-truck, the combination with truck side pieces provided with integral end flanges, of a pair of truck end pieces secured to said flanges on the truck side pieces, said truck end pieces each having a flange or lateral web resting on top of said truck side pieces, and corner-plates secured to said truck side pieces and truck end pieces at the corners of the truck-frame, substantially as specified.

10. In a car-truck, a truck-frame side piece having integral pedestal-jaws, coil-spring seats, on each side of said pedestal-jaws truck-bolster-plate pillows, and end flanges all cast integrally thereon, in combination with axle-boxes having integral spring-seats and coiled springs between said seats on said axle-boxes and said seats on said truck-frame side piece substantially as specified.

11. In a car-truck, the combination with truck side pieces having cast integrally thereon end flanges and truck-bolster pillows, of truck end pieces secured at the ends of said side pieces, and a pair of truck-bolster plates set edgewise and secured to said integral pillows on said truck side pieces, and a swing bolster between said edgewise-set truck-bolster plates substantially as specified.

12. In a car-truck, the combination with truck side pieces having cast integrally thereon end flanges and truck-bolster pillows, of truck end pieces secured at the ends of said side pieces, and a pair of truck-bolster plates set edgewise and secured to said integral pillows on said truck side pieces, said truck-bolster plates having notched ends fitting over said truck side pieces and bearing thereon, substantially as specified.

13. In a car-truck, truck-frame side pieces made of cast-steel or other metal of channel-bar form, the lower flanges of the channel being increased in depth and swelled out on each side of the axle-box pedestals to form circular seats to receive and embrace the upper ends of coil-springs, substantially as specified.

14. In a car-truck, a truck-frame side piece made of cast metal and having integral pedestals, spring-seats on each side of said pedestals, truck-bolster pillows and brace members extending to the lower ends of said pillows, substantially as specified.

FRANK HEDLEY.

Witnesses:
H. M. MUNDAY,
LEW. E. CURTIS.