610481

P/00/002
Sub-regulation 9(2)

COMMONWEALTH OF AUSTRALIA

Patents Act 1952

APPLICATION FOR A PETTY PATENT

*These sections are to be completed only where applicable.

I, WILLIAM BERNARD MILLER

of 38 EIGHTH AVE WILSTON 4051

hereby apply for the grant of a petty patent for an invention entitled A WHEELCHAIR PATIENTS WEIGHING PLATFORM

which is described in the accompanying petty patent specification.

*(To be included in the case of a Convention application)

Details of basic application(s) -

Number of basic application .....

Name of Convention country in which basic application was filed .....

Date of basic application .....

ADDRESS FOR SERVICE ALTERED

*(To be included in the case of an application made by virtue of section 51)

AUSTRALIAN PATENT OFFICE Reg 88(2)

Number of original application .....

Person by whom made .....

My address for service is PIZZEY & COMPANY, BRISBANE 38 EIGHTH AVE WILSTON 4051

.....

Dated this 1st day of February 19 90

B004341 05/02/90

W B Miller
(Signature)

To: THE COMMISSIONER OF PATENTS

This form must be accompanied by a petty patent specification (Form 10A and true copy).

P/00/007
Form 7
Regulation 12(1)

COMMONWEALTH OF AUSTRALIA

Patents Act 1952

DECLARATION IN SUPPORT OF AN APPLICATION FOR A PATENT

(* Delete if inapplicable)

In support of the Application made by ...WILLIAM BERNARD MILLER.....

.....

for a patent for an invention entitled ..A WHEELCHAIR PATIENTS
WEIGHING PLATFORM.....

I, ...WILLIAM BERNARD MILLER.....

of ...38 EIGHTH AVE WILSTON 4051.....

do solemnly and sincerely declare as follows:-

*1. I am the applicant for the patent.

(or, in the case of an application by a body corporate)

~~*1. I am authorised by ...~~.....
the applicant for the patent to make this declaration on its behalf.

*2. I am the actual inventor of the invention.

(or, where a person other than the inventor is the applicant)

*2. ~~.....~~.....

of .....

.....is the actual inventor of the invention and

the facts upon which * I am/* the .....is entitled to make the

application are as follows:- .....

.....

.....

.....

Declared at ...Brisbane.....this ...1ST.....day of ...February.....19...90...

W.B. Miller.....
(Signature)

To: THE COMMISSIONER OF PATENTS

(12) PATENT ABRIDGMENT (11) Document No. AU-B-49179/90
(19) AUSTRALIAN PATENT OFFICE (10) Acceptance No. 610481

(Australian Petty Patent)

(54) Title
WHEELCHAIR WEIGHING APPARATUS

International Patent Classification(s)
(51)[4] G01G 019/02 G01G 019/44 G01G 021/22

(21) Application No. : 49179/90 (22) Application Date : 05.02.90

(43) Publication Date : 16.05.91

(45) Publication Date of Granted Application : 16.05.91

(71) Applicant(s)
WILLIAM BERNARD MILLER

(72) Inventor(s)
WILLIAM BERNARD MILLER

(74) Attorney or Agent
PIZZEY & COMPANY, GPO Box 1374, BRISBANE QLD 4001

(56) Prior Art Documents
US 3732938

(57) Claim

1. Wheelchair weighing apparatus including:-

a pair of longitudinally disposed supporting members, said supporting members adapted to engage the weighing platform of a set of scales;

a pair of transversely disposed connecting members interconnecting said supporting members, and

a pair of wheelchair supporting platform members disposed on said connecting members, each comprising a substantially horizontal wheelchair supporting surface, and longitudinally disposed inner and outer wheel guide portions, wherein said connecting members extend below the level of said weighing platform such that in use said connecting members comprise a safety stop preventing the apparatus from sliding longitudinally from said platform.

614481

COMMONWEALTH OF AUSTRALIA
Patents Act 1952

WILLIAM BERNARD MILLER

PETTY PATENT SPECIFICATION FOR THE INVENTION ENTITLED:-

"WHEELCHAIR WEIGHING APPARATUS"

The following statement is a full description of this invention, including the best method of performing the invention known to me:-

AUSTRALIAN PATENT OFFICE LS

This invention relates to wheelchair weighing apparatus.

This invention has particular but not exclusive application to wheelchair weighing apparatus for use in conjunction with domestic scales, and for illustrative purposes reference will be made to such application. However, it is to be understood that this invention could be used in other applications, such as in conjunction with any other platform type scale arrangement.

Weighing apparatus for use in conjunction with standard scales such that a wheelchair bound person may be weighed are known. For example, US Patent specification No. 3732938 discloses such apparatus. However, the apparatus disclosed in this specification requires adjustment to render it suitable for use in conjunction with a variety of scales. The apparatus must also be adjustable such that the side rails of the apparatus abut the sides of the scale. In general, this requirement for adjustability adds unnecessarily to the cost of manufacture of the article and also provides for complexity in use.

The present invention aims to alleviate the above disadvantages and to provide wheelchair weighing apparatus which will be reliable and efficient in use. Other objects and advantages of this invention will hereinafter become apparent.

With the foregoing and other objects in view, this invention in one aspect resides broadly in wheelchair weighing apparatus including:-

AUSTRALIAN PATENT OFFICE LS

a pair of longitudinally disposed supporting members, said supporting members adapted to engage the weighing platform of a set of scales;

a pair of transversely disposed connecting members interconnecting said supporting members, and

a pair of wheelchair supporting platform members disposed on said connecting members, each comprising a substantially horizontal supporting surface, and longitudinally disposed inner and outer wheel guide portions, wherein said connecting members extend below the level of said weighing platform such that in use said connecting members comprise a safety stop preventing the apparatus from sliding longitudinally from said platform.

Preferably, the apparatus is fabricated from mild steel tube and plate, although it is envisaged that any other suitable engineering material may be used, such as light alloy.

The longitudinally disposed supporting members are preferably parallel and disposed in spaced relationship to one another, the space being selected such that the apparatus may be used with a wide variety of domestic scales. The supporting members preferably extend longitudinally beyond each end of the scale platform such that the full length of the platform is utilized for stable support. The supporting members may be of any width provided that the supporting members are of sufficient strength to support a wheelchair and occupant without significant bending or distortion, and

AUSTRALIAN PATENT OFFICE LS

may even extend in part beyond the side edges of the platform.

The connecting members may take any form consistent with the function of interconnecting both the supporting members and the wheelchair supporting platform members whilst providing stops preventing longitudinal displacement of the apparatus off the supporting platform. Preferably, the connecting members comprise substantially parallel members spaced apart by an amount exceeding the longitudinal dimension of the range of scales considered for use, and are preferably affixed to the underside of the supporting member such that substantially all

AUSTRALIAN PATENT OFFICE

of the height of the connecting members contributes to the stopping action. This confers a specfic advantage in that tipping of the apparatus to permit the mounting of a wheelchair on the apparatus will not tend to dangerously displace the scale unit from beneath the apparatus. Where the apparatus is of the preferred mild steel construction, it is preferred that the connecting members be assembled to the supporting members by welding to eliminate expensive fixings and additional fabrication steps such as drilling.

The wheelchair supporting platform members may take any form consistent with the function of supporting a wheelchair upon the apparatus. Preferably, the wheelchair supporting platforms are a pair of substantially parallel members of sufficient width and spacing to permit the support of a wide range of wheelchairs having differing tracks. The wheelchair supporting members should also be of sufficient width to permit manoeuvering of the chairs onto and off of apparatus by permitting at least limited castoring of the wheelchair front wheels. Preferably, the wheelchair supporting platforms are provided with outer edge rails to prevent accidental steering of the chair off the side of the apparatus and may also be provided with inner edge rails. The wheelchair supporting platform members are preferably of sufficient length to permit mounting of a wheelchair to the apparatus by downwards displacement of an end of the apparatus by the weight of the chair and occupant without displacing the scale or causing the apparatus to be displaced laterally thereto. If desired, the wheelchair supporting platform members may extend beyond both ends of the scale such that the chair may mount and descend

AUSTRALIAN PATENT OFFICE LS

from the apparatus from both ends equally.

In order that this invention may be more easily understood and put into practical effect, reference will now be made to the accompanying drawings which illustrate a preferred embodiment of the invention, wherein:-

FIG. 1 is a perspective view of apparatus in accordance with the present invention, and

FIG. 2 is a plan view of the apparatus of FIG. 1.

In the Figures, there is illustrated wheelchair weighing apparatus 10 including a pair of mild steel strip supporting rails 11 adapted to bear against the weighing platform 12 of a set of scales 13. Welded across the ends of the supporting rails 11 are a pair of connecting rails 14 of box section tubing, the connecting rails 14 being welded to the underside of the supporting rails 11 such that the connecting rails 14 extend downwards below the plane of the weighing platform 12. The inner surfaces 15 of the connecting rails 14 extend sufficiently deeply below the weighing platform 12 to prevent displacement of the apparatus 10 from the weighing platform 12 beyond a position at which the loaded apparatus 10 will fall from the set of scales 13. The connecting rails 14 extend beyond the supporting rails 11 and in turn are welded to wheelchair supporting platforms 16 disposed transverse to the connecting rails 14. The wheelchair supporting platforms are provided with inner 17 and outer 20 guide rails to prevent accidental displacement of a wheelchair sideways and off the apparatus 10. The wheelchair supporting platform has a flat supporting surface 21 which is extended at both ends to provide a mounting lip 22 at each end such that a wheelchair may mount

AUSTRALIAN PATENT OFFICE

the apparatus.

It will of course be realised that while the above has been given by way of illustrative example of this invention, all such and other modifications and variations thereto as would be apparent to persons skilled in the art are deemed to fall within the broad scope and ambit of this invention as defined in the appended Claim.

AUSTRALIAN PATENT OFFICE LS

THE CLAIM DEFINING THE INVENTION IS AS FOLLOWS:-

1. Wheelchair weighing apparatus including:-

a pair of longitudinally disposed supporting members, said supporting members adapted to engage the weighing platform of a set of scales;

a pair of transversely disposed connecting members interconnecting said supporting members, and

a pair of wheelchair supporting platform members disposed on said connecting members, each comprising a substantially horizontal wheelchair supporting surface, and longitudinally disposed inner and outer wheel guide portions, wherein said connecting members extend below the level of said weighing platform such that in use said connecting members comprise a safety stop preventing the apparatus from sliding longitudinally from said platform.

DATED THIS Twelfth DAY OF February, 1991.

WILLIAM BERNARD MILLER

BY

PIZZEY & COMPANY

AUSTRALIAN PATENT OFFICE

49179/90

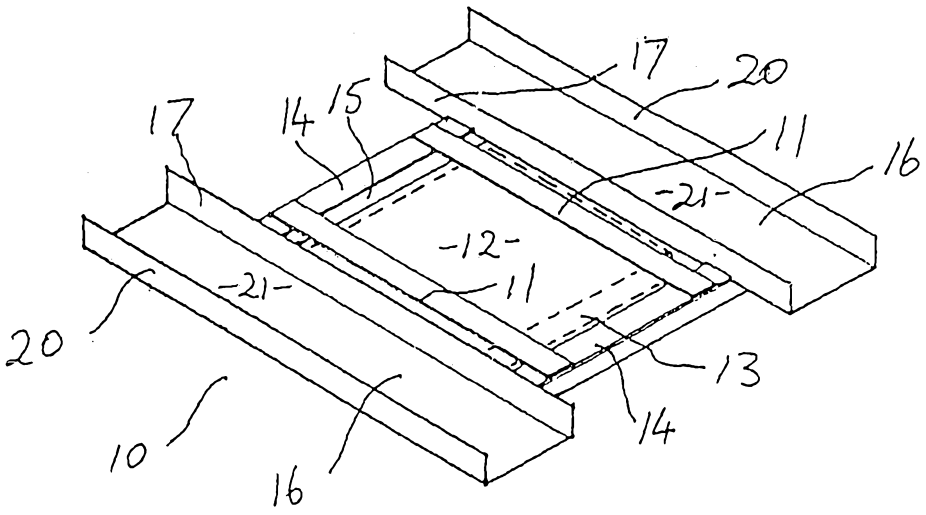

Fig. 1

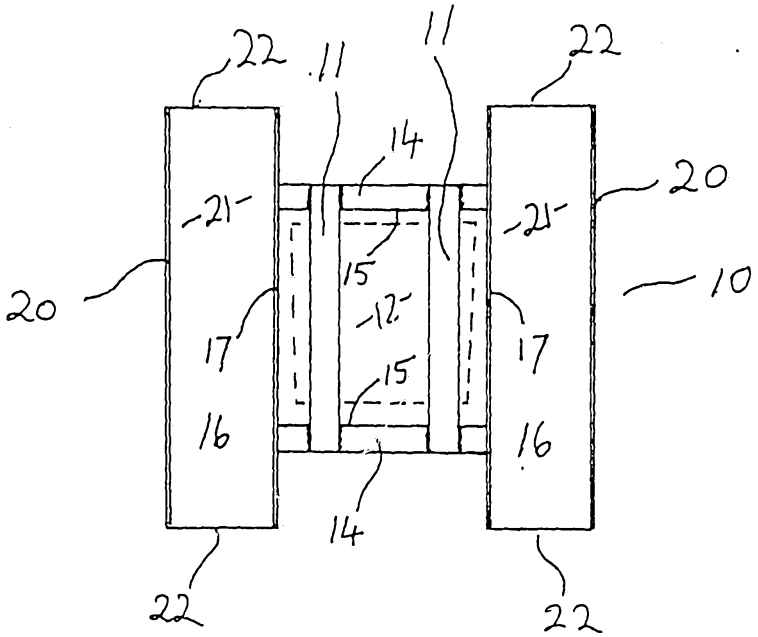

Fig. 2