May 27, 1930. G. BENTLEY 1,759,881

FLOOR SCRUBBING AND DRYING DEVICE

Filed April 26, 1926

Fig. 4.

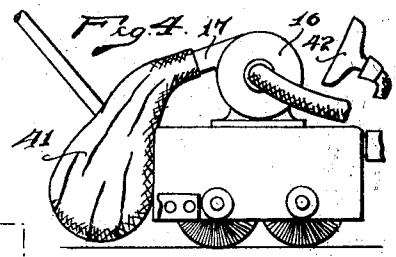

Fig. 1.

Fig. 2.

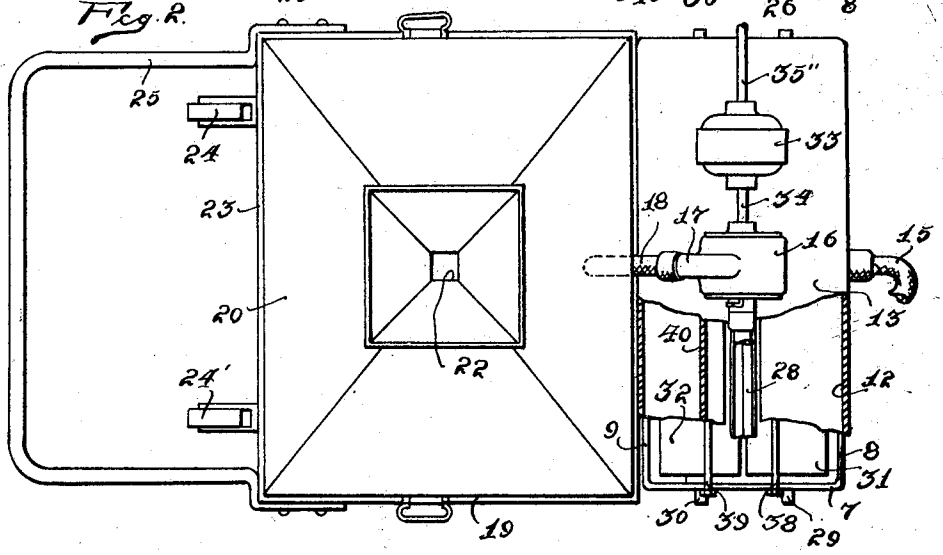

Fig. 3.

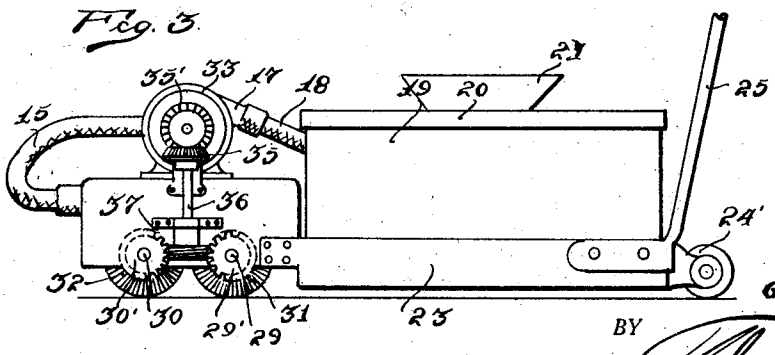

INVENTOR.
Garfield Bentley
BY
Thos. J. Darnell
ATTORNEY.

Patented May 27, 1930 1,759,881

UNITED STATES PATENT OFFICE

GARFIELD BENTLEY, OF HIGHLAND PARK, MICHIGAN

FLOOR SCRUBBING AND DRYING DEVICE

Application filed April 26, 1926. Serial No. 104,564.

My invention relates to a new and useful improvement in a washing, cleaning and drying machine adapted for use in washing and scrubbing floors and drying the same by means of a vacuum. The machine may also be used for vacuum cleaning purposes.

It is an object of the present invention to provide a mechanism which will combine in itself drying, washing and cleaning mechanism so that a floor or other surface may be washed, scrubbed and otherwise cleaned and dried with the mechanism.

It is another object of the present invention to provide a mechanism of this class which will be simple in structure, economical of manufacture and highly efficient in use.

Another object of the present invention is the provision in a mechanism of this class of rotatable members which may be used for scrubbing or drying purposes as desired.

Another object of the invention is the provision in a mechanism of this class of vacuum means for removing the moisture from the floor or surface operated upon and depositing it in a suitable tank or receptacle.

Other objects will appear hereinafter.

The invention consists in the combination and arrangement of parts hereinafter described and claimed.

The invention will be best understood from a reference to the accompanying drawings which form a part of this specification and in which,

Fig. 1 is a central vertical sectional view of the invention.

Fig. 2 is a top plan view of the invention with parts broken away and parts shown in section.

Fig. 3 is a side elevational view of the invention.

Fig. 4 is a fragmentary view of a modified form of the invention.

As shown in the drawings the invention comprises a rectangular frame having cross members 7 and 10 connecting side rails 8 and 9. An inverted box shaped structure 11 is mounted on the rectangular frame and has a double bottom to provide a compartment 12, the bottom 13 serving as a foundation as a supporting platform. Projecting outwardly from the compartment 12 is a nipple 14, connected to which is a tubing 15 leading to a rotary fan 16 having an outlet 17 to which is attached a tube or hose 18, the fan 16 being mounted upon the bottom 13 as a supporting platform. As shown in Fig. 1 the tube or hose 18 is projected through an opening formed in the side of the tank or receptacle 19 having a removable cover 20 which is inclined inwardly toward its center and in which is formed an opening 22 and projecting upwardly from which is a funnel or flaring cup 21. The tank 19 is supported in a suitable frame 23 having at one end the casters 24 and 24′ which so support the tank as to retain it but slightly elevated from the floor or other supporting surface on which the device may be positioned. Connected to the supporting frame 23 and projecting diagonally upwardly therefrom is a handle 25. The auxiliary or secondary bottom of the housing 11 is provided with an elongated slot and the edges 26 and 27 of this slot are angularly turned to provide a nozzle. Mounted between the angularly turned portions 26 and 27 is a V-shaped deflector for deflecting the air entering the nozzle to either side of this deflector. Journalled in the cross rails 7 and 10 are shafts 29 and 30 upon which are fixedly mounted brush rollers 31 and 32 respectively. These rollers may be brushes, or of such other construction as is desired. It is evident that if the rollers are brushes the rollers when rotating over a floor or other surface will serve a sweeping or scrubbing purpose.

Mounted on the bottom 13 as a supporting platform is an electric motor 33 which may be suitably connected to a source of electrical energy. This motor 33 is connected at 34 to the fan 16 so that an operation of the motor 33 will effect an operation of the fan 16. A shaft 35″ projects outwardly from the motor 33 and carries a gear wheel 35′ which meshes with the bevel gear 35 fixedly mounted upon the vertically extending shaft 36, this shaft being suitably journalled on the box like structure 11. Carried at the lower end of the shaft 36 and rotatable therewith is a gear 37,

meshing with a gear 29′ fixed upon the shaft 39 and with a worm gear 30′ fixedly mounted upon the shaft 30.

The structure is such that upon an operation of the motor 33 the gear 37 will be rotated to effect a rotation of the rollers 31 and 32 in opposite directions, these rollers being rotated inwardly toward each other. Mounted in the cross members 7 and 8 and extending between the rollers 31 and 32 are scrapers 38 and 39 which engage the rollers 31 and 32 and serve to scrape the moisture therefrom as these rollers rotate.

In operation when the mechanism is pushed or drawn over a floor to be scrubbed or washed the cleansing material, such as water and soap, will be first deposited upon the floor 11. When the motor 13 is set in operation the rollers 31 will serve to direct the water upwardly from the floor, the scraping members 38 and 39 scraping the water from the roller as it approaches the nozzle formed by the parts 26 and 27. The fans 16 will be in operation so that the water as it is scraped from the rollers will be drawn into the chamber 12 through the pipe 15, the fan 16 and deposited in the tank 19. The deflector 28 serves to divide the water and vapor entering the compartment 12 into two streams, one passing at each side of the deflector. This deflector also serves to reduce the area of the nozzle through which the water may pass without reducing to any great extent the entry area or open end of the nozzle. The tank 19 is provided with the detachable cover 20 as shown and the cover 20 is concaved downwardly as shown in Fig. 1 to prevent splashing of the water outwardly through the opening 22. The box like structure is provided with the partition 40 which serves to reduce the size of the compartment 12 for more effective vacuum with a small fan 16.

When it is desired to move the mechanism from place to place without operating the rollers 31 and 32 the handle 25 may be used to tilt the mechanism so that it rides on the casters 24 and 24′ alone. It is believed apparent from the description given that the device may also be used for vacuum purposes whether the floor has previously been moistened or not and when used in this manner the fan outlet 17 may be attached to a dust bag 41 permitting the rollers 31 and 32 to function and loosen the dust and dirt. The device may also be used for vacuum cleaning purposes by attaching, instead of the tube 15, a flexible tubing carrying a nozzle 42 to the fan 16, a dusting bag 41 being connected to the outlet nozzle 17.

The device has proved quite efficient for the purposes intended, the vacuum when cooperating with the rollers 31 and 32 serving as an effective means for drying the floor after washing.

While I have illustrated and described the preferred form of structure I do not wish to limit myself to the precise form of structure shown but desire to avail myself of such variations and modifications as may come within the scope of the appended claim.

Having thus described my invention what I claim as new and desire to secure by Letters Patent is:

A mechanism of the class described comprising a frame; a pair of brush rollers rotatably mounted in said frame in axial parallel relation to each other; means for rotating said rollers in opposite directions; a housing positioned above said rollers and having an elongated opening formed in its base extending axially of and between said rollers; a deflecting member, V-shaped in transverse cross section, mounted on said housing and positioned inwardly thereof at said opening to provide at opposite sides thereof a pair of axially extending entry nozzles leading into said housing; and a vacuum producing mechanism for setting up a vacuum in said housing and a receptacle in communication, through said vacuum mechanism, with said housing.

In testimony whereof I have signed the foregoing.

GARFIELD BENTLEY.