No. 835,314. PATENTED NOV. 6, 1906.

E. S. OLIVER.

HORN SUPPORT FOR TALKING MACHINES.

APPLICATION FILED OCT. 15, 1904.

2 SHEETS—SHEET 1.

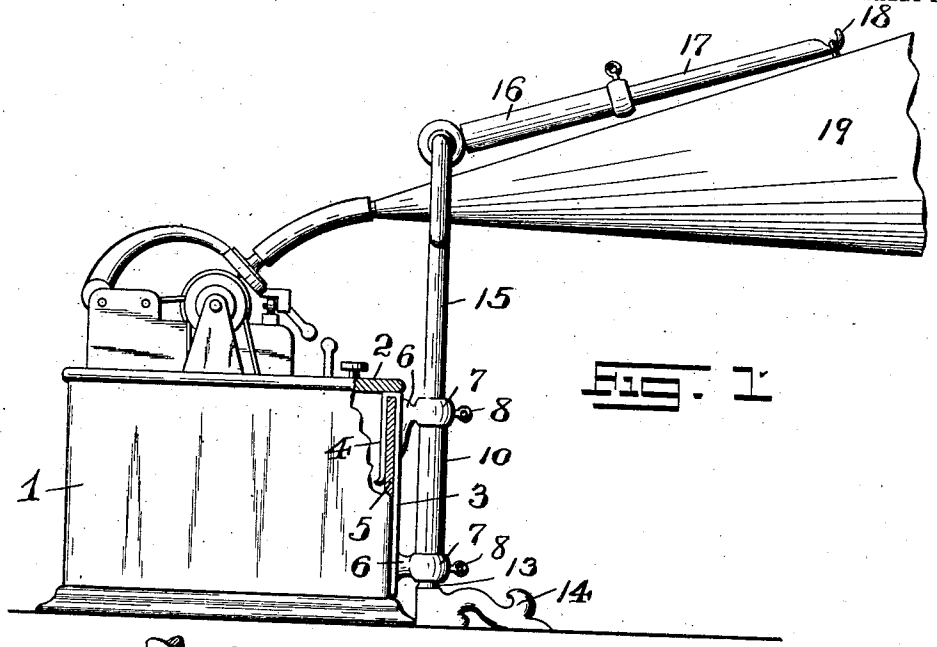

Fig. 1.

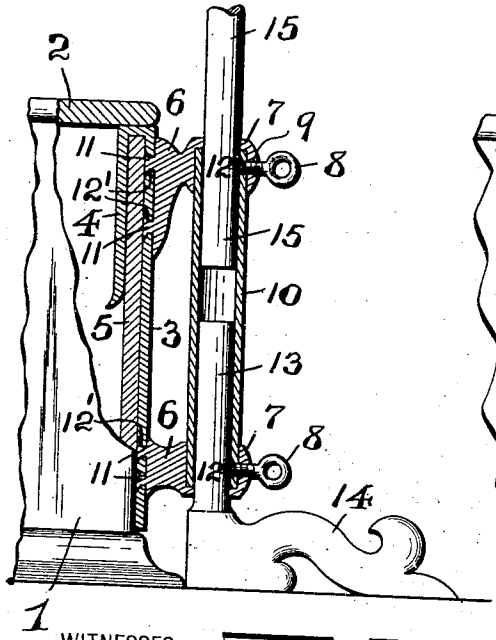

Fig. 2.

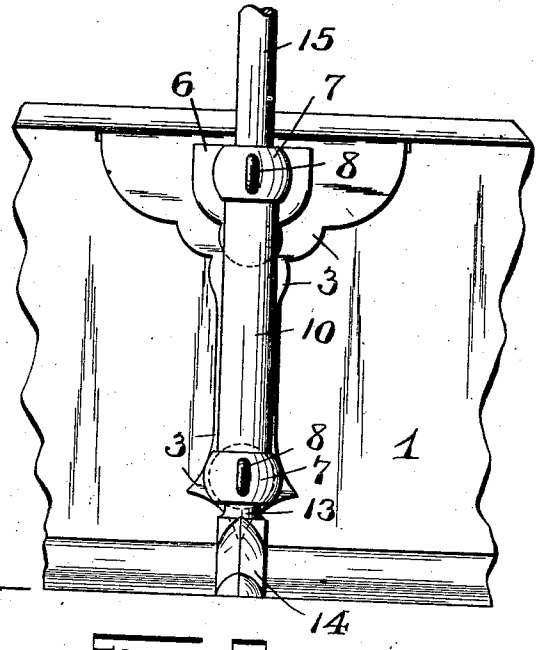

Fig. 3.

WITNESSES:

Geo. D. Richards

W. B. Fraentzel

INVENTOR:

Ellis S. Oliver,

BY

Fred'k C. Fraentzel

ATTORNEY

No. 835,314. PATENTED NOV. 6, 1906.

E. S. OLIVER.

HORN SUPPORT FOR TALKING MACHINES.

APPLICATION FILED OCT. 15, 1904.

2 SHEETS—SHEET 2.

Fig. 4

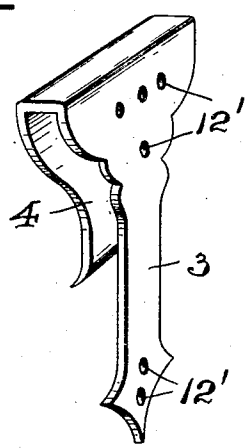

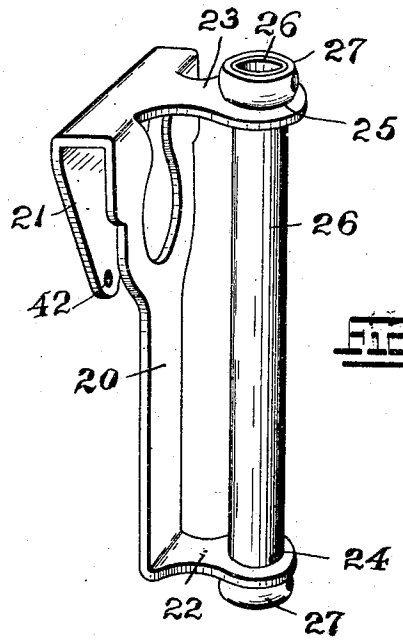

Fig. 5

Fig. 6

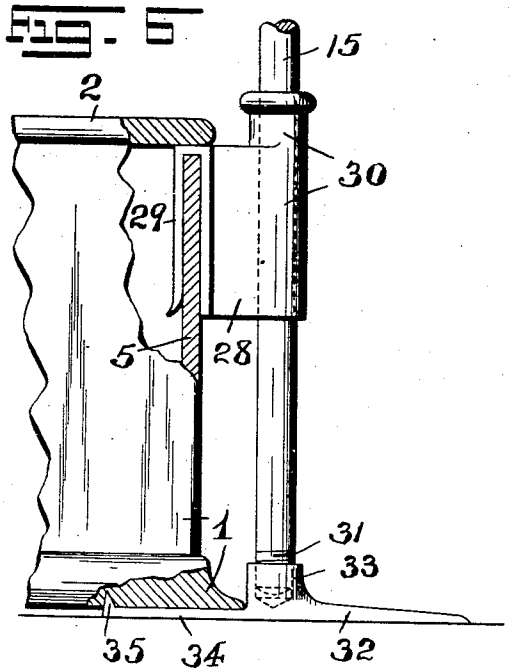

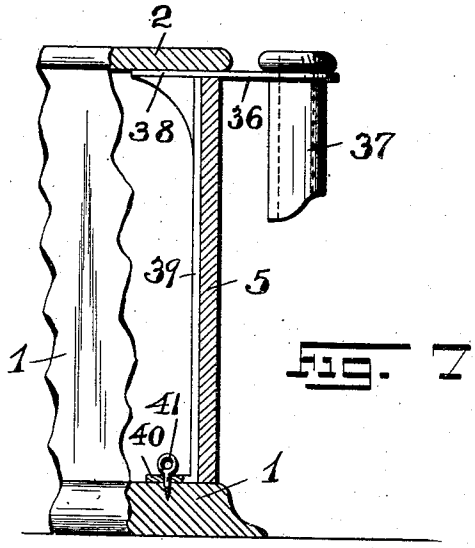

Fig. 7

WITNESSES:

Geo. D. Richards.

H. B. Fraentzel.

INVENTOR:

Ellis S. Oliver,

BY

Fred'k C. Fraentzel.

ATTORNEY

UNITED STATES PATENT OFFICE.

ELLIS S. OLIVER, OF NEWARK, NEW JERSEY, ASSIGNOR TO HAWTHORNE & SHEBLE MANUFACTURING CO., OF PHILADELPHIA, PENNSYLVANIA, A CORPORATION OF PENNSYLVANIA.

HORN-SUPPORT FOR TALKING-MACHINES.

No. 835,314. Specification of Letters Patent. Patented Nov. 6, 1906.

Application filed October 15, 1904. Serial No. 228,497.

To all whom it may concern:

Be it known that I, ELLIS S. OLIVER, a citizen of the United States, residing at Newark, in the county of Essex and State of New Jersey, have invented certain new and useful Improvements in Horn-Supports for Talking-Machines; and I do hereby declare the following to be a full, clear, and exact description of the invention, such as will enable others skilled in the art to which it appertains to make and use the same, reference being had to the accompanying drawings, and to numerals of reference marked thereon, which form a part of this specification.

My present invention has reference to improvements in horn-supports for talking-machines, such as phonographs and the like; and this invention has for its principal object to provide a simple and cheaply-constructed horn-support for talking-machines of the various kinds which can be detachably secured to the box or case of the machine without any employment of fastening-screws or clamping devices which are made to bind or clamp upon certain portions of the box or case and are liable to abrade or mar its surface, the parts of my novel horn-support being readily adjustable, whereby the reproducing-horn can be suitably brought in its supported position in front of the talking-machine to produce the best results.

Another object of this invention is to provide a novel horn-support which can be brought in its relatively operative position upon the box or case of the talking-machine by simply hooking or arranging a suitable portion of the supporting device over an edge of the box or case of the machine and after the horn-supporting members have been properly adjusted can be readily lifted from its supported position upon the box or case and replaced thereon as may be desired without disturbing the adjustment of the horn-supporting members of the attachment.

Other objects of my invention not at this time more especially mentioned will be understood from the following detailed description of the device embodying the principles of this invention.

With the various objects of my present invention in view the said invention consists in the novel horn-support for talking-machines hereinafter set forth; and, furthermore, this invention consists in the arrangements and combinations of devices and parts, as well as in the details of the construction of the same, all of which will be more fully described in the following specification and then finally embodied in the clauses of the claim which are appended to and which form an inseparable part of the said specification.

The invention is clearly illustrated in the accompanying drawings, in which—

Figure 1 is a side view of a talking-machine and its box or case and the horn-support embodying the principles of this invention, the said box or case and its cover being shown partially broken away and said portions being represented in vertical section. Fig. 2 is an enlarged view of a portion of the said box or case and its cover, shown partly in side elevation and partly in vertical section, with the lower supporting members of the horn-support represented in the detachable holding relation with the front of the said box or case, some of said members being illustrated in longitudinal central vertical section. Fig. 3 is a front view of the parts shown in said Fig. 2. Fig. 4 is a perspective view of a holding device or support forming a part of the lower supporting means of the horn-support. Fig. 5 is a similar view of a modified form of holding or supporting device and a post-receiving socket or tube connected therewith. Fig. 6 is a part side elevation and part vertical section of the box or case and its cover with a side view of still another modified form of holding or supporting device and a receiving-socket, a portion of the horn-supporting post or standard arranged in said socket and a modified construction of foot-piece with which the lower end portion of said post or standard is connected; and Fig. 7 is a similar view of the box or case and cover with still another modified arrangement of holding or supporting device and a portion of the post-receiving socket, said holding or supporting device and the portion of the receiving-socket being represented in side view, the lower portion of the socket being shown broken away and the foot-piece being omitted from said view.

Similar characters of reference are employed in all of the above-described views to indicate corresponding parts.

Referring now to the several figures of the drawings, the reference character 1 indicates the usual box or case of a talking-machine, such as a phonograph, with which the horn-support embodying the principles of my present invention is to be brought in separable or detachable holding relation without the use of screws or other fastening means or holding clamps which are brought in gripping or clamping engagement with the edges of the box or case, and thus easily damage or mar the outer and usually highly polished surfaces of the box or case. The reference character 2 indicates the usual cover of the said box or case.

The horn-supporting device or attachment comprises a suitably-constructed and preferably ornamented support or holder 3, provided with a clamping means, such as a suitably-bent hook 4, said hook preferably having a suitable spring-like action and the said parts being of such construction that the main body of the support or holder can be arranged upon the front panel 5 of the box or case without any danger of marring or scratching the same and the said hook 4 projecting over the upper edge of the said box or case and extending down and against the inner face of the front panel of the box or case in slidable and detachable frictional holding engagement with the same, the lid or cover 2 of the box resting with its front edge portion upon the connecting part of the said hook 4 with the main body of said support or holder 3, substantially as illustrated in the accompanying drawings. The said support or holder 3 is provided with a pair of outwardly-extending brackets or holding members 6, formed with suitably-constructed receiving sockets 7 and fastening-screws 8, preferably in the form of set-screws, which are screwed into suitably-disposed screw-holes 9 in said sockets 7 and have their end portions extending into and through suitably-disposed holes or perforations 12 in a tube or receiving socket 10 for the reception of a horn-supporting post or standard, substantially as shown and for the purposes to be presently described. The said brackets 6 may be secured upon the front of the said holder or support 3 in any suitable manner, one means of fastening them in place being by means of lugs or studs 11, integrally connected with said brackets 6, as shown, said lugs or studs 11 being arranged in correspondingly-placed holes or perforations 12' in the body of the said holder or support 3 and riveted over upon the back of said body in the manner represented in Fig. 2 of the drawings. Extending into the lower open-ended portion of the said tube 10 and secured therein against turning by means of the lower fastening or set screw 8 is a post or standard 13, extending in an upward direction from a suitably-constructed and preferably ornamented foot-piece 14. Adjustably secured in the upper portion of said tube 10 and held against turning therein by means of the upper fastening or set screw 8 is the lower end portion of a supporting rod or standard 15. Suitably connected with the upper end portion of said supporting rod or standard 15 is a forwardly-projecting tube 16, with which is adjustably connected a horn suspending or supporting rod, bar, or arm 17, provided with any suitably-constructed supporting or suspension device, preferably a hook 18, from which the horn 19 may be supported or suspended in its proper position in front of the phonograph or other talking-machine in the manner clearly illustrated in Fig. 1 of the drawings. It will be understood, however, that the rod or bar 17 may be provided with any other fastening or holding means for supporting the horn in place, the said rod, bar, or arm 17, the tube 16, and the rod or standard 15 being adjustably connected, preferably, in the manner set forth in my previous application for Letters Patent filed June 25, 1904, Serial No. 214,092. Any other arrangement of connecting the members of the horn-support may, however, be employed, if desired, and the rod or standard 15, the tube 16, and the bar or arm 17 may be of any other construction suitable for the purposes of this invention and other from that shown in said Fig. 1 of the drawings.

From the foregoing description of the horn-support shown in said Figs. 1 to 4, inclusive, it will be observed, that I have produced a serviceable and strong as well as a simply-constructed device which may be quickly arranged in its relatively detachable and supported position upon the box or case of the talking-machine without the use of fastening-screws or other similar fastening devices for permanently securing the horn-support in position and without the use of the clamping devices arranged over the edges of the box or case and which often mar or scratch or otherwise deface the highly-polished surfaces of the box or case.

In Fig. 5 of the drawings I have illustrated a slightly-modified form and construction of holder or support 20, which is formed with a supporting or holding hook 21 to be arranged over the edge of the panel 5 of the box or case in the manner above described, this holder or support, however, having integrally connected with the lower portion of its body a bracket 22. Integrally connected with the upper part of the said body, being struck out thereform substantially as shown in said Fig. 5 of the drawings, is a second bracket 23. Both of the said brackets 22 and 23 are provided with openings 24 and 25, respectively, a tube or socket 26 being arranged in said openings and being held in its operative relation with the said brackets 22 and 23 by means of suitable collars 27 or other holding

devices, which are preferably secured in place by means of set or other fastening screws similar to those employed with the construction represented in Figs. 1, 2, and 3 of the drawings.

If desired, a support or holder 28 (represented in Fig. 6 of the drawings) may be employed, this support or holder being provided with a supporting-hook 29 to be used in the manner above stated and said support or holder being provided with a receiving-socket, as 30, in which the lower end portion of the supporting post or standard 15 is suitably arranged. If desired, the lower end portion of the said post or standard 15 may be extended, as shown, being provided at its extreme lower portion with a screw-thread 31, adapted to be screwed into a correspondingly-arranged screw-socket 33 of a suitable foot-piece or support 32. This foot-piece may also be provided with a rearwardly-extending bar or arm 34, provided with a holding-point 35 of any suitable construction, said bar or arm 34 being arranged beneath the bottom of the box or case 1 and the point 35 being forced into the wood, as clearly illustrated in said Fig. 6, whereby a double securing means is provided which enables the attachment to be used more especially as a horn-support for very large and long horns.

Another form of support or holder is represented in Fig. 7 of the drawings. The support or holder in this case consists of a bracket 36, having a socket or tube receiving opening, in which a suitable socket or tube, as 37, is arranged, the said bracket 36 having its rear portion 38 extending into the box or case 1 and arranged between the edge of the panel 5 and the cover 2, substantially in the manner illustrated. The said rear portion 38 of the bracket 36 is provided with a downwardly-extending plate 39, fitted against the inner face of the panel 5, as shown, and provided at its lower end with a right-angled member or foot 40, fitted upon the inner surface of the base or bottom of the box or case 1 and provided with a perforation for the reception of a screw 41 for securing the parts in their positively-operative relation within the box or case 1.

Referring to Fig. 5 of the drawings, it will be noted that the hook 20 of the support or holder may, if desired, be provided with a perforation 42 for the reception of a screw or other fastening-pin or the like whereby the hook, as an extra precaution, may be more firmly arranged in its holding position upon the inner face of the panel 5 of the box or case 1. Ordinarily, however, the hook is sufficient for suitably securing the horn-support, and the horn supported thereby in its operative and detachable position upon the box or case of the talking-machine, and this is the form of support which I prefer to use under ordinary circumstances; but when the support is to be used with extra large and long reproducing-horns then it may be desirable to provide the hook with a fastening-screw, as above stated, or to use the construction represented in said Figs. 6 and 7 of the drawings.

The simplicity of construction and the utility of the horn-support for separable or detachable application to the various kinds of talking-machines, and especially phonographs, will be clearly evident from the foregoing description of my invention, and need therefore not be further dwelt upon here.

I claim—

1. In a horn-support for sound-reproducing machines, a support or holder, a supporting-hook adapted to engage with the upper edge of a panel of the case of the sound-reproducing machine, forwardly-extending brackets upon said support or holder, a tubular socket in said brackets, and a horn-supporting post in said socket, substantially as and for the purposes set forth.

2. In a horn-support for sound-reproducing machines, a support or holder, a supporting-hook adapted to engage with the upper edge of a panel of the case of the sound-reproducing machine, forwardly-extending brackets upon said support or holder, a tubular socket in said brackets, a horn-supporting post loosely arranged in said socket, and means for vertical adjustment of said post in said socket, substantially as and for the purposes set forth.

3. In a horn-support for sound-reproducing machines, a support or holder, means on said support or holder for carrying a horn-supporting post, a supporting-hook at the upper end of said support or holder adapted to be brought into frictional and separable holding engagement with the upper edge of a panel of the sound-reproducing machine, and a lower foot-piece, connected with means for carrying a horn-supporting post, substantially as and for the purposes set forth.

4. In a horn-support for sound-reproducing machines, a support or holder, a supporting-hook adapted to engage with the upper edge of a panel of the case of the sound-reproducing machine, forwardly-extending brackets upon said support or holder, a tubular socket in said brackets, a horn-supporting post in said socket, a lower foot-piece, and a standard on said foot-piece upon which said socket is arranged, substantially as and for the purposes set forth.

5. In a horn-support for sound-reproducing machines, a support or holder, a supporting-hook adapted to engage with the upper edge of a panel of the case of the sound-reproducing machine, forwardly-extending brackets upon said support or holder, a tubular socket in said brackets, a horn-supporting post loosely arranged in said socket, means for vertical adjustment of said post in said

socket, a lower foot-piece, and a standard on said foot-piece upon which said socket is arranged, substantially as and for the purposes set forth.

6. The combination, with a vertical piece adapted to be loosely arranged against the front panel of a sound-reproducing machine, of a horn-supporting means carried by said vertical piece, a clamping means extending from said vertical piece over the edge and back of the inner face of said panel, a forwardly-extending foot-piece, and a standard on said foot-piece, connected with said horn-supporting means, substantially as and for the purposes set forth.

7. In a horn-support for sound-reproducing machines, a horn-supporting post holder or support adapted to be arranged upon the front of the case of the machine, a supporting or retaining means at the upper portion of said post holder or support extending over the edge and back of the inner face of the front panel of the case, and a forwardly-extending foot-piece at the lower end of said post holder or support to prevent tilting, substantially as and for the purposes set forth.

8. A horn-supporting crane for talking-machines having a vertical post, a bracket projecting from said post below the projecting portion of the crane and in a reverse direction therefrom, said bracket being provided with means for securing it to the motor-box of the machine at a point above the bottom of the same, and a supporting-foot projecting outwardly from the post below said bracket and having a bearing upon the same support as that upon which the motor-box is mounted.

9. A horn-supporting crane for talking-machines having a vertical post, a bracket projecting from said post below the projecting portion of the crane and in a reverse direction therefrom, a means of adjustment between said post and said bracket, means for securing said bracket to the motor-box at a point above the bottom of the same, and a supporting foot-piece projecting outwardly from said post below said bracket and having a bearing upon the same support as that upon which the motor-box is mounted, substantially as and for the purposes set forth.

10. A horn-supporting crane for talking-machines having a vertical post, a bracket projecting from said post below the projecting portion of the crane and in a reverse direction therefrom, a means of adjustment between said post and said bracket, means for securing said bracket to the motor-box at a point above the bottom of the same, a supporting foot-piece projecting outwardly from said post below said bracket and having a bearing upon the same support as that upon which the motor-box is mounted, and a means of adjustment between the post and said foot-piece, substantially as and for the purposes set forth.

In testimony that I claim the invention set forth above I have hereunto set my hand this 10th day of October, 1904.

ELLIS S. OLIVER.

Witnesses:

FREDK. C. FRAENTZEL,

GEO. D. RICHARDS.