A. HELFENSTEIN.

APPARATUS FOR REFINING METALS BY HEATING.

APPLICATION FILED JUNE 5, 1912.

1,220,111. Patented Mar. 20, 1917.

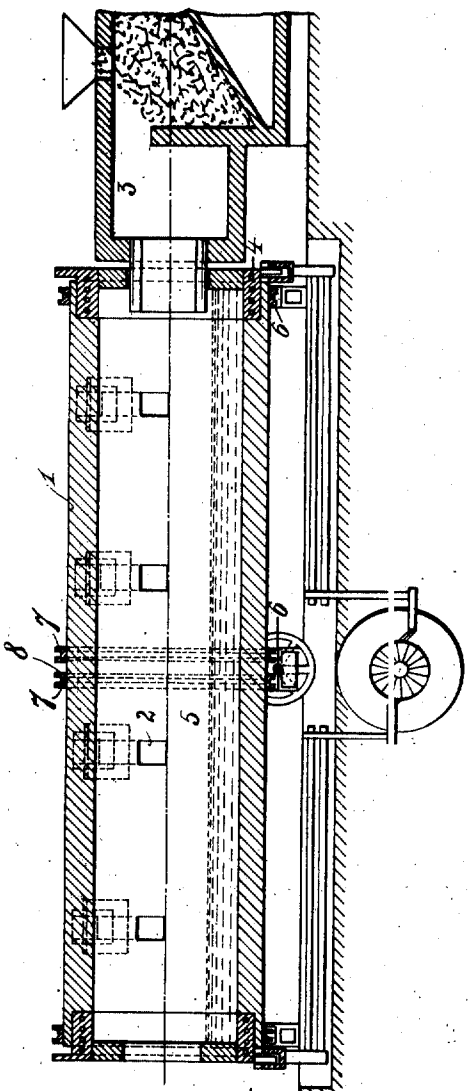

FIG. 2.

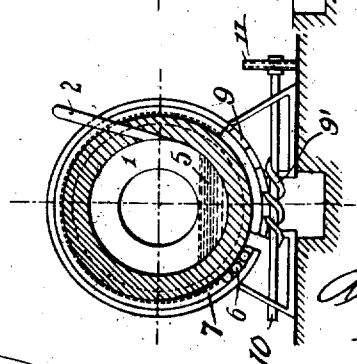

FIG. 1.

Witnesses:
M. E. Roche
C. Everett Lancaster.

Inventor:
Alois Helfenstein
by B. Singer
Atty

UNITED STATES PATENT OFFICE.

ALOIS HELFENSTEIN, OF VIENNA, AUSTRIA-HUNGARY.

APPARATUS FOR REFINING METALS BY HEATING.

1,220,111. Specification of Letters Patent. Patented Mar. 20, 1917.

Application filed June 5, 1912. Serial No. 701,881.

To all whom it may concern:

Be it known that I, ALOIS HELFENSTEIN, citizen of the Republic of Switzerland, and a resident of Vienna, Austria-Hungary, have invented new and useful Improvements in Apparatus for Refining Metals by Heating, of which the following is a specification.

In refining metals heating first by means of fuel and subsequently by electricity through the medium of electric arcs or slag resistance heating is known. According to that process the current conveying electrodes must be inserted each time in the furnace for use and be removed therefrom during the fuel heating period. In consequence of the wearing away of the electrodes, electric and fuel heating cannot be employed at the same time.

Further the introduction to the bath of electric short-circuit heating by second class conductors after the ordinary process is carried out for the purpose of obtaining high class steel in a Bessemer converter or Martin furnace is also known. The electric current in this case is carried transversely through the bath which in consequence of it great depth requires very great current strength for its heating.

The present invention is carried out in the following manner: In a long tubular furnace a metal bath layer which is very thin relatively to the diameter is heated by the direct passage of current in the longitudinal direction of the metal bath as well as by fuel heating over the bath for the purpose of effecting the refining process more quickly and more satisfactorily. The thin extended metal bath presents on the one hand to the fuel heating and to the refining substances a surface which is large relatively to the cross section of the bath so that the refining action is more quickly effected. On the other hand the heating of shallow baths requires less strength of current and the extended form of the bath enables higher potential to be employed, so that the electric heating is more intense, and the process accelerated. Moreover the gas removal period (deoxidation) in connection wherewith cooling must be again effected, can be more quickly carried through.

As compared with the known process referred to it is possible with the present invention, in consequence of the extended form of the furnace and the arrangement of the current producing pole at the ends of the furnace, to effect by powerful cooling action without particular disadvantage, complete freezing on each side of the bath to the extent of 1 meter, whereby it is possible to employ poles consisting of first class conductive material, and to avoid powerful intermediate resistances. Such a measure would make the process practically impossible with the furnace employed for known processes.

In consequence of the ample heating of the metal bath by the electric current it is not necessary that the fuel heating should attain the high temperature over the bath as with ordinary reducing furnaces, which is a considerable advantage as regards the admissibility of fuel and the slighter strain on the apparatus.

Now in order to effect a thorough mixing of the metal and eventually of the additional substances during the process the furnace either effects a rotary or swinging movement around the longitudinal axis or a tilting movement in the direction of the ends.

The two movements may also be employed in combination.

Figures 1 and 2 of the drawing are respectively a vertical longitudinal section and a transverse section of a furnace for carrying out the process.

The suitably tubular formed, Martin furnace 1 is charged through the openings 2 with fluid or cold charge and additional substances and receives the heating gas for carrying out the normal Martin process through the generator 3. In the bottom of the furnace the tube has inserted poles 4 through which the short circuit current from the dynamo engine or from a division of a transformer secondary current circuit can be transmitted at any time to the bath 5.

The poles consist of first class conductors, are water cooled and inserted so that they come into direct contact with the metal bath, and are connected outside the furnace with the source of current, but notwithstanding their arrangement are situated outside the fuel heating zone, and are thus not exposed to the high temperature.

The tubular furnace is suitably seated on rollers 6 and can be swung and rotated around its axis by a suitable driving mechanism. The movement can be effected intermittently, so that the intermissions are always concurrent with the carrying out of

the process. As shown in Fig. 1 and indicated in Fig. 2, the furnace in its center is provided with roller races 7 for the reception of the rollers 6 and separated by a channel 8 within which a worm gear 9 is provided meshing with a worm 9' on a shaft 10 provided with a hand wheel 11 for rotating said shaft and by means of the worm gear also the furnace around its longitudinal axis.

Having now particularly described and ascertained the nature of my said invention, and in what manner the same is to be performed, I declare that what I claim is:—

An apparatus for refining metals by heating comprising in combination, a long tubular furnace provided with charging openings and adapted to receive a thin metal bath, means for heating said bath by fuel, water cooled conductors extending with their ends into said bath within said furnace through the bottom thereof for short circuiting said bath, means for imparting to said furnace an intermittent rotary movement around its longitudinal axis, and means for supplying energy to said conductors, substantially as described.

In testimony whereof I affix my signature in presence of two witnesses.

ALOIS HELFENSTEIN.

Witnesses:

AUGUST FUGGER,

IGNAZ KUOÑ SCHNACHY.