(12) PATENT APPLICATION **(11)** Application No. **AU 200027642 A1**
(19) AUSTRALIAN PATENT OFFICE

(54) Title
Supporting concentrator in multiple paging channel environment

(51)[7] International Patent Classification(s)
H04Q 007/30 **H04Q 007/38**
H04B 007/26

(21) Application No: **200027642** (22) Application Date: **2000.04.10**

(30) Priority Data

(31) Number	(32) Date	(33) Country
09293330	**1999.04.16**	**US**

(43) Publication Date : **2000.10.19**
(43) Publication Journal Date : **2000.10.19**

(71) Applicant(s)
Lucent Technologies Inc

(72) Inventor(s)
Yuen-Yin L. Koo; Semyon B. Mizikovsky; Eshwar Pittampalli

(74) Agent/Attorney
SPRUSON and FERGUSON,GPO Box 3898,SYDNEY NSW 2001

ABSTRACT

SUPPORTING CONCENTRATOR IN MULTIPLE PAGING CHANNEL ENVIRONMENT

A paging signal is detected where the paging signal is intended for a mobile-telephone (34) having a paging channel frequency that is different than a paging channel frequency associated with a concentrator (38). A base station (32) transmits a base station-to-mobile (BS-MT) paging message by including such BS-MT paging message in a base station-to-concentrator (BS-C) (38) paging message. The BS-MT paging message includes a message portion and a mobile-telephone identifier portion, wherein the mobile-telephone identifier portion indicates the mobile-telephone (34) to which the BS-MT paging message is for indicating the concentrator (38) to which the BS-C is intended. The BS-C paging message is transmitted over a paging channel on a frequency f_1 associated with the intended concentrator (38) (i.e., concentrator through which the mobile-telephone is linked to the base station). The intended concentrator (38) detects the BS-C paging message by monitoring its associated paging channel on frequency f_1 for a BS-C paging message with a concentrator identifier portion indicating the concentrator (38). Upon detecting its BS-C paging message, the concentrator (38) parses the BS-MT paging message from the BS-C message and transmits the BS-MT paging message to the intended mobile-telephone (34) using a paging channel on frequency f_2 being monitored by the mobile-telephone (34).

FIG. 2A

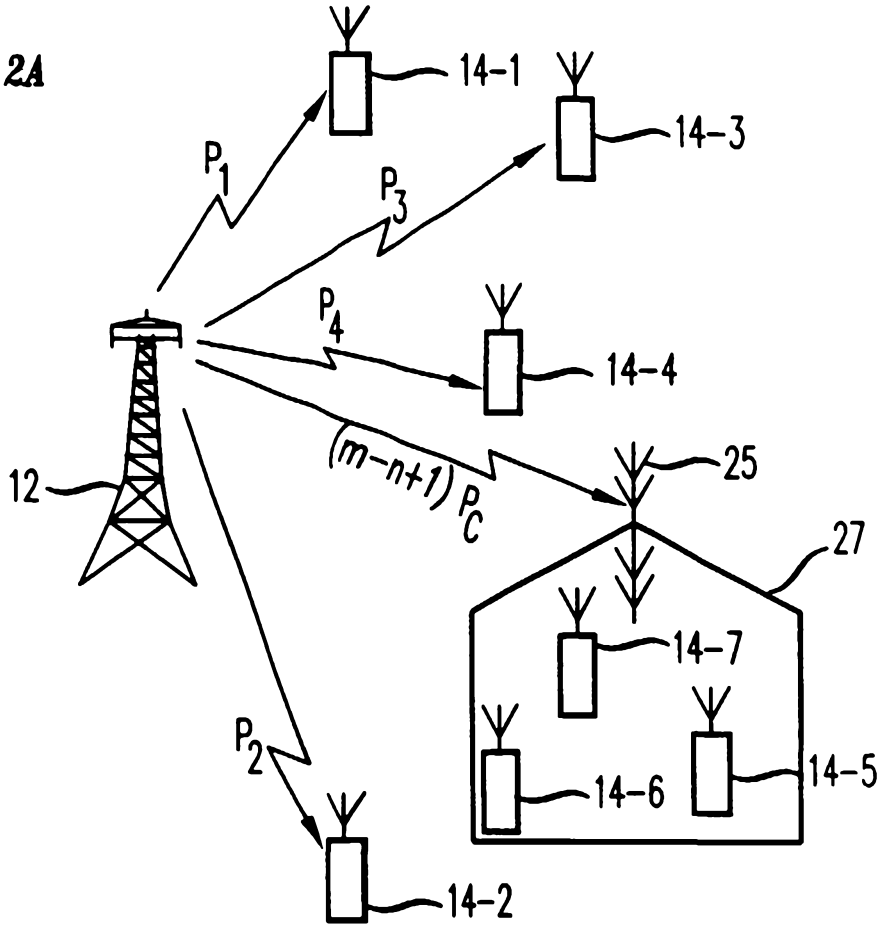
10
14-1
14-3
P1
P3
P4
14-4
12
(m-n+1) Pc
25
27
14-7
14-6
14-5
P2
14-2

FIG. 3

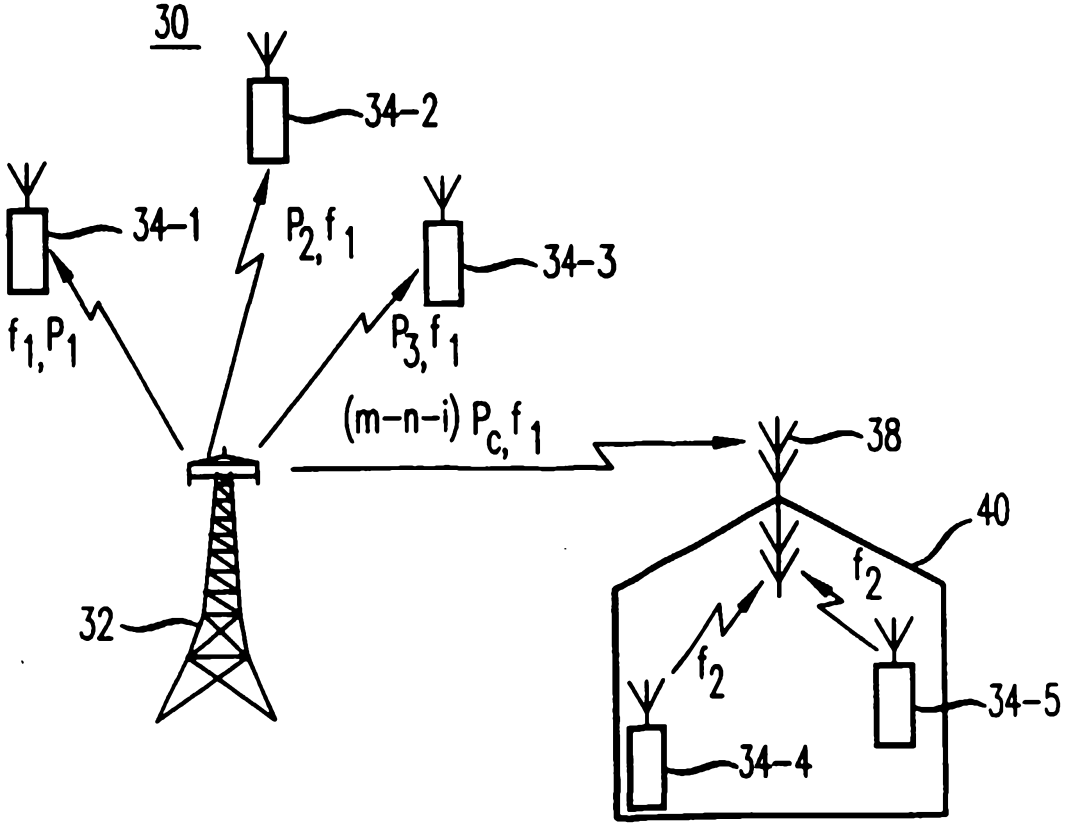
30
34-2
34-1
P2, f1
34-3
f1, P1
P3, f1
(m-n-i) Pc, f1
38
40
32
f2
f2
34-5
34-4

S&F Ref: 500092

AUSTRALIA

PATENTS ACT 1990

COMPLETE SPECIFICATION

FOR A STANDARD PATENT

ORIGINAL

Name and Address of Applicant :	Lucent Technologies Inc 600 Mountain Avenue Murray Hill New Jersey 07974-0636 United States of America
Actual Inventor(s):	Yuen-Yin L. Koo, Semyon B. Mizikovsky, Eshwar Pittampalli
Address for Service:	Spruson & Ferguson St Martins Tower 31 Market Street Sydney NSW 2000
Invention Title:	Supporting Concentrator in Multiple Paging Channel Environment

The following statement is a full description of this invention, including the best method of performing it known to me/us:-

IP Australia
Documents received on:
10 APR 2000
Sydney
Batch No:

SUPPORTING CONCENTRATOR IN MULTIPLE PAGING CHANNEL ENVIRONMENT

FIELD OF THE INVENTION

The present invention relates generally to wireless communications systems and, in particular, to paging a mobile-telephone in a wireless communications system.

BACKGROUND OF THE RELATED ART

The capacity of wireless communications systems is limited by a variety of factors including total transmission power at base stations. FIG. 1 depicts a wireless communication system 10 comprising at least one base station (BS) 12 in communication with a plurality of mobile-telephones (MT) 14-*j*, where *j*=1,...,n. BS 12 transmits signals 16-*j* to MT 14-*j* over one or more downlink channels. Each signal 16-*j* has an associated power level P_j at which it is transmitted, wherein the value of power level P_j depends on a variety of factors including distance and interference caused by buildings. The transmission power P_{BS} of BS 12 is equal to the sum of P_j, i.e., $P_{BS} = \sum_{j=1}^{j=n} P_j$. However, P_{BS} cannot exceed a maximum transmission power level P_{max} associated with BS 12, i.e., $P_{BS} \leq P_{max}$. Thus, the number of mobile-telephones 14-*j* BS 12 can be in communication simultaneously (i.e., capacity) is limited by P_{max}.

Suppose some mobile-telephones in communication with BS 12 are in building 27, see FIG. 2. BS 12 transmits signals 20-*k* to MT 14-*k*, wherein each signal 20-*k* has an associated power level P_k at which it is transmitted, where *k*=n+1,...,m. In this situation, the transmission power P_{BS} of BS 12 is equal to the sum of P_j and P_k, i.e., $P_{BS} = \sum_{j=1}^{j=n} P_j + \sum_{k=n+1}^{k=m} P_k$. However, since mobile-telephones 14-*k* are indoors, the interference level (due to the presence of building 27) is greater between MT 14-*k* and BS 12 than between MT 14-*j* and BS 12. Thus, the power level P_k required for mobile-telephones 14-*k* to receive signal 20-*k* at an acceptable signal level will likely be higher than the power level P_j required for mobile-telephones 12-*j* to receive signal 16-*j* at an acceptable signal level, i.e., P_k is likely greater than P_j. Because MT 14-*k* utilize more of BS 12's transmission power resources, the number of mobile-telephones that BS 12 can be in communication simultaneously is reduced.

One way to increase the capacity in the situation depicted in FIG. 2 is to use a device referred herein as a concentrator. FIG. 2a illustrates a wireless communication system in which a concentrator 25 is incorporated. Concentrator 25 is a device having the functionality of a base station. Specifically, concentrator 25 is configured to communicate with mobile-telephones in building 27, such as MT 14-*k*, using frequency f_2 and with base station 12 using frequency f_1. Any transmission from BS 12 to MT 14-*k*, or vice-versa, goes through concentrator 25. For example, BS 12 transmits a signal having a message intended for MT 14-*k* to concentrator 25 over a communication channel on frequency f_1. Upon receipt of the signal, concentrator 25 demodulates the message and re-modulates the message for re-

transmission to MT 14-k over a communication channel on frequency f_2, wherein the signal transmitted from BS 12 to concentrator 25 is transmitted at power level P_c. Advantageously, the transmission power P_c associated with a frequency f_1 signal being transmitted from concentrator 25 to BS 12 would be less than the transmission power P_k associated with a frequency f_1 signal being transmitted from MT 14-k directly to BS 12 (since signal be would not suffer interference due to building 27 before arriving at the concentrator). Thus, the total transmission power P_{BS} of BS 12 would be equal to sum of P_j plus mP_c, where m-n-1 corresponds to the number of mobile-telephones inside building 27 in communication with BS 12 via concentrator 25, i.e., $P_{BS} = \sum_{j=1}^{j=n} P_j + (\mathrm{m-n-1})P_c$.

When BS 12 desires to page a mobile-telephone, BS 12 transmits a paging signal using a paging channel on frequency f_1 associated with that mobile-telephone. Each mobile-telephones is associated with only one paging channel from a set of paging channels on frequency f_1. Thus, different mobile-telephones may be associated with different paging channels on frequency f_1. In order for concentrator 25 to detect paging signals on different frequency f_1 paging channels intended for MT 14-k in building 27 (and subsequently re-transmit on a paging channel on frequency f_2), concentrator 25 needs to be capable of at least monitoring all the paging channels associated with the mobile-telephones 14-k. However, concentrators are typically capable of only monitoring a single paging channel on frequency f_1. Thus, unless the paging channel associated with the mobile-telephone to which the paging signal is intended is identical to the paging channel being monitored by (or associated with) concentrator 25, the paging signal will not be detected by concentrator 25 (and will not be re-transmitted to the intended mobile-telephone). According, there exist a need for a concentrator to detect a paging signal intended for a mobile-telephone having an associated paging channel on frequency f_1 different than a paging channel on frequency f_1 associated with the concentrator.

SUMMARY OF THE INVENTION

The present invention is a method and apparatus for detecting a paging signal intended for a mobile-telephone having an associated frequency f_1 paging channel different from a frequency f_1 paging channel associated with a concentrator. The present invention uses the paging channel on frequency f_1 associated with the concentrator to send a paging signal to a mobile-telephone having an associated paging channel on frequency f_1 different than the concentrator's paging channel on frequency f_1. In one embodiment, a base station transmits a base station-to-mobile-telephone (BS-MT) paging message by including such BS-MT paging message in a base station-to-concentrator (BS-C) paging message. The BS-MT paging message includes a message portion and a mobile-telephone identifier portion, wherein the mobile-telephone identifier portion indicates the mobile-telephone to which the BS-MT paging message is intended. The BS-C paging message includes the MT paging message and a concentrator identifier portion for indicating the concentrator to which the BS-C is intended. The BS-C paging message is transmitted over a paging channel on frequency f_1 associated with the intended concentrator (i.e., concentrator through

which the mobile-telephone is linked to the base station). The intended concentrator detects the BS-C paging message by monitoring its associated paging channel on frequency f_1 for a BS-C paging message with a concentrator identifier portion indicating the concentrator. Upon detecting irs BS-C paging message, the concentrator parses the BS-MT paging message from the BS-C message and transmits the BS-MT paging message to the intended mobile-telephone using a paging channel on frequency f_2 being monitored by the mobile-telephone.

In one embodiment, the base station uses a location registry to determine the paging channel on frequency f_1 over which to send a BS-MT paging message to the mobile-telephone, wherein the location registry includes information indicating whether a mobile-telephone linked to the base station via a concentrator and, if applicable, a concentrator identifier and an indication of the paging channel associated with the concentrator. If the intended mobile-telephone is linked to the base station via a concentrator, the base station uses the location registry to determine the paging channel on frequency f_1 associated with the concentrator before sending a BS-C paging message having the BS-MT paging message on that paging channel.

BRIEF DESCRIPTION OF THE DRAWINGS

The features, aspects, and advantages of the present invention will become better understood with regard to the following description, appended claims, and accompanying drawings where

FIG. 1 depicts a wireless communication system comprising at least one base station in communication with a plurality of mobile-telephones;

FIG. 2 depicts a wireless communication system of FIG. 1 where some mobile-telephones are indoors;

FIG. 2a depicts a wireless communication system of FIG. 2 in which a concentrator is incorporated;

FIG. 3 depicts a wireless communications system used in accordance with the present invention;

FIG. 4 depicts a flow chart illustrating a registration process in accordance with the present invention;

FIG. 5 depicts a flow chart illustrating a paging process in accordance with the present invention;

FIG. 6 depicts one embodiment of a data structure for a BS-MT paging message; and

FIG. 7 depicts one embodiment of a data structure for a concentrator message.

DETAILED DESCRIPTION

FIG. 3 depicts a wireless communications system 30 used in accordance with the present invention. Wireless communications system 30 comprises at least one base station 32, a plurality of mobile-telephones 34-j outdoors, a plurality of mobile-telephones 34-k indoors and at least one concentrator 38, wherein concentrator 38 is a device having base station functionality, j=1,...,n and k=n+1,...,m. MT 34-j and 34-k being operable to communicate with BS 32 using frequency f_1, and to

communicate with concentrator 38 using frequency f_2. Concentrator 38 being operable to communicate with base station 32 using frequency f_1. For illustrative purposes, concentrator 38 is shown as being mounted on top of a building 40 and configured to communicate with mobile-telephones in building 40, such as MT 34-*k*, using frequency f_2 and with base station 32 using frequency f_1. In one embodiment, frequency f_1 is identical to frequency f_2. In another embodiment, frequency f_1 is not identical to frequency f_2. In a third embodiment, frequency f_1 is any wireless operating frequency, such as the frequencies associated with cellular, PCS or ISM, and frequency f_2 is not a wireless operating frequency. Note that frequencies f_2 and f_1 include uplink and downlink frequencies.

In order to use the services of base station 32, mobile-telephones 34-*j* and 34-*k* are required to first register with base station 32. FIG. 4 depicts a flow chart 400 illustrating a registration process in accordance with the present invention. In step 405, when a mobile-telephone is powered on, it first searches frequency f_2 for a signal transmitted from concentrator 38. If the mobile-telephone detects a frequency f_2 signal, e.g., MT 34-*k*, the mobile-telephone transmits a concentrator registration signal (CRS) to concentrator 38 using a communication channel on frequency f_2, in step 410, wherein the concentrator registration signal includes a first set of mobile-telephone information, such as a mobile-telephone identification number (MIN), which is a unique mobile-telephone identifier. In steps 415 and 420, concentrator 38 registers the mobile-telephone in a concentrator registry using the first set of mobile-telephone information, and then transmits a verification signal to the mobile-telephone using a paging channel on frequency f_2 and a concentrator to base station (C-BS) registration signal to BS 32 using an access channel on frequency f_1, wherein the verification signal indicates to the mobile-telephone that it has been registered with the concentrator and the C-BS registration signal includes at least a portion of the first set of mobile-telephone information and concentrator information, such as a concentrator identification number or some other concentrator identifier. Note that the present invention should not be limited to paging and access channels on frequencies f_1 and f_2. Other communication channels may also be used.

Upon receiving the verification signal, in step 425, the mobile-telephone will know that it has been registered with concentrator 38 and, thus, will know to use frequency f_2 to receive and transmit signals from and to concentrator 38 and BS 12 (through concentrator 38). Upon receiving the C-BS registration signal from concentrator 38, in step 430, base station 32 uses the mobile-telephone and concentrator information in the C-BS registration signal to register the mobile-telephone (associated with the mobile-telephone information contained in the C-BS registration signal) in a location registry, such as a home or visitor location registry or some other location registry associating the mobile-telephone to the concentrator. Note that the location registry should indicate an association between the mobile-telephone and concentrator 38 in this instance.

In step 435, concentrator 38 periodically checks to determine whether the mobile-telephone is still within the range of concentrator 38. If the mobile-telephone is no longer within the concentrator's range, the mobile-telephone is removed from the concentrator registry and a signal is

transmitted to BS 32 via the access channel on frequency f_1 an update C-BS registration signal to indicate to BS 32 to unregister the mobile-telephone in its location registry, in step 440.

If the mobile-telephone does not detect a frequency f_2 signal, the mobile-telephone then searches frequency f_1 for a signal transmitted from base station 32, in step 445. If the mobile-telephone does not detect a frequency f_1 signal, the mobile-telephone cannot gain system access to wireless communications system 30. If the mobile-telephone detects a frequency f_1 signal, e.g., MT 34-*j*, the mobile-telephone transmits a mobile-telephone to base station (MS-BT) registration signal to base station 32 using frequency f_1, in step 450, wherein the MT-BS registration signal includes a second set of mobile-telephone information, such as the MIN. Note that the first and second set of mobile-telephone information may be identical, overlapping or different. Upon receiving the MT-BS registration signal from the mobile-telephone, in step 455, base station 32 uses the second set of mobile-telephone information to register the mobile-telephone (associated with the mobile-telephone information contained in the MT-BS registration signal) in the location registry.

Once the mobile-telephone is registered at BS 32 in the location registry, BS 32 can page the mobile-telephone using one of a plurality of paging channels on frequency f_1. BS 32 pages the mobile-telephone by transmitting a paging signal over a paging channel directly or indirectly associated with the mobile-telephone to which the paging signal is intended. FIG. 5 depicts a flow chart 500 illustrating a paging process in accordance with the present invention. In step 505, BS 32 has a page to send to a mobile-telephone. In step 510, BS 32 looks at the location registry to see whether the mobile-telephone has been registered. If BS 32 determines that the mobile-telephone has not been registered, BS 32 does nothing, in step 515. If the mobile-telephone has been registered, BS 32 uses the location registry to determine whether the mobile-telephone is associated with a concentrator, in step 520. Recall that an association will be indicated in the location registry between the mobile-telephone and concentrator 38 if the mobile-telephone was registered with BS 32 via concentrator 48.

If the mobile-telephone is not associated with a concentrator, e.g., MT 34-*j*, BS 32 determines what paging channel on frequency f_1 is associated with the mobile-telephone before paging the mobile-telephone with a BS-MT paging signal, in steps 525 and 530. A paging channel can be associated with a mobile-telephone in a variety of manners. One such manner involves using the MIN and a well-known paging channel hashing algorithm, such as the paging channel hashing algorithm defined in code division multiple access standards. For example, the paging channel hashing algorithm will output the last digit of the MIN, which will indicate the paging channel associated with the mobile-telephone. Note that the mobile-telephone will only monitor for pages on its associated paging channel on frequency f_1. In one embodiment, the BS-MT paging signal includes a BS-MT paging message comprising the MIN and a message for the mobile-telephone to which the paging signal is intended. See FIG. 6, which depicts a possible data structure 60 for a BS-MT paging message.

In step 535, the mobile-telephone detects the BS-MT paging signal by searching its associated paging channel on frequency f_1 for a BS-MT paging signal intended for it (as indicated by the

MIN, for example). In step 540, the mobile-telephone can respond by transmitting a MT-BS page response signal over an access channel on frequency f_1, wherein the MT-BS page response includes mobile-telephone information, such as the MIN, and an appropriate response message.

If the mobile-telephone is associated with a concentrator, e.g., MT 34-*k*, BS 32 determines what paging channel on frequency f_1 is associated with the concentrator before transmitting a base station-to-concentrator (BS-C) paging signal to the mobile-telephone via that paging channel, in steps 545 and 550. In one embodiment, the BS-C paging signal includes a concentrator message having the concentrator identification number and an encapsulated message, wherein the encapsulated message includes one or more BS-MT paging messages having MINs and messages for one or more mobile-telephones to which the paging signal is ultimately intended. See FIG. 7, which depicts a possible data structure 70 for a concentrator message. Note that the concentrator message is essentially the BS-MT paging message with a concentrator identifier portion prepended (or appended) to it.

A paging channel can be associated with a concentrator in a variety of manners. One such manner involves pre-association of paging channels to concentrators, or using the concentrator identification number and the paging channel hashing algorithm. For example, a class is assigned to a concentrator when the concentrator is put into service, wherein each class has an associated paging channel. The total number of classes is limited to seven or less (for a three bit value), wherein the value of seven corresponds to a maximum number of paging channels for a base station. When multiple concentrators are located within the coverage area of a base station, the concentrator class assignment should balance the number of concentrators in service among the seven classes. Specifically, in this example, when there are less than seven concentrators in service, each concentrator should be assigned a different class. If there are more than seven concentrators in service, the class may assigned using the following equation:

$$\text{class for } i\text{th concentrator} = ((i-1) \bmod N) + 1 \qquad \text{equation (1)}$$

where N is the number of total paging channels available for association with a class, and not necessarily the total number of paging channels for a base station.

Note that each concentrator preferably has only one frequency f_1 paging channel to which it is associated. This limits the number of paging channels a concentrator has to search (when searching for pages intended for the concentrator). In another embodiment, the concentrator may be configured to search a multitude of paging channels. In this embodiment, the concentrator can determine which paging channels are associated with the mobile-telephones in its concentrator registry and search all such paging channels for pages intended for those mobile-telephones.

In another embodiment, the location registry also indicates a paging channel for the mobile-telephones, wherein the paging channel indicated is a concentrator's paging channel if the mobile-telephone is associated with a concentrator or the mobile-telephone's associated paging channel. Thus, in this embodiment, step 520 is eliminated and steps 525 to 550 are modified.

In step 555, concentrator 38 detects the BS-C paging signal by searching its associated paging channel for a BS-C paging signal intended for it (as indicated by the concentrator identification

number, for example). In step 560, concentrator 38 demodulates the concentrator message from the BS-C paging signal. In steps 565 to 575, concentrator 38 parses the encapsulated message from the concentrator message, modulates the encapsulated message onto a paging channel on frequency f_2 and transmits the modulated encapsulated message as a concentrator-to-mobile-telephone (C-MT) paging signal on the frequency f_2 paging channel. Note that concentrator 38 may use its concentrator registry to check whether the mobile-telephones to which the encapsulate message is intended is still within range of concentrator 38. If the mobile-telephone is no longer registered, concentrator 38 does nothing with the message and provides BS 32 with an update C-BS registration signal over an access channel on frequency f_1 to indicate to BS 32 to unregister the mobile-telephone in its location registry.

Preferably, all mobile-telephones registered with concentrator 38 use a same paging channel. If not, then concentrator 38 parses each individual BS-MT paging message from the encapsulated message, determine a paging channel on frequency f_2 associated with each BS-MT paging message (which may be indicated in the concentrator registry), modulate each BS-MT paging messages onto its appropriate paging channel on frequency f_2, and transmit the modulated BS-MT paging messages.

In step 580, the mobile-telephone detects the C-MT paging signal by searching the one paging channel (or its associated paging channel) on frequency f_2 for a C-MT paging signal intended for it (as indicated by the MIN, for example). In step 585, the mobile-telephone can respond by transmitting a mobile-telephone-to-concentrator (MT-C) page response signal over an access channel on frequency f_2, wherein the MT-C page response signal includes a MT-BS message having mobile-telephone information, such as the MIN, and an appropriate response message to the BS-C message. In step 590, concentrator 38 demodulates the MT-BS message from the MT-C page response signal, modulates the MT-BS message onto an access channel on frequency f_1, and transmit the modulated MT-BS message as a C-BS signal.

The present invention include several possible schemes for assigning paging channels. Five schemes are described herein, but this should not be construed to limit the present invention to these five schemes. Other schemes are possible. In a first scheme, all paging channels may be used to page mobile-telephones and concentrators. The paging channel assigned [R_1] for concentrator j is calculated as follows:

$$R_1 = ((J - 1) \bmod N) + 1 \qquad \text{equation (2)}$$

where N is the total number of supported paging channels and J is the class of the concentrator.

In a second scheme, a set of paging channels is dedicated to the concentrators. The paging channel assigned [R_2] for concentrator j is calculated as follows:

$$R_2 = ((J - 1) \bmod M) + N + 1 \qquad \text{equation (3)}$$

where $N \geq 1$ is the number of paging channels available for regular mobile-telephones excluding those connected to concentrators, $M \geq 1$ is the number of paging channels dedicated only for concentrators, and J is the class of the concentrator.

In a third scheme, only a selected subset of the paging channels is available for use by the concentrators. The paging channel assigned [R_3] for concentrator j is calculated with the following function:

$$R_3 = ((J-1) \bmod K) + Offset + 1 \qquad \text{equation (4)}$$

where $K \geq 1$ is the number of paging channels available for concentrators, Offset≥0 is the offset number from the Primary paging channel where the first paging channel available for the concentrators resides, and J is the class of the concentrator.

Note that the third scheme represents the general case of static paging channel selection for concentrators. By comparison, the first scheme is a special case of the third scheme. In the first scheme, only the supported paging channels are available for concentrators, and these channels are also shared with regular mobile terminals. Thus, K = N, and Offset = 0. The second scheme is also a special case of the third scheme. In the second scheme, a set of M paging channels is dedicated to concentrators, but this set is outside the range of the supported paging channels available for regular mobile terminals. Hence K = M, and Offset = N.

In a fourth scheme, the present invention assigns paging channels with the goal of averaging the load on the system supported paging channels over time using a periodically modified parameter. Such parameter can depend on a System Time jointly and synchronously monitored by base stations and mobile terminals. Therefore, no additional external synchronization would be needed for an event causing re-selection of a paging channel. In an embodiment of the fourth scheme, the paging channel assigned [R_4] for concentrator J is calculated with the following function:

$$R_3 = (((J-1) + \lfloor t/2^{T+1} \rfloor) \bmod K) + Offset + 1 \qquad \text{equation (5)}$$

The parameter t represents the absolute System Time in the units of 2^{16} 80 msec paging slots, or approximately 2.73 min units. Such unit represents a maximal allowable paging slot cycle, according to the current standard TIA/EIA/95-B and TIA/EIA/IS-2000. At the same time, it represents half of the smallest interval for re-selecting the paging channel for concentrator. The parameter 2^{T+1} represents the length of the interval, in units of maximum allowable paging slot cycles, for re-selection of paging channel for concentrators. The value of T can vary from 0 to 15 depending on operational environment. For example, when T = 0, the re-selection interval is equal to the 2 maximum allowable paging slot cycles, or 5.46 min; when T = 15, the re-selection interval is the largest, equal to infinity, and paging channel re-selection becomes independent on the System Time, thereby accommodating third scheme. In short, the fourth scheme represents a general case of paging channel selection for static and dynamic operating environment.

In a fifth scheme, the present invention defines an association of the concentrator class J with a specific value I representing a 32-bit "identity" of the concentrator class. This 32-bit value I can be generated as follows:

$$I = (C_1 \times J + C_2)$$

Where C_1 and C_2 are any pre-selected 28-bit random numbers.

The I is subsequently used by both base station and concentrator in place of the 32 least significant bits of a mobile station IMSI as defined in the current standard TIA/EIA/95-B and TIA/EIA/IS-2000 for hashing selection of the CDMA Channel and Paging Channel Slot.

It is expected that concentrators, as permanently powered devices, will not need to conserve the battery power, and thus will not operate in a slotted mode. As all paging channel slots will be monitored, the base station can communicate with any individual mobile-telephone combined in the concentrator on any paging channel slot. Alternatively, all mobile-telephones combined in the concentrator can have the same slot cycle index, and therefore using the I identity for hashing will result in the same paging channel slot. Therefore, all mobile -telephones combined in the concentrator will be monitoring the same paging channel slot. When it is not the case, the concentrator can monitor all paging channel slots associated with individual identities of mobile terminal combined in the concentrator.

The fifth scheme can also be used for selection of the paging channel instead of schemes 1 through 4, however, inherent flexibility of assigning dedicated paging channels for concentrators outside the supported paging channel range will be missed.

All above schemes are based on assignment of the Concentrator Class J. In one alternative, this value has to be communicated from the Home Location Register (HLR) to the Visited Location Register (VLR) at the time of registration. The HLR will need to maintain an association of individual mobile terminal identities (IMSI) with specific Concentrator Class J. In another alternative, the value J can be communicated by the concentrator to the base station over the air interface during explicit and implicit registrations. The HLR in this case does not need to maintain the J values. In both cases, when the VLR registration record is created, the value of J – which is limited to a maximum of 3 bits – is stored in addition to the mobile terminal IMSI. When the serving system needs to communicate with an individual mobile terminal, it queries the VLR record for this mobile terminal and receives the value of J which is used to derive the Operating Frequency, Paging Channel Number, and Paging Channel Slot monitored by the concentrator.

In one embodiment, concentrator 38 comprises a plurality of antennas for transmitting and receiving signals from BS 32 and mobile-telephones 34-*k*, a modulator/demodulator for modulating and demodulating frequency f_1 and f_2 signals, a multiplexer/demultiplexer for multiplexing and demultiplexing signals or messages onto a communication channel and a processor associated with computer memory and programmed to create and maintain a concentrator registry. Concentrator may also have other software and hardware for performing a variety of base station functionalities.

The present invention is described herein with reference to certain embodiments. Other embodiments are possible. For example, concentrator 38 can be connected to base station 32 via a wired interface (instead of an air interface). Alternately, concentrator 38 can also be connected via a wired or wireless interface to another type of communication device, such as a telephone, another concentrator or a PBX system . In the PBX example, concentrator 38 pages a telephone connected to the PBX system using

a telephone number or some other type of identifier. Accordingly, the present invention should not be limited to the embodiments disclosed herein.

The Claims defining the invention are as follows:

~~We claim:~~

1. A method for paging a mobile-telephone comprising the steps of:

determining a first communication channel associated with a concentrator over which to transmit a message to a communications device; and

transmitting the message over the first communication channel to the concentrator.

2. The method of claim 1, wherein the message includes a mobile identification number and a sub-message for the communications device.

3. The method of claim 1 comprising the step of:

adding a concentrator identification number to the message before transmitting the message.

4. The method of claim 1, wherein the paging channel is determined using a location registry that associates the communications device to the concentrator.

5. The method of claim 4, wherein the paging channel is determined using a paging channel hashing algorithm.

6. The method of claim 4, wherein the paging channel is determined using concentrator classes.

7. The method of claim 1 comprising the additional step of:

associating the concentrator to the communications device in a registry.

8. The method of clam 1 comprising the additional steps of:

receiving the message; and

re-transmitting the received message over a second communication channel.

9. The method of claim 8, wherein the first communication channel uses a frequency f_1 and the second communication channel uses a frequency f_2.

10. The method of claim 8, wherein the frequency f_1 and the frequency f_2 are identical.

11. The method of claim 8, wherein the frequency f_1 and the frequency f_2 are not identical.

12. The method of claim 1 comprising the additional step of:

receiving information associating the communications device to the concentrator.

13. A concentrator comprising:

means for communicating with a base station over a communication channel on frequency f_1;

means for communicating with a communications device over a communication channel on frequency f_2; and

a concentrator registry for storing information associated with the communications device.

14. The concentrator of claim 13, wherein the communications device is a communications device.

15. The concentrator of claim 13, wherein the communications device is a PBX system.

16. A method for paging a communications device comprising the steps of:

monitoring a first communication channel on frequency f_1 associated with a concentrator for a first message having a first identifier indicating the concentrator;

transmitting a second message over a second communication channel on frequency f_2 if the first message is detected, wherein the second message has a second identifier indicating a communications device to which the second message is intended.

17. The method of claim 16, wherein the first message further includes the second identifier.

18. The method of claim 17 comprising the additional step of:

parsing the second message from the first message before transmitting the second message.

19. A method for paging a mobile-telephone, said method being substantially as described herein in relation to any one embodiment with reference to Figures 3 to 7 of the drawings.

20. A concentrator substantially as described herein in relation to any one embodiment with reference to Figures 3 to 7 of the drawings.

21. A method for paging a communications device said method being substantially as described herein in relation to any one embodiment with reference to Figures 3 to 7 of the drawings.

DATED this Fourth Day of April, 2000

Lucent Technologies Inc.

Patent Attorneys for the Applicant

SPRUSON & FERGUSON

FIG. 1

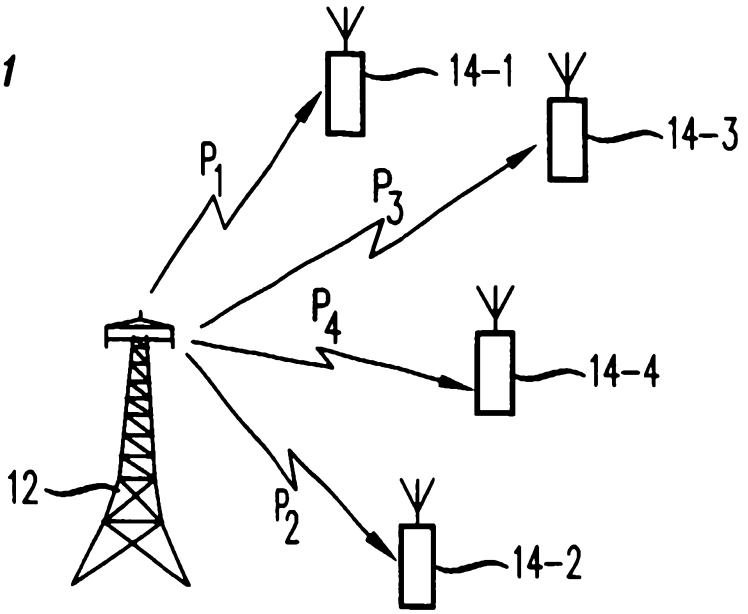
10
14-1
14-3
P1
P3
P4
14-4
12
P2
14-2

FIG. 2

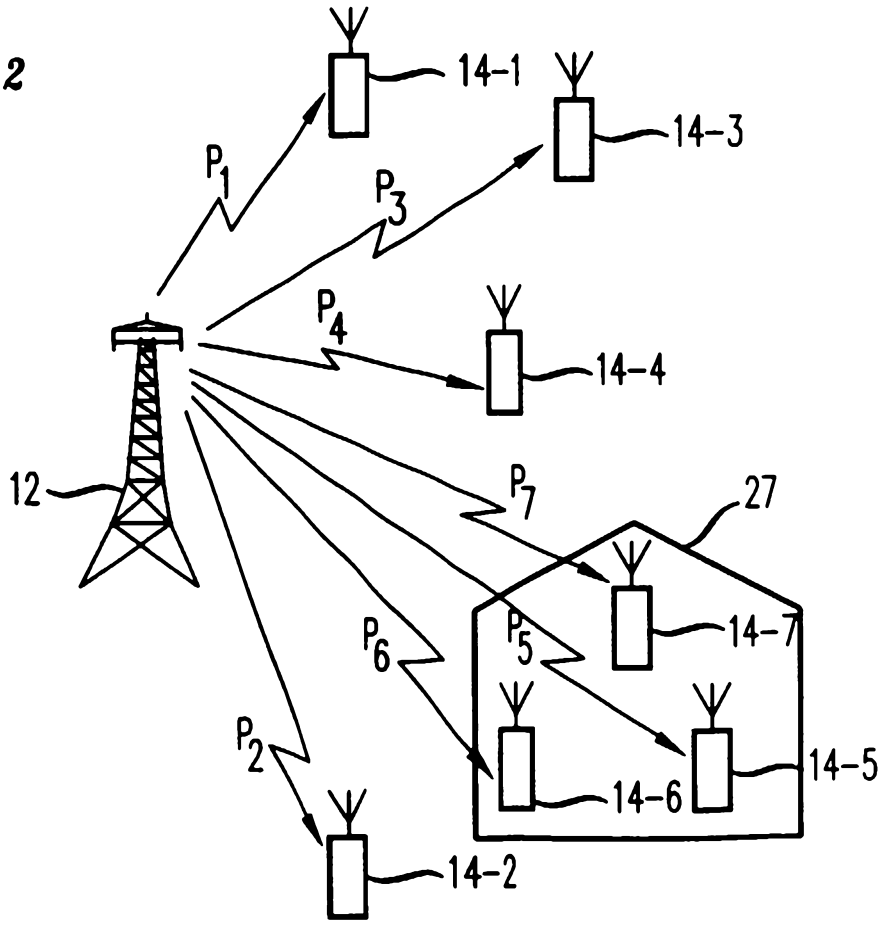
10
14-1
14-3
P1
P3
P4
14-4
12
P7
27
14-7
P6
P5
14-5
14-6
P2
14-2

FIG. 2A

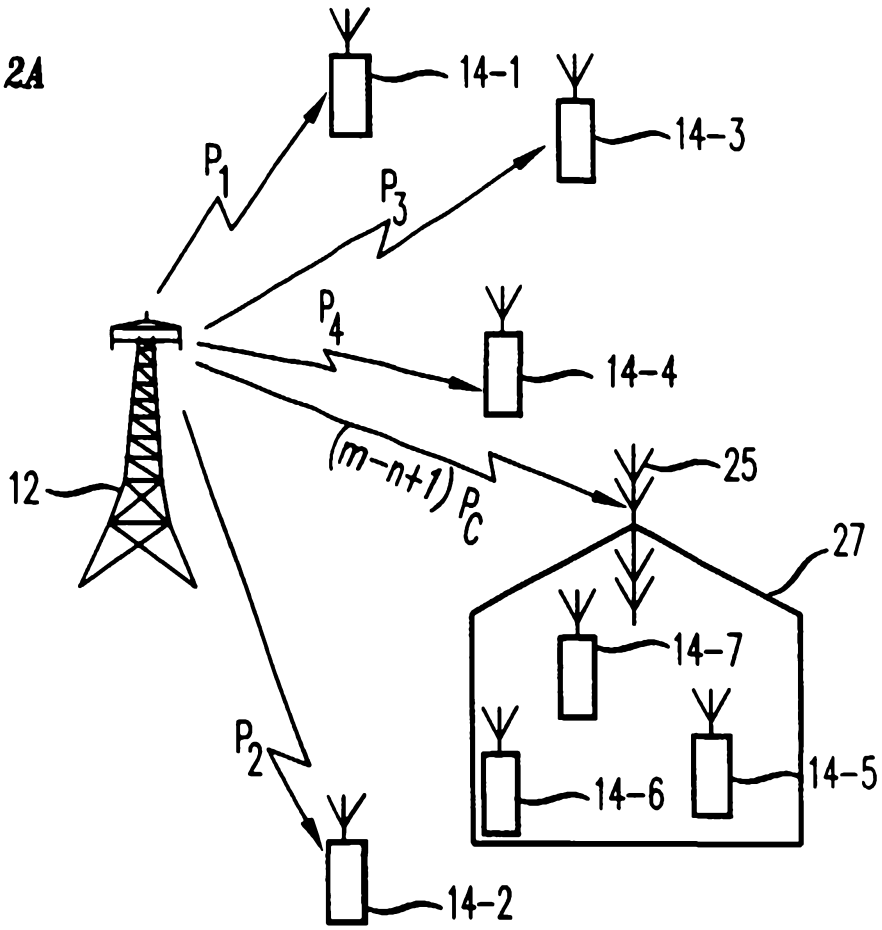
10
14-1
14-3
P1
P3
P4
14-4
12
(m-n+1) Pc
25
27
14-7
14-6
14-5
P2
14-2

FIG. 3

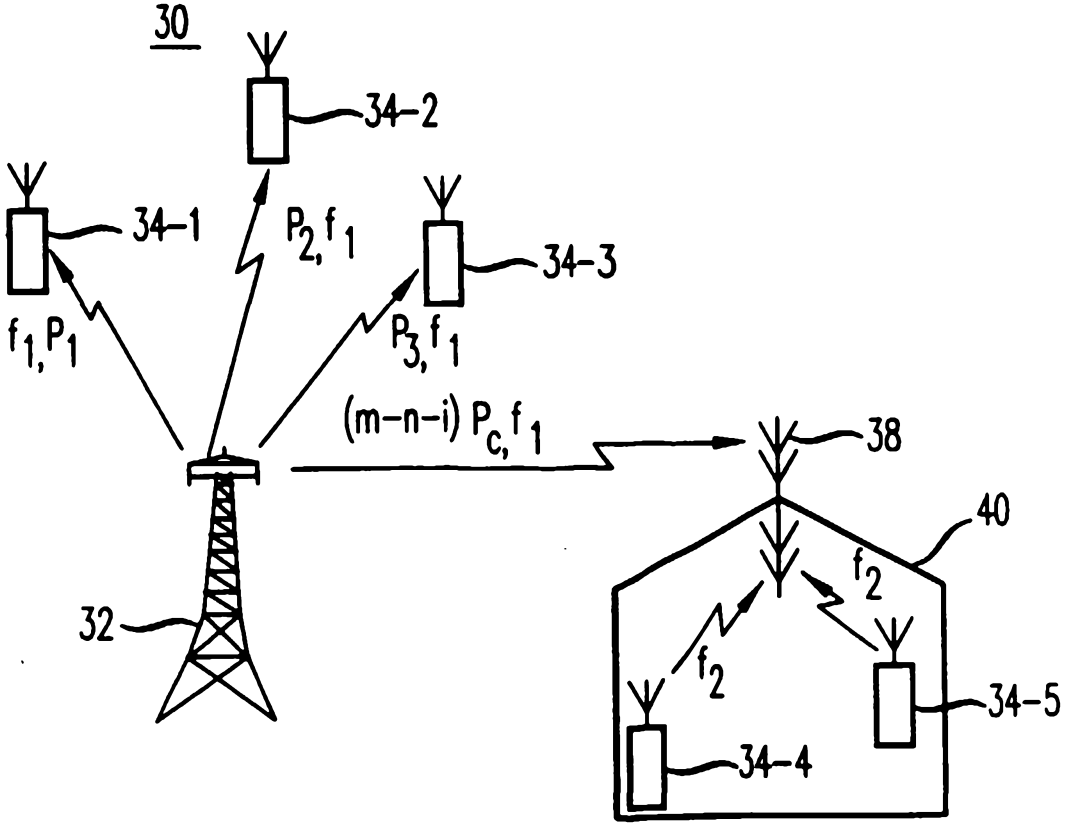
30
34-2
34-1
P2, f1
34-3
f1, P1
P3, f1
(m-n-i) Pc, f1
38
40
f2
f2
32
34-5
34-4

FIG. 4 **400**

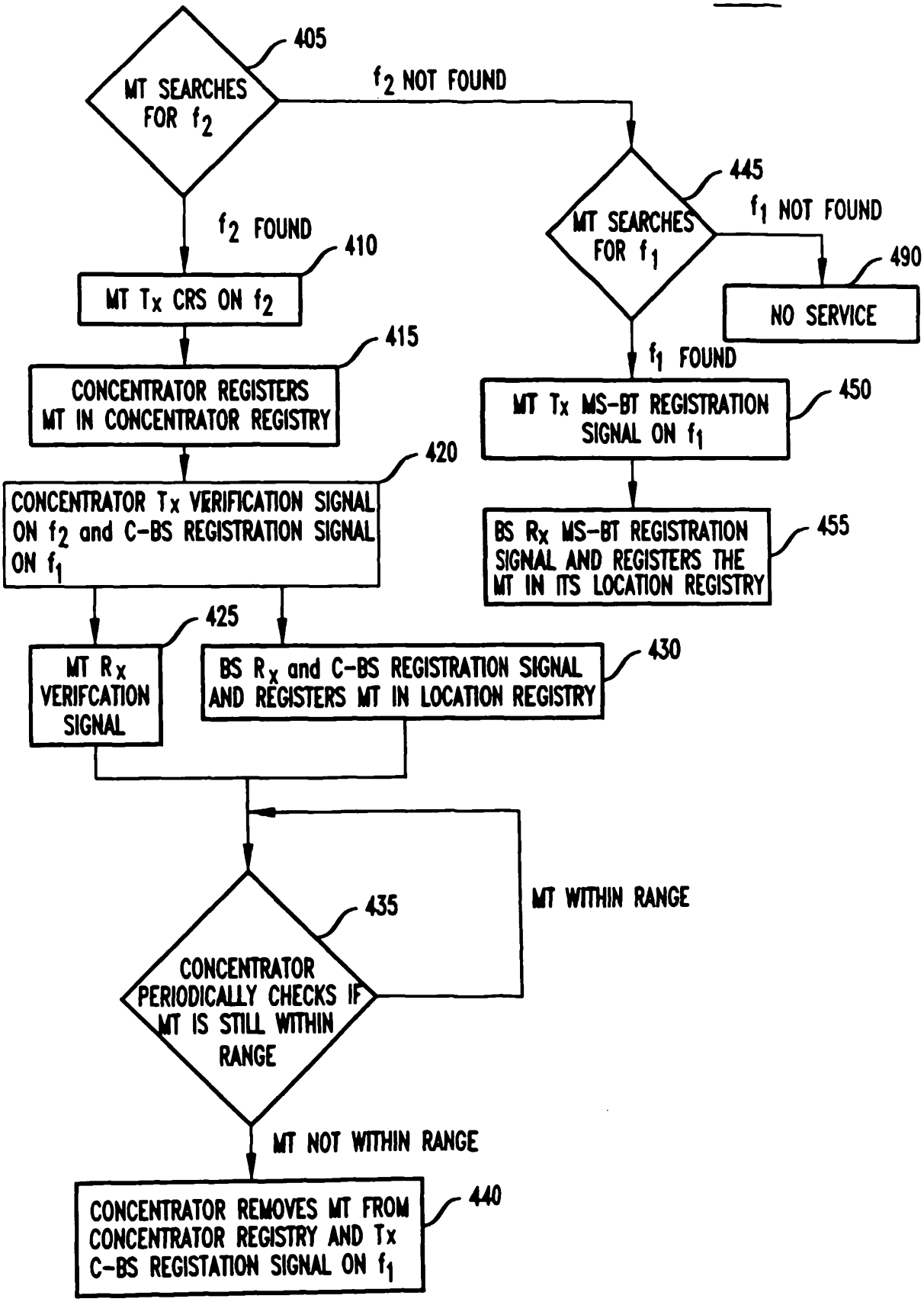
405
MT SEARCHES FOR f_2
f_2 NOT FOUND
f_2 FOUND
410
MT Tx CRS ON f_2
415
CONCENTRATOR REGISTERS MT IN CONCENTRATOR REGISTRY
420
CONCENTRATOR Tx VERIFICATION SIGNAL ON f_2 and C-BS REGISTRATION SIGNAL ON f_1
425
MT Rx VERIFCATION SIGNAL
BS Rx and C-BS REGISTRATION SIGNAL AND REGISTERS MT IN LOCATION REGISTRY
430
435
CONCENTRATOR PERIODICALLY CHECKS IF MT IS STILL WITHIN RANGE
MT WITHIN RANGE
MT NOT WITHIN RANGE
440
CONCENTRATOR REMOVES MT FROM CONCENTRATOR REGISTRY AND Tx C-BS REGISTATION SIGNAL ON f_1
445
MT SEARCHES FOR f_1
f_1 NOT FOUND
490
NO SERVICE
f_1 FOUND
450
MT Tx MS-BT REGISTRATION SIGNAL ON f_1
455
BS Rx MS-BT REGISTRATION SIGNAL AND REGISTERS THE MT IN ITS LOCATION REGISTRY

FIG. 5

500

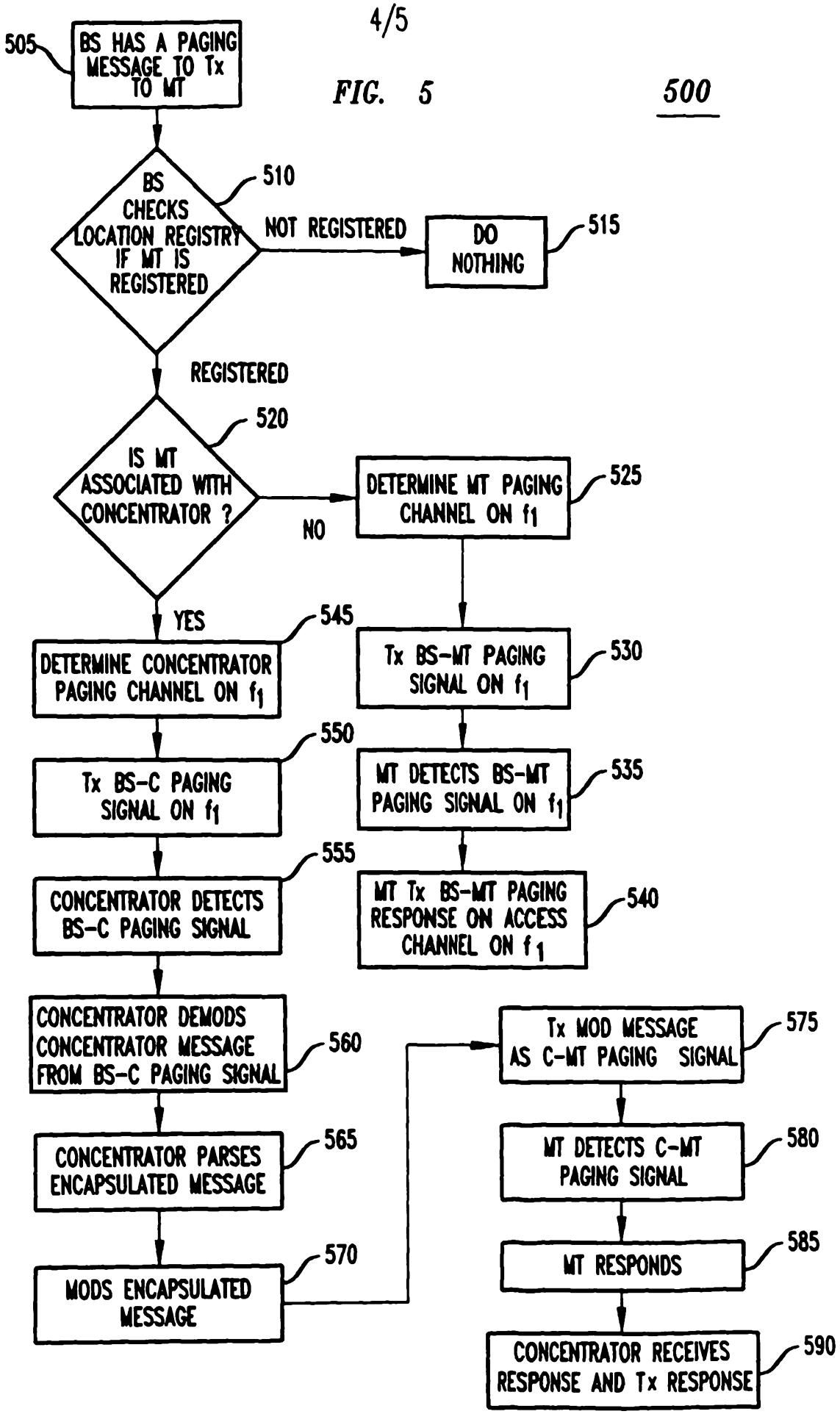
505
BS HAS A PAGING MESSAGE TO Tx TO MT
510
BS CHECKS LOCATION REGISTRY IF MT IS REGISTERED
NOT REGISTERED
515
DO NOTHING
REGISTERED
520
IS MT ASSOCIATED WITH CONCENTRATOR ?
NO
525
DETERMINE MT PAGING CHANNEL ON f_1
YES
545
DETERMINE CONCENTRATOR PAGING CHANNEL ON f_1
530
Tx BS-MT PAGING SIGNAL ON f_1
550
Tx BS-C PAGING SIGNAL ON f_1
535
MT DETECTS BS-MT PAGING SIGNAL ON f_1
555
CONCENTRATOR DETECTS BS-C PAGING SIGNAL
540
MT Tx BS-MT PAGING RESPONSE ON ACCESS CHANNEL ON f_1
CONCENTRATOR DEMODS CONCENTRATOR MESSAGE FROM BS-C PAGING SIGNAL
560
575
Tx MOD MESSAGE AS C-MT PAGING SIGNAL
CONCENTRATOR PARSES ENCAPSULATED MESSAGE
565
580
MT DETECTS C-MT PAGING SIGNAL
MODS ENCAPSULATED MESSAGE
570
585
MT RESPONDS
CONCENTRATOR RECEIVES RESPONSE AND Tx RESPONSE
590

FIG. 6

60

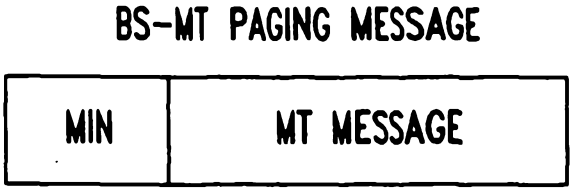

FIG. 7

70

