Oct. 26, 1926.

1,604,118

W. J. GLANCEY

GOLF INSTRUCTOR

Filed March 6, 1926 4 Sheets-Sheet 1

Fig. 1

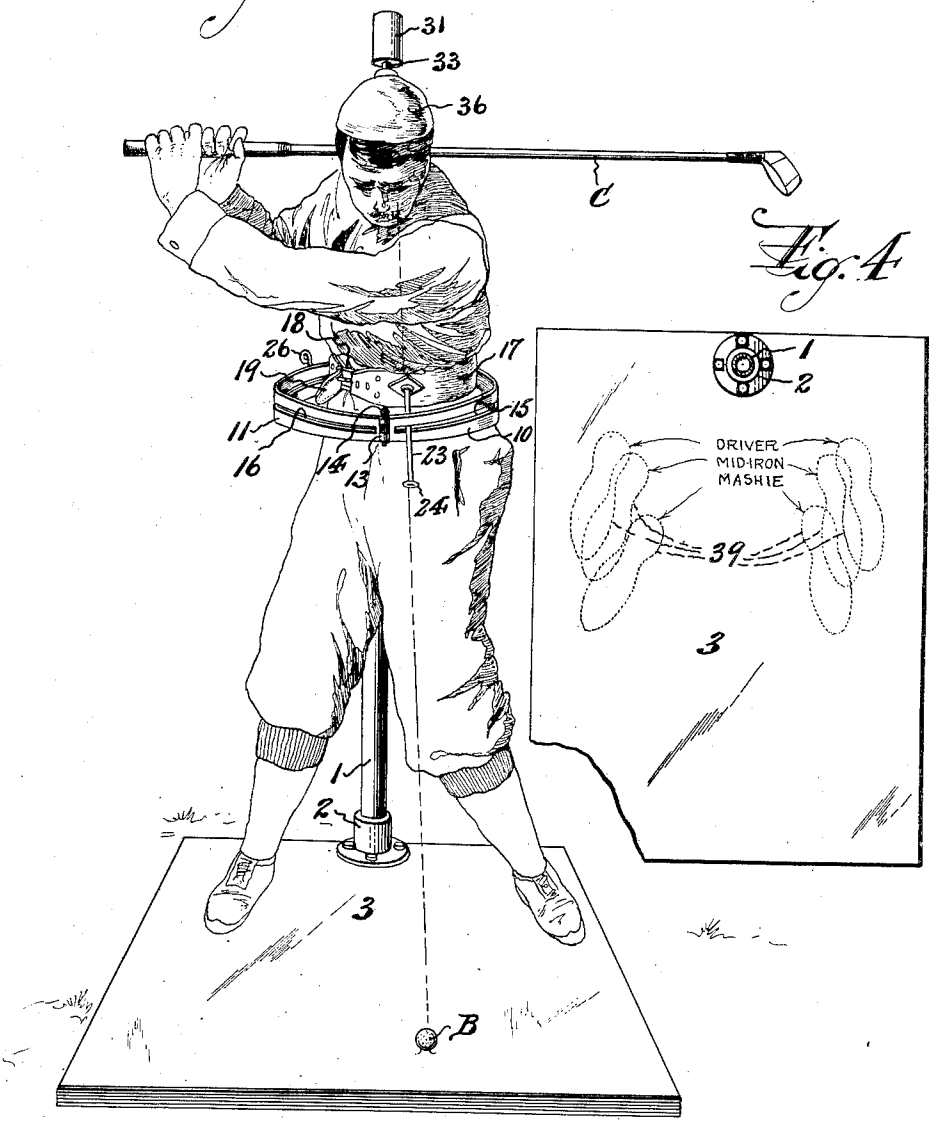

Fig. 4

INVENTOR

William J. Glancey,

BY

Frantzen and Richards,

ATTORNEYS

Oct. 26, 1926. 1,604,118

W. J. GLANCEY

GOLF INSTRUCTOR

Filed March 6, 1926 4 Sheets-Sheet 2

Fig. 2

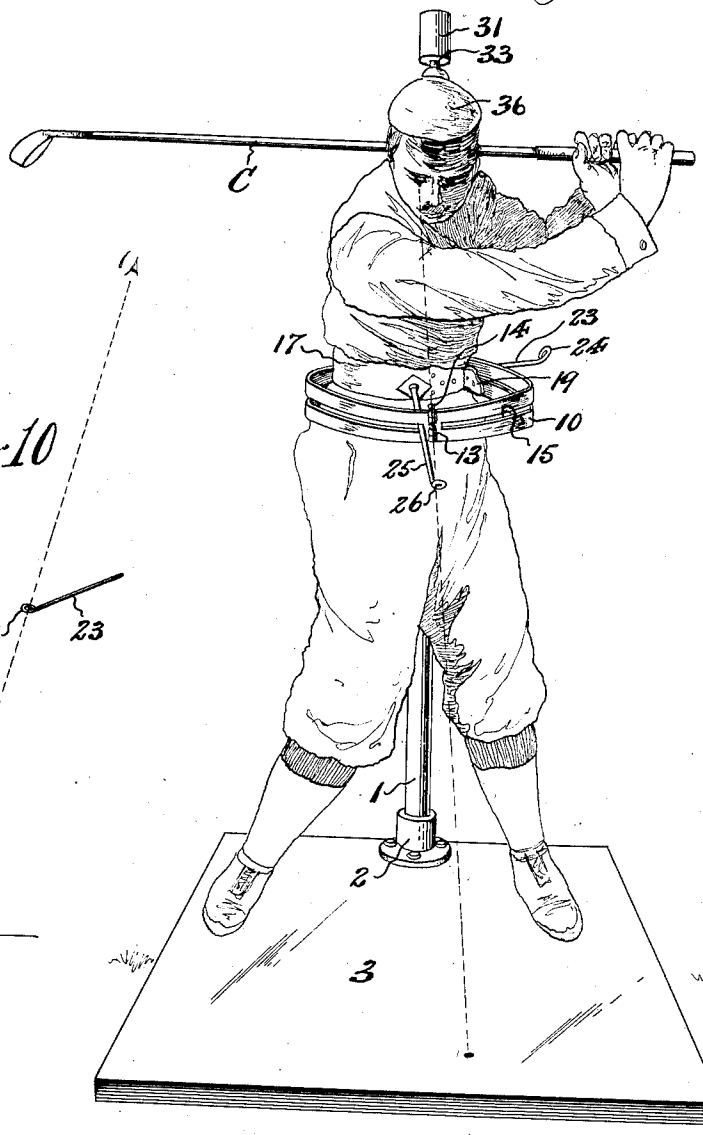

Fig. 10

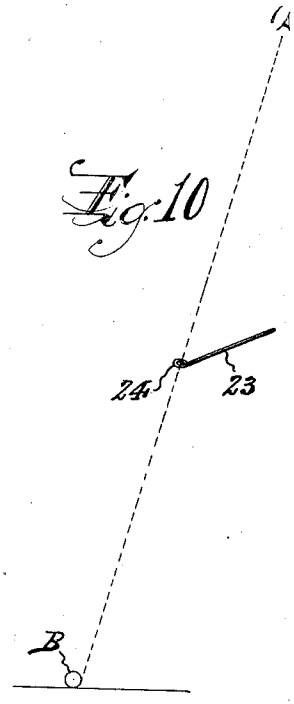

INVENTOR
William J. Glancey,
BY
Fraser & Richards
ATTORNEYS

Oct. 26, 1926. 1,604,118

W. J. GLANCEY

GOLF INSTRUCTOR

Filed March 6, 1926 4 Sheets-Sheet 3

Fig. 5

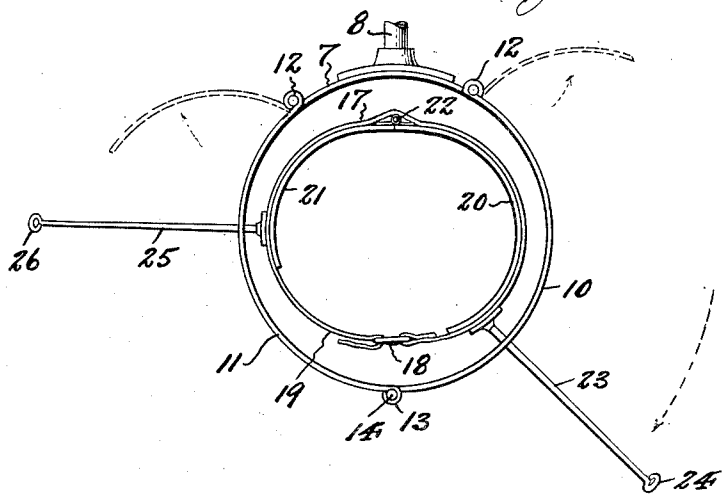

Fig. 6

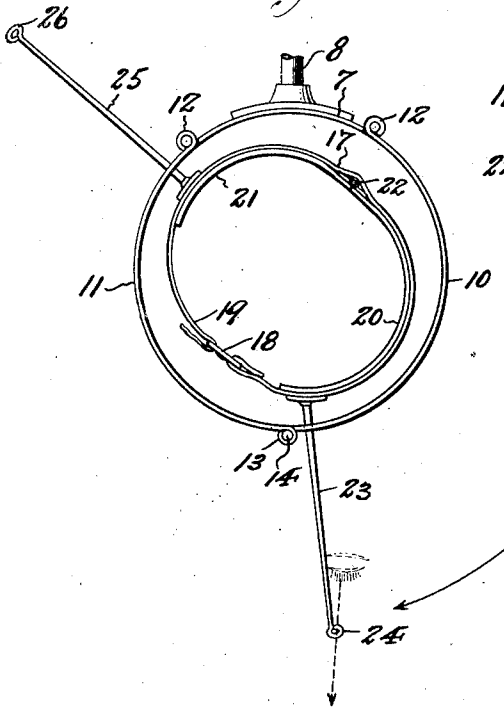

Fig. 7

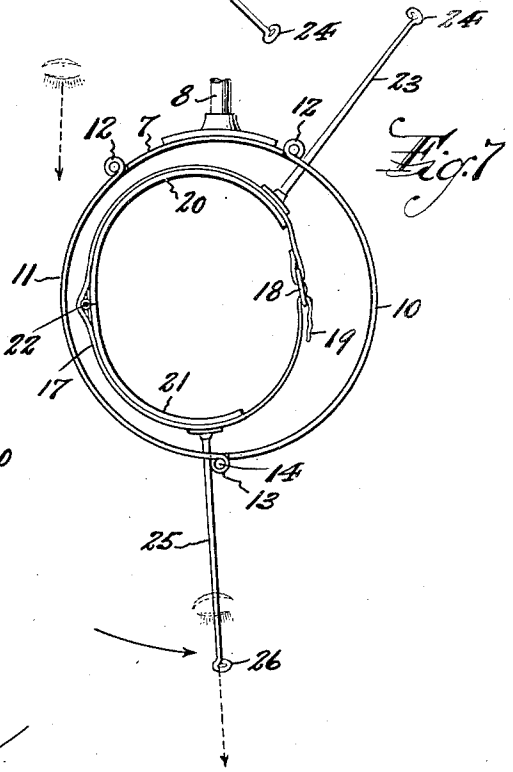

INVENTOR
William J. Glancey,
BY
Fraentzel and Richards
ATTORNEYS

Oct. 26, 1926.

1,604.118

W. J. GLANCEY

GOLF INSTRUCTOR

Filed March 6, 1926 4 Sheets-Sheet 4

Fig. 3

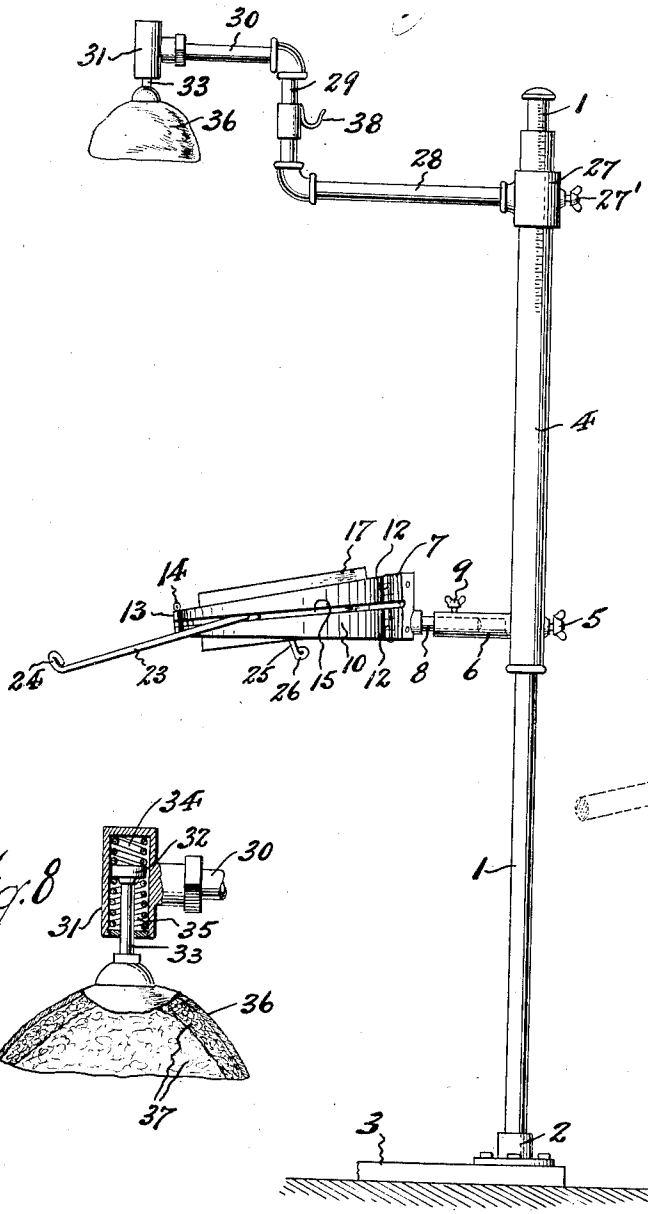

Fig. 9

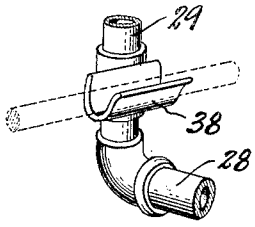

Fig. 8

INVENTOR

William J. Glancey,

BY

Frantzen and Richards

ATTORNEYS

Patented Oct. 26, 1926. 1,604,118

UNITED STATES PATENT OFFICE.

WILLIAM J. GLANCEY, OF MORRISTOWN, NEW JERSEY.

GOLF INSTRUCTOR.

Application filed March 6, 1926. Serial No. 92,663.

This invention relates, generally, to a novel apparatus for instructing and training the user in the correct form and manner of playing the game of golf.

The invention has reference, more particularly, to a novel apparatus for habituating the player to the proper stance and body pose when addressing a golf ball with the club, as well as in the proper body movements which should accompany the swing of the club in order to effect accurate and powerful driving of the golf ball.

Other objects of this invention, not at this time more particularly enumerated, will be clearly understood from the following detailed description of the same.

With the various objects of this invention in view, the same consists, primarily, in the novel golf instructor apparatus hereinafter described; and the invention consists, furthermore, in the novel arrangements and combinations of the various devices and parts, as well as in the details of the construction of the same, all of which will be hereinafter more fully described, and finally embodied in the appended claims.

The invention is clearly illustrated in the accompanying drawings, in which:—

Figure 1 is a front elevation of the novel golf instructor apparatus showing the player in proper initial position addressing the golf ball; Figure 2 is a simliar view, showing the position of the player at the end of a driving stroke or swing with the club; and Figure 3 is a side elevation of the apparatus.

Figure 4 is a plan view of a platform or base with which the apparatus may be provided.

Figure 5 is a detail plan view of the player's body belt provided with the combined guide rods and sighting elements in operative relation to the fixed guide frame of the apparatus; Figure 6 is a similar view showing the body belt and its guide rods and sighting elements as positioned relative to the guide frame when the player is in proper position at the beginning of the club swinging movement; and Figure 7 is a similar view at the end of the club swinging movement.

Figure 8 is a fragmentary sectional view of the yieldable head brace of the apparatus; Figure 9 is a fragmentary perspective of the club stop of the apparatus; and Figure 10 is a diagrammatic view illustrating the manner of utilizing the sighting elements of the player's body belt.

Similar characters of reference are employed in all of the hereinabove described views, to indicate corresponding parts.

Referring now to said drawings, the reference character 1 indicates a main standard which is suitably supported in an upright or vertical position, preferably by connecting the same by a foot piece 2 or like means, with the rearward portion of a suitable platform or base 3.

Slidably mounted on said standard, for vertical adjustment thereon, is a sleeve 4, the same having a set-screw 5, or other suitable means, for fixing it in desired adjusted position. Said sleeve is provided with a forwardly projecting lateral socket element 6.

The reference character 7 indicates a substantially circular guide-frame, to the rear side of which is secured a rearwardly projecting stud or arm 8 which is received in and adjustably related to said socket element 6, the latter having a set-screw 9, or other suitable means, for fixing the stud or arm 8 in desired adjusted position, to in turn properly support said guide frame in forwardly off-set relation to said standard 1. Said guide frame 7 is so constructed that the same may be opened out to admit the player within the embrace of the same, and to this end said guide frame includes side sections 10 and 11, pivotally connected with the fixed section by suitable hinge elements 12. The free ends of said side sections 10 and 11 are provided with interengaging tubular knuckles 13, which, when registered together, may receive a removable lock-pin 14 for retaining said side sections in operative closed together position. The side section 10 of the guide frame is provided with a guiding means, preferably in the form of a slotted guideway 15, which extends from a point adjacent to its forward end rearwardly toward the back of said guide frame; and, in like manner, the side section 11 is provided with a similar slotted guideway 16, which likewise extends from a point adjacent to its forward end rearwardly toward the back of said guide frame. It will be understood that various modifications in mechanical detail or design may be made in the above described construction of guide frame without departing from the scope of this invention, and consequently I do not limit my-

self to the exact details of construction thereof as illustrated in the accompanying drawings, and as above described.

The reference character 17 indicates a detachable body belt adapted to be worn about the waist of the player using the apparatus, the same being provided with means to cooperate with the guide frame, when the player stands within the embrace of the latter, the same comprising a flexible body member, made of leather or other suitable material, and provided at one forward end with a suitable buckle or other desired fastening means 18 to separably cooperate with the opposite forward end 19 thereof. The body of the belt is reenforced by rigid arcuate members, preferably made of metal, comprising a left side member 20 and a right side member 21, which are suitably secured to the belt body, and the rearward meeting ends of which are pivotally interconnected by a hinge 22, so that the same may be swung apart when applying the belt to or removing it from the waist of the user. Secured to said belt body in connection with the left side reenforcing member 20 is a laterally projecting rigid guide arm 23, so disposed as to project outwardly from the left side of the wearer of the belt, and from a point slightly forward of the left hip of the wearer. The free end of said guide arm 23 terminates in a ring-like element 24, the perforation of which serves as an eye-sight means, in the manner to be subsequently explained. Secured to said belt body in connection with the right side reenforcing member 21 is a laterally projecting rigid guide arm 25, so disposed as to project outwardly and sidewise from the right side of the wearer of the belt, and from a point substantially in line with the right hip of the wearer. The free end of said guide arm 25 also terminates in a ring like element 26 to provide an eye-sight for purposes to be subsequently set forth.

Vertically adjustable on the upper end of the sleeve 4, from which the guide frame 7 is supported, is a secondary sleeve 27 to which is secured a forwardly projecting bracket 28 having at its outer end an upturned extension 29 to which is in turn secured a forwardly extending arm 30. Mounted on the extremity of said arm 30 is a vertically disposed cylindrical barrel 31, in which is slidably arranged a plunger 32, the stem 33 of which projects downwardly and exteriorly from the lower end of said cylindrical barrel 31. Arranged within said barrel 31 above said plunger 32 is a compression spring 34, and, if desired, a similar spring 35 of lesser tension may be arranged between the lower end of the barrel 31 and the underside of said plunger, all whereby a floating yieldable support of said plunger is provided for. Secured to the lower exterior end of said stem 33 is a head brace, preferably in the form of cap 36, the interior side of which may be suitably padded as at 37, to render the same comfortable to the user of the apparatus. Said secondary sleeve 27 is provided with a set screw 27', or other suitable means for locking the sleeve 27 in proper adjusted position to in turn position the head brace in proper relation to the head of the user of the apparatus in accordance with the height of said user. Mounted on the up-turned extension 29 of the bracket 28 is a club-stop 38, the purpose of which will be later described.

In order to assist in adjusting the sleeve 4 according to the height of the user of the apparatus, to bring the guide frame 7 to proper position in accordance with such height, the standard 1 may be provided, if desired, with graduations or calibrations, with reference to which the sleeve 4 may be moved and adjusted. In like manner, to assist in adjusting the secondary sleeve 27 to position the head brace in correspondence to the height of the user of the apparatus, the sleeve 4 on which said secondary sleeve 27 is slidable, may also be provided with graduations or calibrations, if desired, with reference to which the latter may be moved and adjusted.

In making use of the novel golf instructor, the user first dons the body belt 17, so that the same encircles the waist, with the guide arms 23 and 25 properly positioned for outward extension from the hips in the manner already above described. The side members 10 and 11 of the guide frame 7 being opened, the user positions himself upon the platform 3 and within the embrace of said guide frame. In closing and securing the side members 10 and 11, the user so arranges and disposes the guide-arm 23, that the same projects outwardly through the slotted guideway 15 of the left side member 10, and, in like manner, arranges and disposes the guide arm 25 so that the same projects outwardly through the slotted guideway 16 of the right side member 11, thereupon closing the side members 10 and 11 and interlocking their meeting ends together by the pin 14 or other provided fastening. The head brace 36 having been properly adjusted, the user's head is positioned beneath the same, and thereupon, the golf ball B or other suitable mark being placed in proper position in front of the user, and the golf club C grasped, the user is ready to begin practice.

As a further aid in taking the proper stance in addressing the ball B, indicating foot positioning marks 39 may be inscribed on the platform 3, the same being varied according to the position it is desired the feet shall assume preparatory to a given

character of play, all as indicated more particularly in Figure 4 of the drawings.

The head brace 36 together with the proper positioning of the feet compels the player to assume the proper slightly crouched position ready for the swinging of the club C. The player now swings back the club C to proper upwardly raised initial position preparatory to the drive, being aided in determining this proper raised position of the club, by bringing the same into engagement with the club stop 38. In thus swinging back the club C, the player is compelled to turn the body at the waist from left to right, and in so doing causes the guide arm 23 to swing from left to right until stopped at the end of the slotted guideway 15, thus establishing the desired initial position of the body preparatory to the driving swing or stroke of the club. As a further aid to the assumption of such correct bodily position preparatory to the driving stroke, and to habituate the player in training the eyes properly and constantly on the ball being thus addressed, said guide arm 23 is provided with the eye-sight 24 through which the ball is initially sighted, thus compelling the player to turn the body the proper distance to the right in order that the eye-sight 24 of the arm 23 may be interposed between the eye and the ball addressed. In thus turning the body at the waist, while the head is held steady by the head brace and the eye properly directed upon the ball position, not only is the guide arm 23 brought to initial position in its slotted guideway 15, but the guide arm 25 is likewise retracted to an initial position in its slotted guideway 16, all of which is illustrated more particularly in Figures 1 and 6 of the drawings.

The player having thus been compelled to assume the correct stance and bodily pose preparatory to the driving stroke, now swings the club C downward and upward from right to left through the arc of movement proper to the driving stroke. In so doing the guide arms 23 and 25 are caused to ride through their respective slotted guideways 15 and 16 of the guide frame 7, until the guide arm 25 fetches up against the forward end of said slotted guideway 16 thus determining the end of the driving swing plus the desired follow through movement of the club. The player is compelled to properly follow through with driving swing or stroke in order to bring the eye-sight 26 of the guide arm 25 in sighting interposition between the eyes and the ball or mark against which the swing is directed. It will be evident that in making the swing, the guide frame 7 in cooperation with the guide arms moving therethrough will compel the player to make the proper body turning movements, without undue side sway or undue lifting or falling of the body, while at the same time the head brace 36 will aid the player in holding the head still and steadied against the temptation to undesirable turning movement, and yet the head brace 36 will readily yield to the slight uplift of the head which naturally accompanies the follow through movement of the upward swing which ends the stroke. The stationary guide frame as it embraces or encircles the waist of the player, is spaced outwardly from the waist a sufficient distance to assure adequate natural freedom of bodily movement during the stroke, and yet is sufficiently close to the body so as to provide a stop against undue side swaying of the body either to left or right during the making of the driving swing or stroke. Preferably the guide frame 7 is so positioned as to pitch slightly downward from rear to front, or the slotted guideways 15 and 16 themselves are given such slight downward and forward pitch or slope, as to assure the relatively free movement of the guide arms 23 and 25 therethrough which is the natural accompaniment of proper bodily movements incident to the driving stroke.

From the above description it will be readily understood that the use of the novel training apparatus above described will soon habituate the player to the proper stance and the proper bodily movements best calculated to produce correct and powerful driving strokes; and faithful use of the apparatus by the player will not only tend to naturally induce the habit of properly coordinated muscular and bodily movements incident to the proper address of a golf ball, but will also tend to quickly correct improper positions or movements of the body either common to novices or which are the result of improper habits already acquired by more experienced players.

The apparatus may be used as an aid to teaching by professional golf instructors, as well as a home or self trainer for players of the game.

I am aware that changes may be made in the various arrangements and combinations of the various devices and parts making up my novel golf instructor apparatus, as well as in the details of the construction of the same, without departing from the scope or from the principles of the invention as shown in the drawings, described in the foregoing specification, and defined in the following claims.

I claim:—

1. In an apparatus of the kind described, a body belt adapted to be secured around the waist of the user, a stationary guide frame provided with suitable supporting means and within the embrace of which the user may be positioned, and means connected with said body belt to movably cooperate

with said guide frame for compelling proper bodily positions and movements of the user.

2. In an apparatus of the kind described, a body belt adapted to be secured around the waist of the user, a standard, a guide frame within the embrace of which the user may be positioned, means for adjustably mounting said guide frame in supported relation to said standard, and means connected with said body belt to movably cooperate with said guide frame for compelling proper bodily positions and movements of the user.

3. In an apparatus of the kind described, a body belt adapted to be secured around the waist of the user, a standard, a platform having foot positioning marks upon which said standard is mounted, a guide frame within the embrace of which the user may be positioned, means for adjustably mounting said guide frame in supported relation to said standard, and means connected with said body belt to movably cooperate with said guide frame for compelling proper bodily positions and movements of the user.

4. In an apparatus of the kind described, a body belt adapted to be secured around the waist of the user, a standard, a guide frame within the embrace of which the user may be positioned, means for adjustably mounting said guide frame in supported relation to said standard, and means connected with said body belt to movably cooperate with said guide frame for compelling proper bodily positions and movements of the user, a vertically yieldable head brace, and means for adjustably supporting said head brace from said standard and relative to said guide frame.

5. In an apparatus of the kind described, a body belt adapted to be secured around the waist of the user, a standard, a platform having foot positioning marks upon which said standard is mounted, a guide frame within the embrace of which the user may be positioned, means for adjustably mounting said guide frame in supported relation to said standard, and means connected with said body belt to movably coperate with said guide frame for compelling proper bodily positions and movements of the user, a vertically yieldable head brace, and means for adjustably supporting said head brace from said standard and relative to said guide frame.

6. In an apparatus of the kind described, a body belt adapted to be secured around the waist of the user, a stationary guide-frame provided with suitable supporting means and within the embrace of which the user may be positioned, said guide-frame including hinged left and right side members each provided with slotted guideways, means for interlocking the free ends of said side members in encircling relation to the waist of the user, and said body belt having laterally projecting guide arms fixedly secured thereto substantially at opposite sides thereof, said guide arms being adapted to respectively project outwardly through the respective slotted guideways of said guide frame for predetermined guided movement therethrough.

7. In an apparatus of the kind described, a body belt adapted to be secured around the waist of the user, a stationary guide-frame provided with suitable supporting means, and within the embrace of which the user may be positioned, said guide-frame including hinged left and right side members each provided with slotted guideways, means for interlocking the free ends of said side members in encircling relation to the waist of the user, and said body belt having laterally projecting guide arms fixedly secured thereto substantially at opposite sides thereof, said guide arms being adapted to respectively project outwardly through the respective slotted guideways of said guide frame for predetermined guided movement therethrough, said guide arms each having perforate eye-sights at their outer free ends.

8. In an apparatus of the kind described, a body belt adapted to be secured around the waist of the user, a standard, a guide frame within the embrace of which the user may be positioned, means for adjustably mounting said guide frame in supported relation to said standard, said guide frame including hinged left and right side members each provided with slotted guideways, means for interlocking the free ends of said side members in encircling relation to the waist of the user, said body belt having laterally projecting guide arms fixedly secured thereto substantially at opposite sides thereof, said guide arms being adapted to respectively project outwardly through the respective slotted guideways of said guide frame for predetermined guided movement therethrough, a vertically yieldable head brace, and means for adjustably supporting said head brace from said standard and relative to said guide frame.

9. In an apparatus of the kind described, a body belt adapted to be secured around the waist of the user, a standard, a guide frame within the embrace of which the user may be positioned, means for adjustably mounting said guide frame in supported relation to said standard, said guide frame including hinged left and right side members each provided with slotted guideways, means for interlocking the free ends of said side members in encircling relation to the waist of the user, said body belt having laterally projecting guide arms fixedly secured thereto substantially at opposite sides thereof, said

guide arms being adapted to respectively project outwardly through the respective slotted guideways of said guide frame for predetermined guided movement therethrough, said guide arms each having perforate eye-sights at their outer free ends, a vertically yieldable head brace, and means for adjustably supporting said head brace from said standard and relative to said guide frame.

10. In an apparatus of the kind described, a body belt adapted to be secured around the waist of the user, a standard, a platform having foot positioning marks upon which said standard is mounted, a guide frame, means for adjustably supporting said guide frame from said standard, said body belt having laterally projecting guide arms fixedly secured thereto substantially at opposite sides thereof, and said guide frame having guide means with which said arms cooperate and by which movement thereof is both guided and limited.

11. In an apparatus of the kind described, a body belt adapted to be secured around the waist of the user, a standard, a platform having foot positioning marks upon which said standard is mounted, a guide frame, means for adjustably supporting said guide frame from said standard, said body belt having laterally projecting guide arms fixedly secured thereto substantially at opposite sides thereof, said guide frame having guide means with which said arms cooperate and by which movement thereof is both guided and limited, said guide arms each having perforate eye-sights at their outer free ends.

12. In an apparatus of the kind described, a body belt adapted to be secured around the waist of the user, a standard, a platform having foot positioning marks upon which said standard is mounted, a guide frame, means for adjustably supporting said guide frame from said standard, said body belt having laterally projecting guide arms fixedly secured thereto substantially at opposite sides thereof, said guide frame having guide means with which said arms cooperate and by which movement thereof is both guided and limited, a vertically yieldable head brace, and means for adjustably supporting said head brace from said standard and relative to said guide frame.

13. In an apparatus of the kind described, a body belt adapted to be secured around the waist of the user, a standard, a platform having foot positioning marks upon which said standard is mounted, a guide frame, means for adjustably supporting said guide frame from said standard, said body belt having laterally projecting guide arms fixedly secured thereto substantially at opposite sides thereof, said guide frame having guide means with which said arms cooperate and by which movement thereof is both guided and limited, said guide arms each having perforate eye-sights at their outer free ends, a vertically yieldable head brace, and means for adjustably supporting said head brace from said standard and relative to said guide frame.

14. In an apparatus of the kind described, a body belt adapted to be secured around the waist of the user, a standard, a guide frame adjustably supported by said standard, means connected with said belt body adapted to movably cooperate with said guide frame whereby their movement is both guided and limited, a yieldable head brace, and a bracket member to carry said head brace also adjustably supported by said standard.

15. In an apparatus of the kind described, a body belt adapted to be secured around the waist of the user, a standard, a guide frame adjustably supported by said standard, means connected with said belt body adapted to movably cooperate with said guide frame whereby their movement is both guided and limited, a yieldable head brace, a bracket member to carry said head brace also adjustably supported by said standard, and a club positioning stop supported by said bracket member.

In testimony that I claim the invention set forth above I have hereunto set my hand this 4th day of March, 1926.

WILLIAM J. GLANCEY.