United States Patent

[11] 3,594,032

[72] Inventor Max Lampe
Heiligenhaus, Germany

[21] Appl. No. 810,555
[22] Filed Mar. 26, 1969
[45] Patented July 20, 1971

[73] Assignee Firma Arn. Kiekert Sohore
Heiligenhaus, Germany

[32] Priority Mar. 29, 1968
[33] Germany
[31] P 17 03 083.0

[54] VEHICLE DOOR LATCH
12 Claims, 8 Drawing Figs.

[52] U.S. Cl. 292/280, 292/336.3
[51] Int. Cl. E05b 3/00, E05c 17/00
[50] Field of Search 292/280, 336.3, 166, 168, 143, 174, 173

[56] References Cited

UNITED STATES PATENTS

2,634,147	4/1953	Robertson	292/216
2,914,353	11/1959	Roethel	292/280
2,989,860	6/1961	France	292/280
3,159,415	12/1964	Sandor	292/336.3
3,309,128	3/1967	Nash	292/280

FOREIGN PATENTS

1,053,350	3/1959	Germany	292/280

Primary Examiner—Marvin A. Champion
Assistant Examiner—Edward J. McCarthy
Attorney—Karl F. Ross

ABSTRACT: A vehicle door latch has a bolt on the doorpost and a lock on the door in which the bolt is received. A door handle is linked nonpositively to the lock by a hook such that the handle can only actuate the lock when it is pulled away from the door. The bolt is advantageously wedged between a ratchet cam and a body of stiff but resiliently compressible material when fully engaged in the lock to prevent mutual displacement between the door and the doorpost.

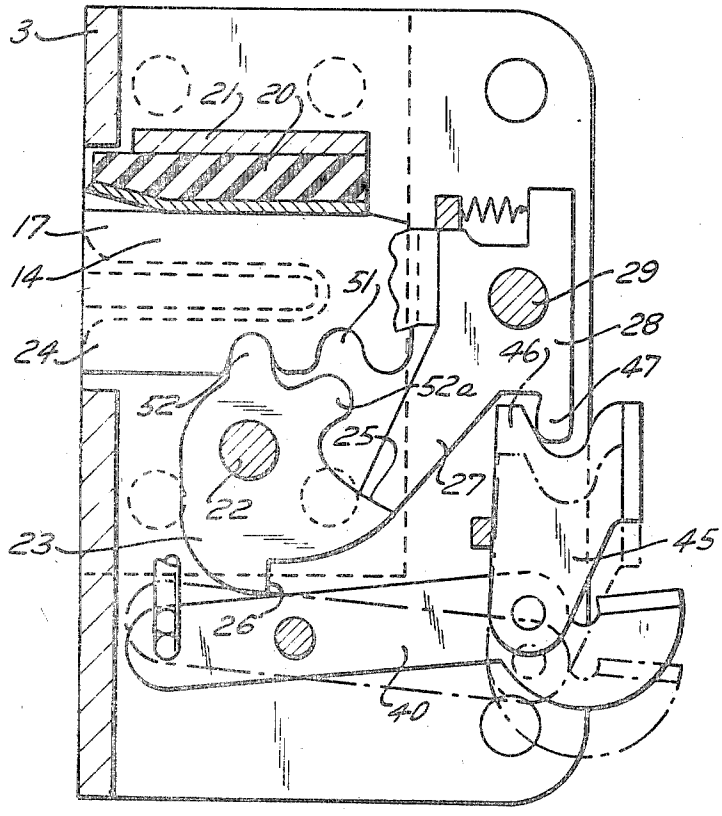

PATENTED JUL 20 1971

3,594,032

SHEET 1 OF 4

FIG. 1

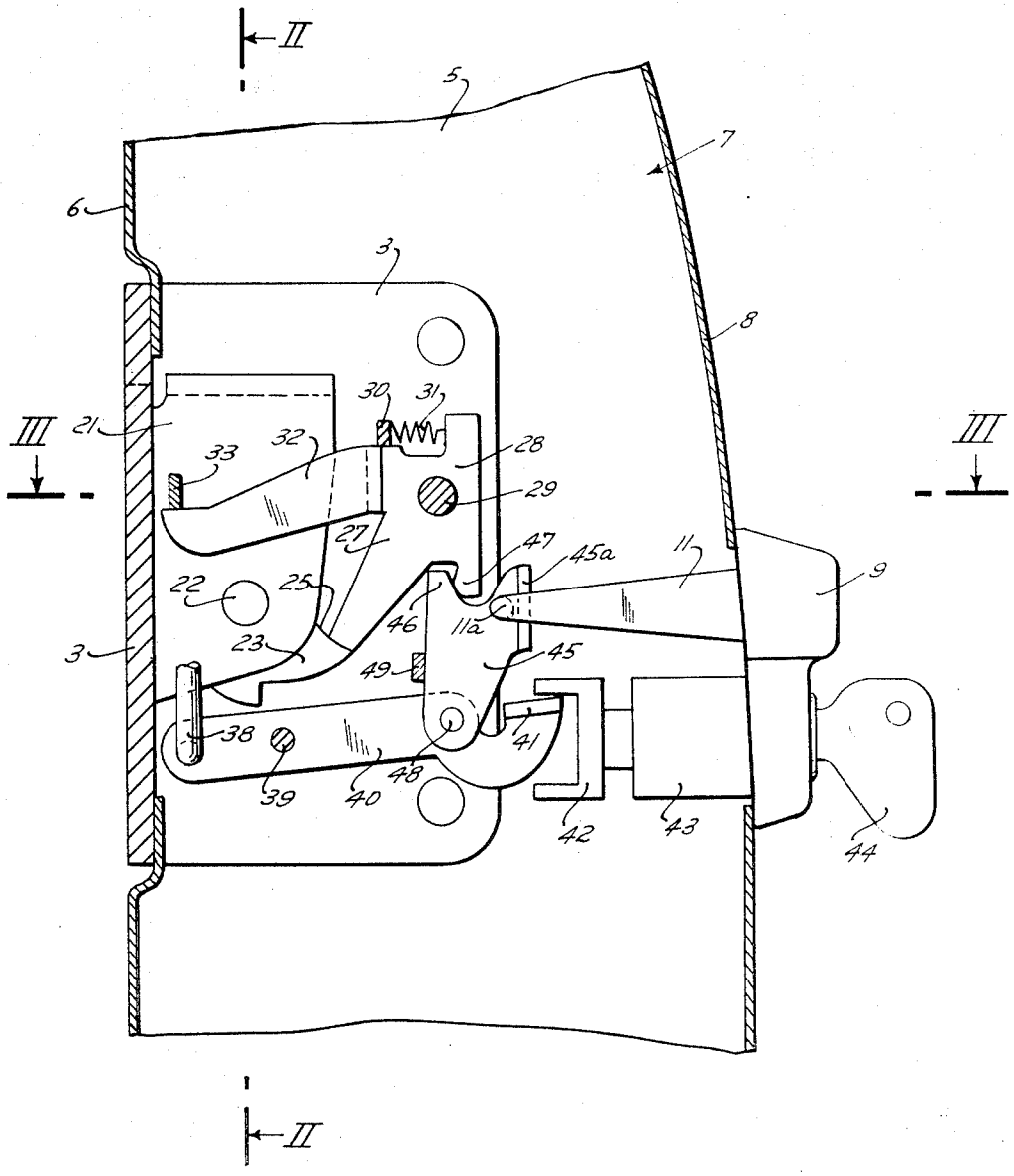

INVENTOR
MAX LAMPE
BY
Karl F. Ross
ATTORNEY

FIG. 2

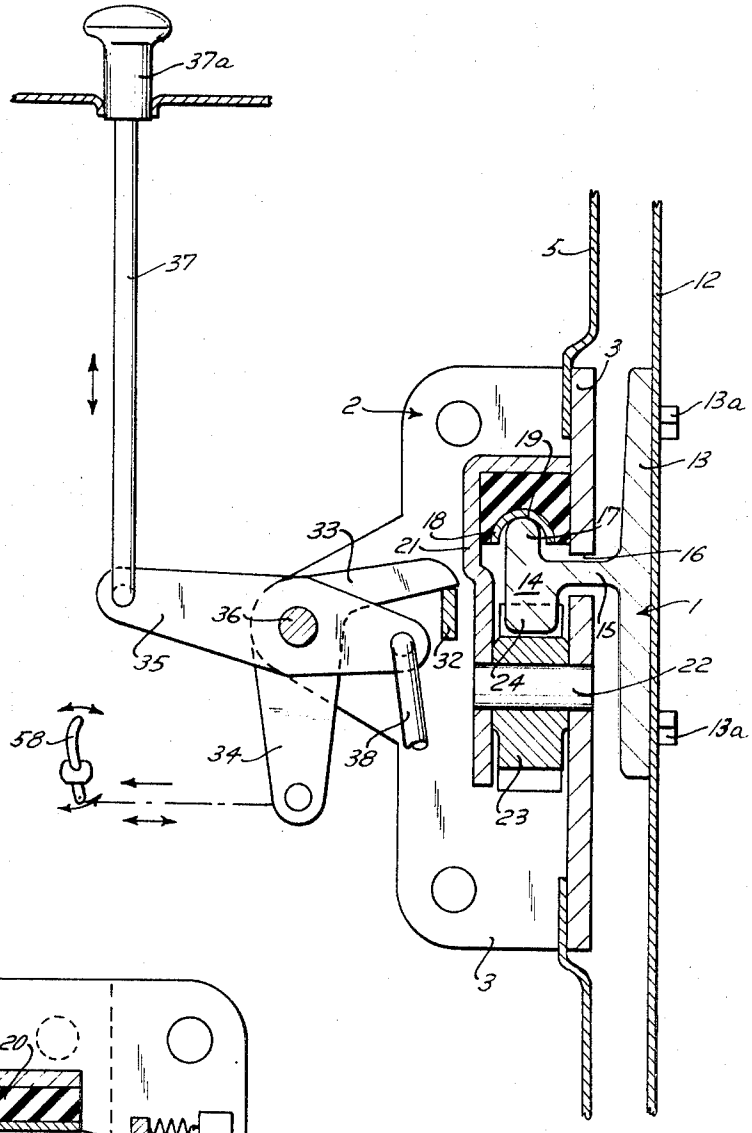

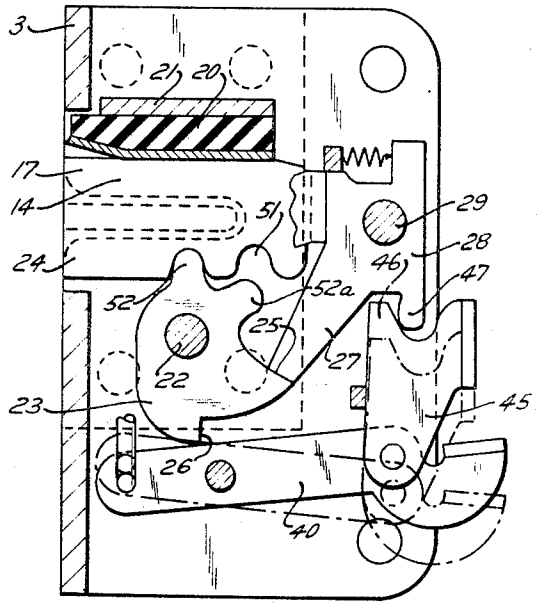

FIG. 5

INVENTOR
MAX LAMPE

BY
Karl F. Ross
ATTORNEY

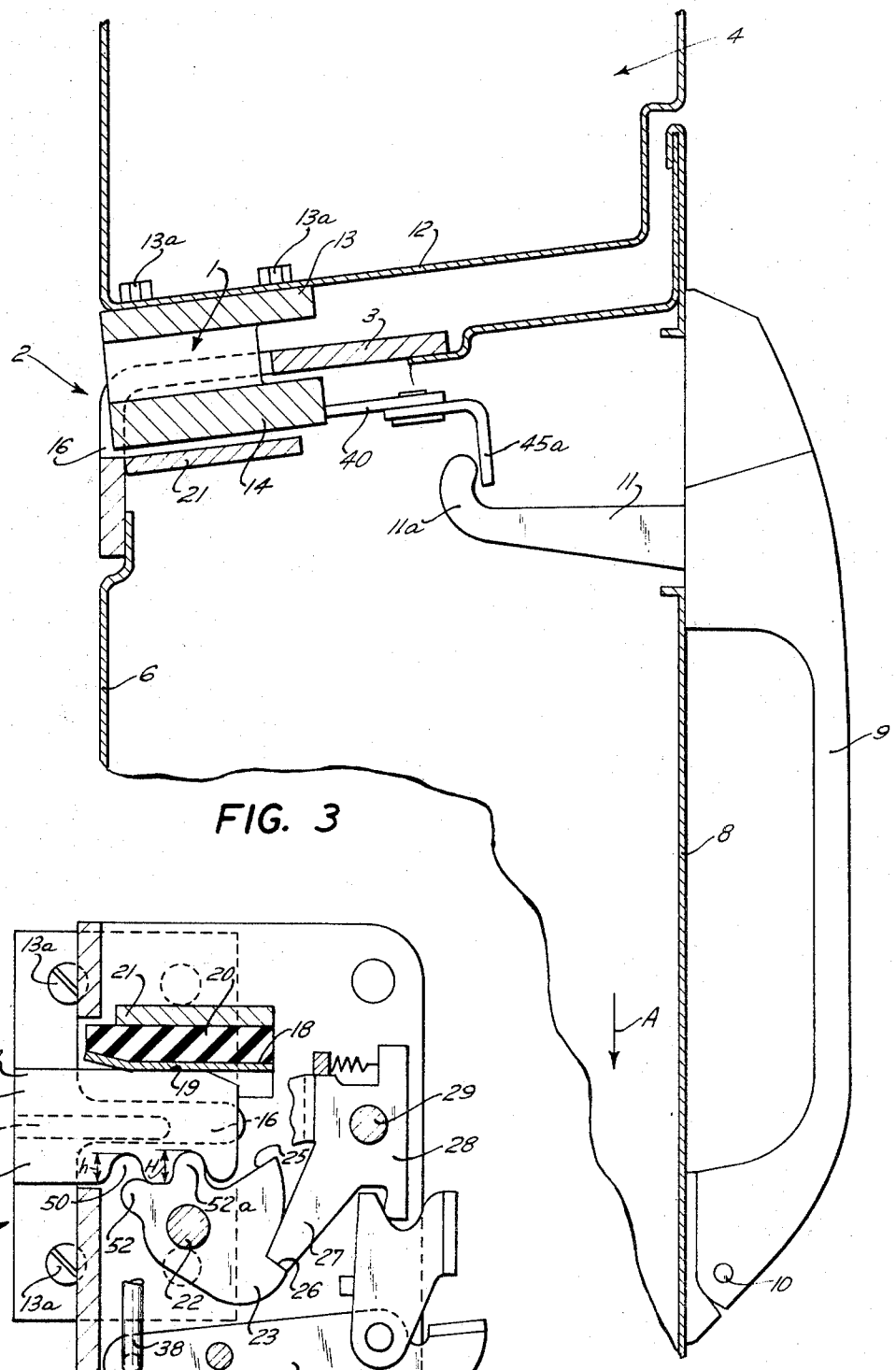

FIG. 3

FIG. 4

INVENTOR
MAX LAMPE
BY Karl F. Ross
ATTORNEY

FIG. 7

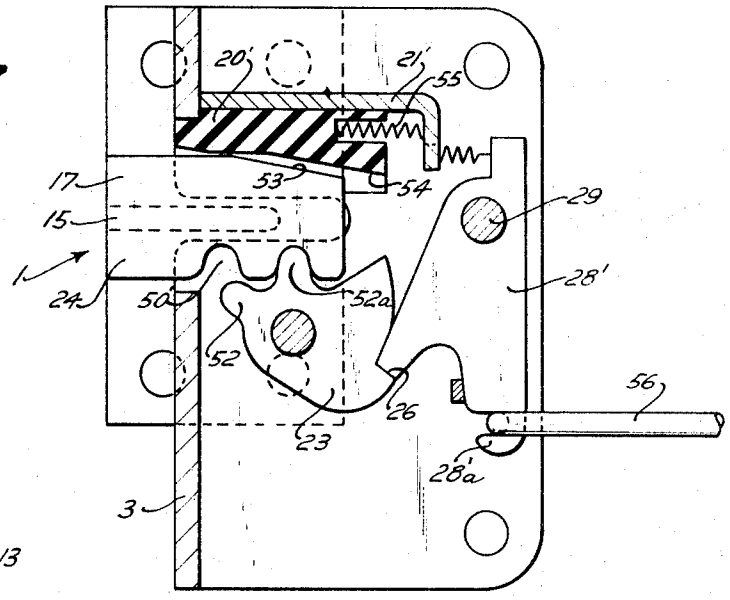

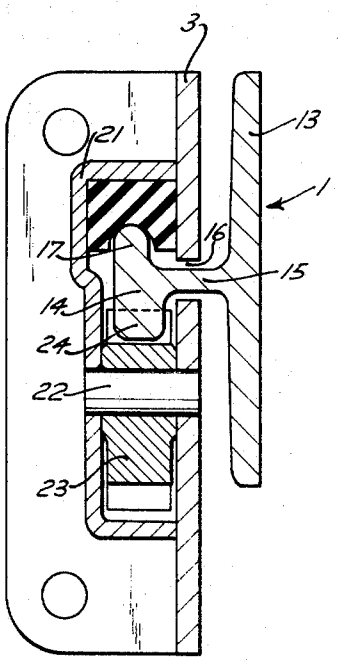

FIG. 6

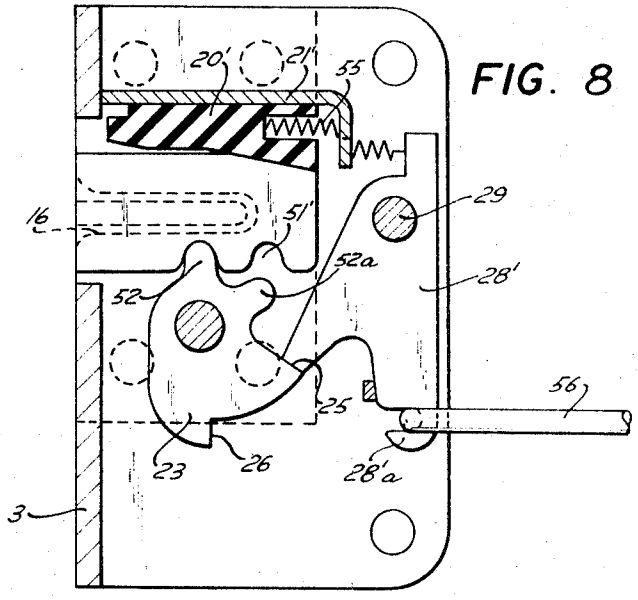

FIG. 8

INVENTOR
MAX LAMPE

BY Karl F. Ross
ATTORNEY

VEHICLE DOOR LATCH

My invention relates to a vehicle door latch and, more particularly, to a safety latch for passenger-carrying vehicles.

There are two principal problems with prior automotive vehicle door latches. One is that with a conventional car door considerable play eventually develops between the door and its frame or doorpost. Such play is inevitable in door latches which comprise a rack mounted on the doorpost that mates with a pinion mounted on the edge of the door with appropriate mechanism to control rotation of the pinion to lock and unlock the door, and a substantially conical pin on either the door or post mating with a similarly shaped conical hole on the facing post or door to prevent relative movement of the door and door post.

Another problem with conventional latch-operating mechanisms is that in case of some accident wherein the outside of the door is struck the latch is sprung and the door swings open. Two main factors account for this. One factor is that the interengaging bodies forming the lock, for instance the above-mentioned pinion and rack, are often not capable of withstanding stresses in more than one direction, namely, the direction in which they engage on closing the door. The other factor is that the latch-operating mechanism itself usually is positively linked to the door handle that an inward push is required to actuate it or can actuate it unintentionally. This inward push is often directly from a door button, or is translated from a pull on the door handle by a lever arrangement. If the door is struck from the outside and bent in, such latches are usually operated to make the door spring open.

It is the principal object of my present invention to provide an improved door latch system for vehicles.

A more specific object is to provide such a door latch which particularly overcomes the above-mentioned disadvantages.

Another object of my invention is to provide a vehicle door latch which is extremely snug and not likely to become loose, and which is not likely to spring open should the door be struck from the outside.

The above objects are attained, in accordance with a feature of my invention, by providing a door latch having a bolt that extends on a web like a T-section from the door post and is completely received in the latch. This bolt is clamped by a pivotal locking plate and wedged thereby against a stiffly resilient body. What is more, the T-head of the bolt, which actually constitutes the sole portion of the bolt received in the lock, is effectively surrounded on all sides but one by the lock. This one open side is blocked by the engagement of the cam-ratchet locking plate with the bolt.

According to another feature of my invention the operating mechanism for the door lock includes a nonpositive coupling constituted in part by a hooked member engaging behind another member. This hook is attached directly to the vehicle door handle and can only transmit motion to the lock when the handle is pulled so that, should the door and handle be bent in, the lock will not be operated and the door will not spring open.

In accordance with a further feature of my invention wedge means is provided to clamp or grip the bolt between the locking member or cam-ratchet of the latch and a resilient abutment member. In one embodiment the cam-ratchet is formed with teeth and the bolt with corresponding notches. Here, due to some notches being shallower than others, the bolt is cammed up into firm engagement with the abutment member. In another embodiment the abutment member is substantially wedge-shaped and biased into wedging engagement with a beveled edge of the bolt by a spring.

As a result of these features of my invention, the door latch I provide is not easily opened during an accident nor is it likely to develop play which would either allow it to open by itself or rattle undesirably.

The above and other objects, features and advantages of my present invention will be more fully described in the following, with reference to the drawing, in which:

FIG. 1 is a side view of a latch system according to my invention;

FIGS. 2 and 3 are sections according to lines II–II and III–III, respectively, of FIG. 1;

FIGS. 4 and 5 are views similar to FIG. 1, with some parts removed for clarity, showing progressive engagement of the bolt in the lock; and

FIGS. 6, 7 and 8 are views similar to those of FIGS. 2, 4 and 5, respectively, showing a second embodiment of a latch system according to my invention.

My latch system consists basically, as shown in FIGS. 1, 2 and 3, of a bolt 1 mounted on an edge 12 of a doorpost 4 and a lock 2 mounted on an edge 5 of a door 7 having an inside 6 and an outside 8.

A handle 9 is mounted on the outside 8 of the door 7 and is pivoted at 10 for movement in the direction of arrow B, away from the door 7. The handle 10 has an arm 11 formed with a hook end 11*a*. Arrow A indicates vehicle direction of travel.

The bolt 1 consists more specifically of a mounting plate 13 held by bolts 13*a* to the doorpost edge 12, a notched locking bar 14, and a web 15 joining the bar 14 and the plate 13. The plate 13, web 15 and bar 14 are all unitary, of one piece. A plate 3 mounting much of the lock operating mechanism is itself fixed on the door edge 5 and is formed with a slot 16 receiving the web 15. The bar 14 has an upper edge 17 of semicylindrical formation and a lower profiled edge 24.

A stiff but resiliently compressible rubber shock absorber 20, braced against a plate 21 enclosing part of the lock and fixed to the plate 3, is bonded to a metallic sheet 18 forming a semicylindrical seat 19 for the upper edge 17. This seat 19 is of slightly greater diameter than the side or edge 17 but is generally complementary thereto.

A rotatable cam-ratchet 23 pivotal around a pin 22 fixed in the plates 3 and 21 is engageable with an under edge 24 of the bar 14 in notches 50 and 51 (see FIGS. 4 and 5) by means of respective teeth 52 and 52*a*. This cam-ratchet 23 is further formed with detents 25 and 26 engageable by a locking arm 27 of a pawl 28 pivoted at 29. A spring 31 braced against a tab 30 on the plate 3 biases the arm 27 against the cam-ratchet 23. The pawl 28 further has an arm 32 engaged by one arm 33 of a two-arm lever 33, 34. The other arm 34 of this lever 33, 34 is linked to an inside door handle 58.

A lever 40 pivoted on a pin 39 fixed in the plate 3 mounts a pin 48 on which a lever 45 with a bent over tab 45*a* in turn pivots. The hook end 11*a* of the arm 11 overreaches this tab 45*a* and can engage it. The lever 45 further is formed with a projection 46 that can engage with a similar projection 47 on the pawl 28. The abutment 49 on the plate 3 limits pivoting of this lever 45 toward the inside.

A rod 38 connected to the opposite end of the lever 40 as the pin 48 is connected to one end of a further lever 35 pivoted at 36 (FIG. 2). The other end of this lever 35 is connected to a rod 37 on which a conventional lock-button cap 37*a* is screwed.

The extreme right-hand end of the lever 40 has a bent-over portion 41 engageable by a fork 42 of a cylinder lock 43 adapted to be turned by a key 44.

As shown in FIG. 4, when the door 7 is closed the extreme end of the bar 14 strikes the detent 25 of the cam-ratchet 23 and rotates it so that the tooth 52*a* engages in the notch 51. At the same time the arm 27 catches against the detent 26 and completely prevents counterclockwise rotation of the cam-ratchet 23. Here the door is partially closed.

FIG. 5 shows how a further push of the door 7 causes the bolt 14 to engage fully in the lock 2, with the tooth 52 engaged in the notch 50. It is here of importance that the height *h* of the notch 50 is less than the height H of the notch 51. In this manner, since the crests of the teeth 52 and 52*a* are at equal radial distances from the pin 22, the bar 14 is cammed slightly upwardly against the abutment formed by the resilient body 20 and its metal cover 19 and clamped thereagainst. This holds the bolt very securely. Also, a straight line perpendicular to the body 20 is formed by the tooth 52, notch 50 and pivot pin 22.

To open the door the outer handle **9** is pulled which brings the hook nose **11***a* of the arm **11** into contact with the tab **45***a* of the lever **45** which in turn pulls back the pawl **28** by means of the projection **46**. This frees the cam-ratchet **23** for rotation allowing the door **7** to be pulled open. This coupling depends totally on pulling force, no push on the handle **9** or other part of the linkage will result in a freeing of the cam-ratchet **23**.

Actuation of the inner door handle **58** pulls the arm **33** down on the arm **32** of the pawl **28**. This once again opens the door.

To lock the door either the button **37***a* is lifted or the key turned. Both of these actions move the lever **40** down into the position shown by dot-dash lines in FIG. **5**, where the hook **11***a* of the outer door handle **9** cannot contact the tab **45***a* to open the door.

When locked from the inside or outside the door cannot be opened from the outside, but always opened from the inside. And once the lock is set from the inside, the door can be shut without tripping it and unlocking it.

FIGS. **6—8** show a further embodiment of the lock system according to my invention. Here all similar parts have the same reference numerals as in the preceding Figures, with the primary difference as described below.

The notches **50'** and **51'** are of like depth so that the cam-ratchet **23** does not cam the bar **14** up. Instead a stiffly resilient body **20'** of hard rubber and generally wedge shaped is displaceable along a plate **21'** mounted on the lock plate **3**. A spring **55** urges this rubber body **20'** into the FIG. **7** illustrated position.

As the bar **14** is moved into the lock as shown in FIGS. **7** and **8**, an inclined edge **53** on the bar **14** smoothly engages a similar surface on the body **20'** and forces this latter back against the spring **55**. Due to the spring characteristic, the bar **14** becomes tightly wedged when in its FIG. **8** locked position. This helps to hold the door very firmly.

In addition, here a locking pawl **28'** is provided with a hook end **28***a'* engaged by a hook-ended rod **56** connected to a door handle not shown.

It is also possible to form the teeth **52***a'* and **52'** and the notches **50'** and **51'** as in FIGS. **1—6** for added clamping effect. Furthermore, the notches can be made of equal depth and the teeth of increasing height to attain this clamping.

The improvement described and illustrated is believed to admit of many modifications within the ability of persons skilled in the art, all such modifications being considered within the spirit and scope of the invention except as limited by the appended claims.

I claim:

1. A latch system for a vehicle door engageable with a doorpost and having an outer side and an inner side with respect to the vehicle, said system comprising:

a bolt on said doorpost formed with at least one notch;

lock means on said door engaging said bolt in a closed position of said door, said lock means including:

a rotatable lock member having at least one tooth receivable in said notch, and

a pivotal element having an outwardly movable arm releasably engageable with said lock member for preventing rotation of same and for lockingly holding said bolt;

an outwardly shiftable handle having an outwardly shiftable hook; and

mechanism coupling said hook with said element to swing said arm outwardly upon entrainment of said mechanism by said hook, said hook being constructed and arranged to disengage from said mechanism upon excessive inward movement of said handle and upon inward crushing of said outer side.

2. The latch system defined in claim **1** wherein said lock means includes an abutment member, said abutment and lock members flanking said bolt in a closed position of said door, said system further comprising means on said door for transversely clamping said bolt between said members.

3. The system defined in claim **1** wherein said handle is elongated and has an end formed with an arm extending transverse to said handle and a pivoted end, said arm being formed with said hook, said mechanism including a pivotal member engageable by said hook means.

4. The system defined in claim **2** wherein said bolt is of generally T-shaped cross section and includes a bar engageable between said members and a narrow web interconnecting said bar and said doorpost, said lock means being formed with a slot substantially parallel to said abutment member, said web fitting in said slot in said closed position of said door.

5. The system defined in claim **2** wherein said abutment is a substantially wedge-shaped resilient body displaceable longitudinally with respect to said bolt, said bolt being formed with a beveled flank facing said abutment and wedgingly engageable therewith, said means for clamping said bolt further including a spring urging said body into engagement with said beveled flank.

6. The system defined in claim **2** wherein said abutment member is formed as a resilient body abutting a longitudinal side of said bolt in said closed position of said door, said tooth urging said opposite side against said body upper engagement in said notch.

7. The system defined in claim **6** wherein said side is substantially semicylindrical, said body being formed with a complementary substantially semicylindrical seat receiving said edge.

8. The system defined in claim **6** wherein said bolt is formed with two such notches and said locking member with two such teeth, one of said teeth being engageable in one of said notches in a partially closed position of said door and the other of said teeth being engageable in the other of said notches in a fully closed position of said door, said other of said notches being shallower than said one of said notches.

9. The system defined in claim **8**, further comprising means pivotally supporting said locking member for angular displacement about an axis, said axis and said other of said notches and said other of said teeth lying along a common line substantially perpendicular to the surface of said body engaging said bolt in said fully closed position.

10. A latch system for a vehicle door engageable with a doorpost and having an outer side and an inner side with respect to the vehicle, said system comprising:

an elongated bolt on the doorpost formed with two lateral notches, the outermost notch being shallower than the innermost notch;

lock means on said door engaging said bolt in a closed position of said door, said means including:

a rotatable lock member having a pair of angularly spaced teeth successively engageable in said notches and a pair of angularly spaced abutments,

a pivotal detent element having an outwardly movable arm releasably engageable with said abutments on said member for preventing rotation of said member and for lockingly holding said bolt, and

a lever pivotal about a pivot axis and having two arms, one of the arms of said lever engaging behind said arm of said detent element;

an outwardly shiftable handle provided with an outwardly shiftable hook engaging behind the other arm of said lever, whereby outward shifting of said handle pivots said lever outwardly to entrain said detent element outwardly and free said rotatable lock member; and

means for displacing said pivot axis and said lever to pull said arms of said lever out of engagement with said pivotal detent element and said hook.

11. A latch system for a vehicle door engageable with a door post and having an outer side and an inner side with respect to the vehicle said system comprising: lock means on said door; bolt means on said door post lockingly receivable in said lock means; an outwardly shiftable handle on the outer side of said door; operating means shiftable toward said outer side only linked to said lock means for freeing said bolt means for move-

ment out of said lock means; and a coupling having hook means interconnecting said handle and said operating means for actuating the latter only upon outward shifting of the handle, said handle being elongated and having an end formed with an arm extending transversely to the handle and a pivoted end secured to said door, said arm being formed with said hook means and said operating means including a pivotal member engageable by said hook means.

12. A latch system for a vehicle door engageable with a door post, said system comprising:

an elongated bolt on said door post, lock means on said door releasably engaging said bolt and preventing mutual displacement between said bolt and said lock means, said lock means including an angularly displaceable lock member and an abutment member, said members flanking said bolt in a closed position of said door;

means on said door for transversely clamping said bolt between said members;

an outwardly shiftable handle mounted on the outer side of said door with respect to the vehicle;

operating means linked to said lock means for freeing said bolt for movement out from between said members; and

a coupling having hook means interconnecting said operating means with said handle to actuate said operating means only on outward shifting of said handle with respect to said vehicle.