D. D. S. WHYTOCK.

DRUM DRYING MECHANISM FOR LACE AND INSERTION.

APPLICATION FILED DEC. 15, 1911.

1,068,551.

Patented July 29, 1913.

2 SHEETS—SHEET 1.

FIG. 1.

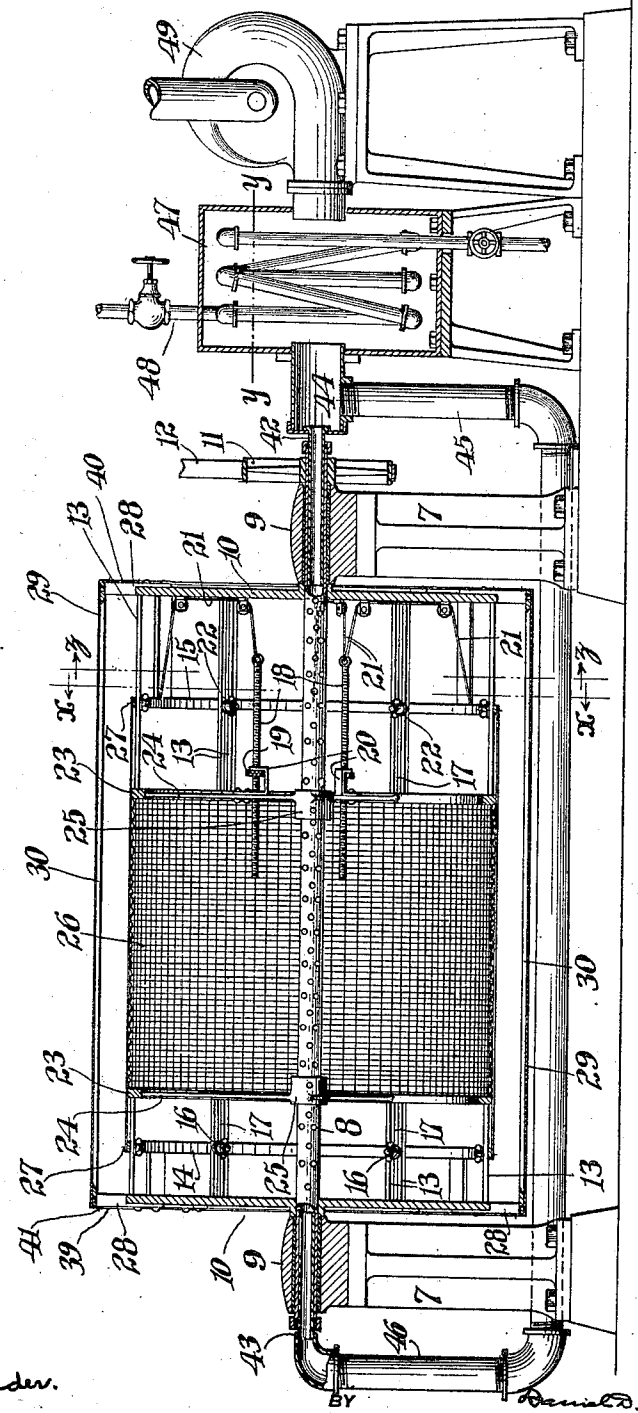

WITNESSES

Gertrude Bader.

William Mowrey.

INVENTOR

Daniel D. S. Whytock

BY

Wm. Steell Graham.

ATTORNEY

COLUMBIA PLANOGRAPH CO., WASHINGTON, D. C.

D. D. S. WHYTOCK.

DRUM DRYING MECHANISM FOR LACE AND INSERTION.

APPLICATION FILED DEC. 15, 1911.

1,068,551.

Patented July 29, 1913.

2 SHEETS—SHEET 2.

FIG. 2.

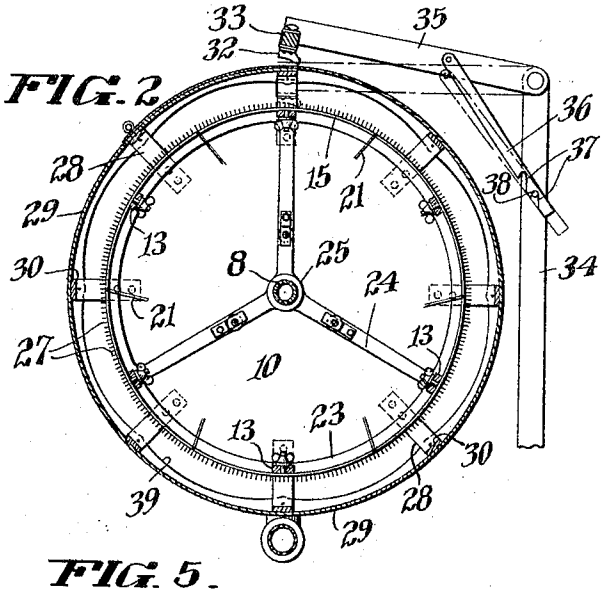

FIG. 3.

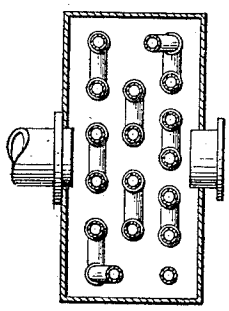

FIG. 4.

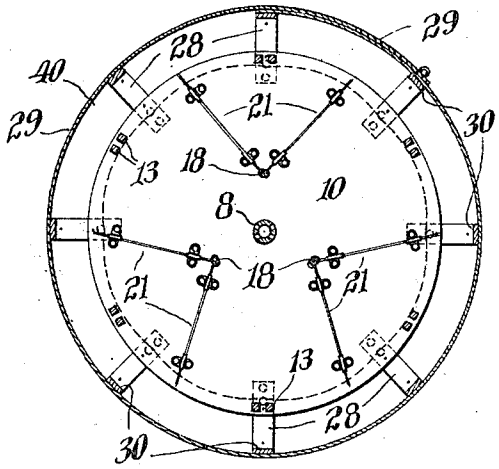

FIG. 5.

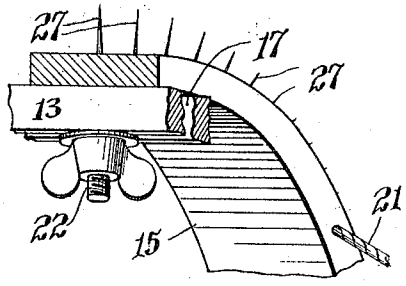

FIG. 6.

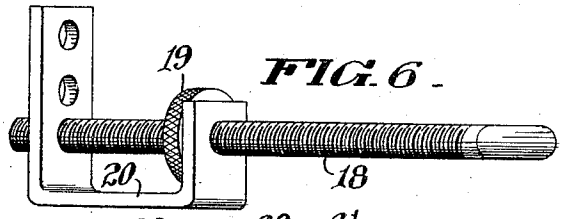

FIG. 7.

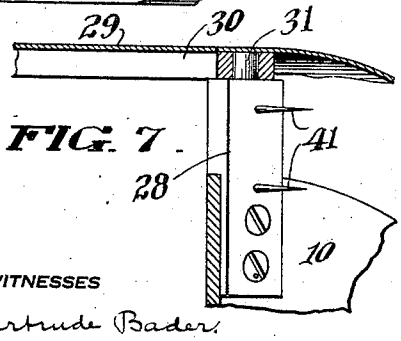

FIG. 8.

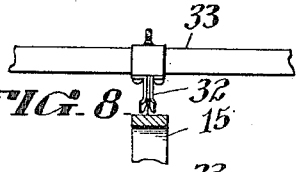

FIG. 9.

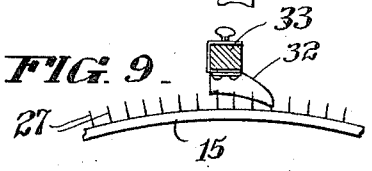

WITNESSES

Gertrude Bader.

William Conway.

INVENTOR

Daniel D. S. Whytock

BY

Wm. Steell Jackson

ATTORNEY

COLUMBIA PLANOGRAPH CO., WASHINGTON, D. C.

UNITED STATES PATENT OFFICE.

DANIEL D. S. WHYTOCK, OF BETHLEHEM, PENNSYLVANIA.

DRUM DRYING MECHANISM FOR LACE AND INSERTION.

1,068,551. Specification of Letters Patent. Patented July 29, 1913.

Application filed December 15, 1911. Serial No. 665,910.

To all whom it may concern:

Be it known that I, DANIEL D. S. WHYTOCK, a citizen of the United States, and a resident of Bethlehem, Pennsylvania, have invented a certain new and useful Drum Drying Mechanism for Lace and Insertion, of which the following is a specification.

The purpose of my invention is to provide for drum support of lace or insertion during its drying, preferably with provision for stretching it laterally and for draft through and over it, as may be desired.

A further purpose of my invention is to insert a drying blast within the interior of a drum drying mechanism for lace and insertion and to withdraw it from the end, preferably near the circumference.

A further purpose of my invention is to supply a drum lace- and insertion-drier with a blast and with a removable blast-inclosing cover.

A further purpose of my invention is to provide for automatic placing of lace or insertion upon the surface of a drum.

A further purpose of my invention is to provide uniform tension devices for the lateral stretching of lace upon a drying drum.

A further purpose of my invention is to make a drying drum for lace and insertion adjustable to fit different widths of material and to secure lateral stretching of the fabric.

A further purpose of my invention is to support lace or insertion radially at the approximate center of a drum drying mechanism and to secure its sides to drum rings, both of which are preferably adjustable and one of which, at least, is provided with a fine adjustment for stretching the lace or insertion laterally.

A further purpose of my invention is to secure both fine and coarse adjustments for the rings of a lace and insertion drying drum and, preferably, to supply a removable blast-inclosing cover about the same.

Further purposes will appear from the specification and the claims appended thereto.

I have preferred to illustrate my invention by that form thereof which has proved most successful in practice and which is inexpensive, efficient and readily constructed from materials easily obtained.

Figure 1 is a central longitudinal section of one form of my invention. Fig. 2 is a section taken upon line *x—x* of Fig. 1, with additional matter. Fig. 3 is a section taken upon line *y—y* of Fig. 1. Fig. 4 is a section taken upon line *z—z* of Fig. 1. Fig. 5 is a perspective, partly in section, of one of the drum heads of Fig. 1. Fig. 6 is a perspective of a bracket and eye bolt shown in Fig. 1. Fig. 7 is a detail of part of the structure of Fig. 1. Figs. 8 and 9 are sections at right angles to each other, of placing mechanism for the lace or insertion.

Similar numerals of reference indicate like parts in the drawings.

The pillow block 7, 7 support the hollow shaft 8 in bearings 9, 9 permitting rotation of the drum heads 10, 10. These are mounted upon the shaft and are rotated continuously, or at intervals, as desired, by means of any suitable mechanism, here shown as pulley 11 and belt 12. The drum is capable of being turned by hand, when desired.

The heads 10, 10 are preferably fixed in relation to each other and carry guide rods 13 near their circumference, upon which guide rods the adjustable rings 14, 15 are supported. The rods are, preferably, arranged in pairs. The rings permit, preferably, both coarse and fine adjustment. In the form shown, the ring 14 is intended to take the first, coarse, adjustment, being set in any desired longitudinal position and secured therein by thumb bolts 16 passing through the slots or spaces 17. Other means of fastening any suitable rings will readily suggest themselves. The first ring set gives, as nearly as its range of movement will permit, the desired spacing from the other ring, as 15, in order to accommodate the width of lace or insertion which is to be treated. The second ring is also, preferably, capable of adjustment to space the rings by approximately the width of the lace, where this cannot be approximated by the range of adjustment of the first ring, as 14. The adjustment shown for the second ring is also one of many permissible forms, and is by means of bolts 18, nuts 19 and brackets 20 through cords 21. I prefer to use some positive lateral ring adjustment to stretch the lace after it is mounted upon the drum. At whatever position the ring 15 is ultimately placed it also can be securely fastened by means of thumb nuts 22 operating within the slot 17 formed by or within bars 13.

There are preferably two cords 21 from each bolt and these are most desirably run in opposite directions to increase the angular area of the drum controlled by each bolt,

reducing the number of devices and making it easier to move the ring or other suitable member uniformly. Obviously, this adjusting mechanism is illustrative only, as various other mechanisms for accomplishing the same result may be used.

In order to support the central part of the lace or insertion reliably without excessive lateral strain upon it, I provide supporting disks 23, which are preferably spoked at 24 and mounted upon the shaft 8 by means of hub 25. The disks or rings 23 carry a screen 26 of any suitable non-oxidizable material which permits the drying air to pass through at the same time that the fabric to be dried is supported by it. It is the intention to support the lace at the approximate center of the drum by means of the wire netting 26 in order to facilitate the mounting of the material to be dried and to reduce the stretching strain necessary to properly hold it in extended position. Obviously this supporting drum portion may be of any desired extent, shorter than the lowest width intended to be stretched upon that drum. The spider upon which the wire netting 26, or its equivalent is supported is merely a convenient form for this construction and forms a support for the bracket 20, within which adjustment of the rod 18 is made.

The rings 14 and 15 are provided with pins 27 at suitable intervals about their circumferences to engage with the insertion and permit it to be properly stretched when the rings 14 and 15 are separated.

I prefer to introduce hot air within the drum through tube 8. In order to confine the heat somewhat within and upon the drum, I provide a casing supported from ends 10 by strips 28 and comprising a cover 29, preferably of canvas, and means for securing it in place, as by strips 30, attached to the cover, which engage with pins 31 forming the terminals of the strips or arms 28. The cover 29 may be stretched and fixed in position readily, with the form of attachment illustrated. In order to close it reliably the cover is preferably overlapped, as best seen in Fig. 4, by the distance between two strips 29 so that a complete closure may be effected. For this purpose two sets of the pins 31 are extended to pass through the under part of the cover where it is overlapped and to enter the outer part. The drum is rotated slowly while the cover is being applied or removed.

In order to provide for quickly and accurately placing the lace or insertion upon the drum and insuring its engagement with the pins in the end rings, I may provide cam guides 32 above and about these pins, supported in any suitable manner, as by a strip 33, shown in Fig. 2. The strip, guides and supporting mechanism for this seating structure constitute a departure in this figure from a true section of Fig. 1 and are shown in Fig. 2 alone. I illustrate a suitable support 34, arm 35, pivoted thereto, and latch 36 provided with a plurality of notches 37 at any suitable points to engage with the pin 38, so that the bar 33 may be dropped or raised as desired. Its weight is sufficient to cause the seating of the lace or insertion upon the pins without excessive friction therefrom.

The cover 29 is preferably continuous in its cylindrical surface but open at one end for exhaust of the drying fluid used. I have therefore illustrated it as open at the end 39 and as closed at 40 over the pins 41.

I prefer to use hot air for the drying function and to admit it at the center of both ends of the drum by means of inlets 41 and 42, supplying the air to them through pipes 44, 45, 46 from a heater 47, which I have shown as heated by steam through pipes 48. The blast is created in any desired manner as by blower 49.

It will be evident that drum-mounting of the lace or insertion saves a great deal of space in the drying of these and also protects from the injury by soiling or otherwise, during the drying which is inevitable where there is so much exposure. The reduced area or surface which is exterior in the drum forms but a small part of the total surface otherwise exposed and is protected by the cover 29. The outward flow of drying fluid prevents ingress of dust, etc., to the drum. It will be evident that the lace-engaging rings may be set at any desired points to roughly approximate the width of the lace and that, after the lace has been placed upon them, they may be separated to stretch the lace laterally, so as to dry it to the best advantage. It will be further evident that the intermediate reticulated metal or equivalent support of the lace or insertion avoids the necessity for excessive stretching while it permits sufficiently free access of drying fluid to and through the lace. It will be further evident that any temperature and volume of drying fluid may be obtained which is desired and that it may be adjusted to the needs of the product being dried. It will be further evident that the structure may be varied greatly to obtain the benefits secured by my invention without departing from the spirit of the claims herein.

Having thus described my invention, what I claim as new and desire to secure by Letters Patent is:—

1. In a device of the character stated, a lace supporting drum, means for supplying drying fluid to the interior of the drum, adjustable edge-engaging means for stretching the lace axially upon the drum, and a cover surrounding the drum circumferentially, open to permit escape of drying fluid.

2. In a device of the character stated, a lace drying drum provided with fluid heating means, pipes conducting the heated fluid to the interior of the drum from both ends thereof, and a circumferentially extending substantially imperforate cover for the drum spaced therefrom.

3. In a device of the character stated, a lace carrying drum, means for discharging drying fluid within the drum and a cover for the drum spaced radially from the position of the lace on the drum, an end between the cover and the drum being open to permit discharge of drying fluid therefrom.

4. In a device of the character stated, a lace carrying drum, pins for engaging the lace and cam guides forcing the lace down upon the pins with rotation of the drum.

5. In a device of the character stated, a lace carrying drum, devices for engaging the lace thereon and automatic means for setting the lace upon the engaging devices.

6. In a device of the character stated, a face supporting drum having its central section of reticulated character and means for securing the lace upon the central section, in combination with means for discharging drying fluid within this section and a cover spaced radially from the drum and adapted to retard the escape of drying fluid from the space between the drum and cover, an end between the drum and cover being open to permit fluid discharge there between the drum and cover.

7. In a device of the character stated, a lace supporting drum having its central section of open character, a casing in the form of a cylinder and cylindrically substantially imperforate about the drum and means for discharging drying fluid within the drum.

8. In a device of the character stated, an open lace supporting drum, closed drum heads and a cylindrical casing surrounding the drum and spaced from one of the drum heads to permit air outlet thereabout.

9. In a device of the character stated, a lace-carrying drum, means for discharging drying fluid within the drum and a cover for the drum of reticulated material adapted to restrict the escape of drying fluid which has passed through the lace carried by the drum.

DANIEL D. S. WHYTOCK.

Witnesses:
WILLIAM A. BECKER,
MINNIE B. WHYTOCK.

Copies of this patent may be obtained for five cents each, by addressing the "Commissioner of Patents, Washington, D. C."