July 7, 1936. M. B. WOOD 2,046,669

ELECTRIC FUSE AND ASSEMBLING APPARATUS AND METHOD THEREFOR

Filed Feb. 20, 1932 2 Sheets-Sheet 1

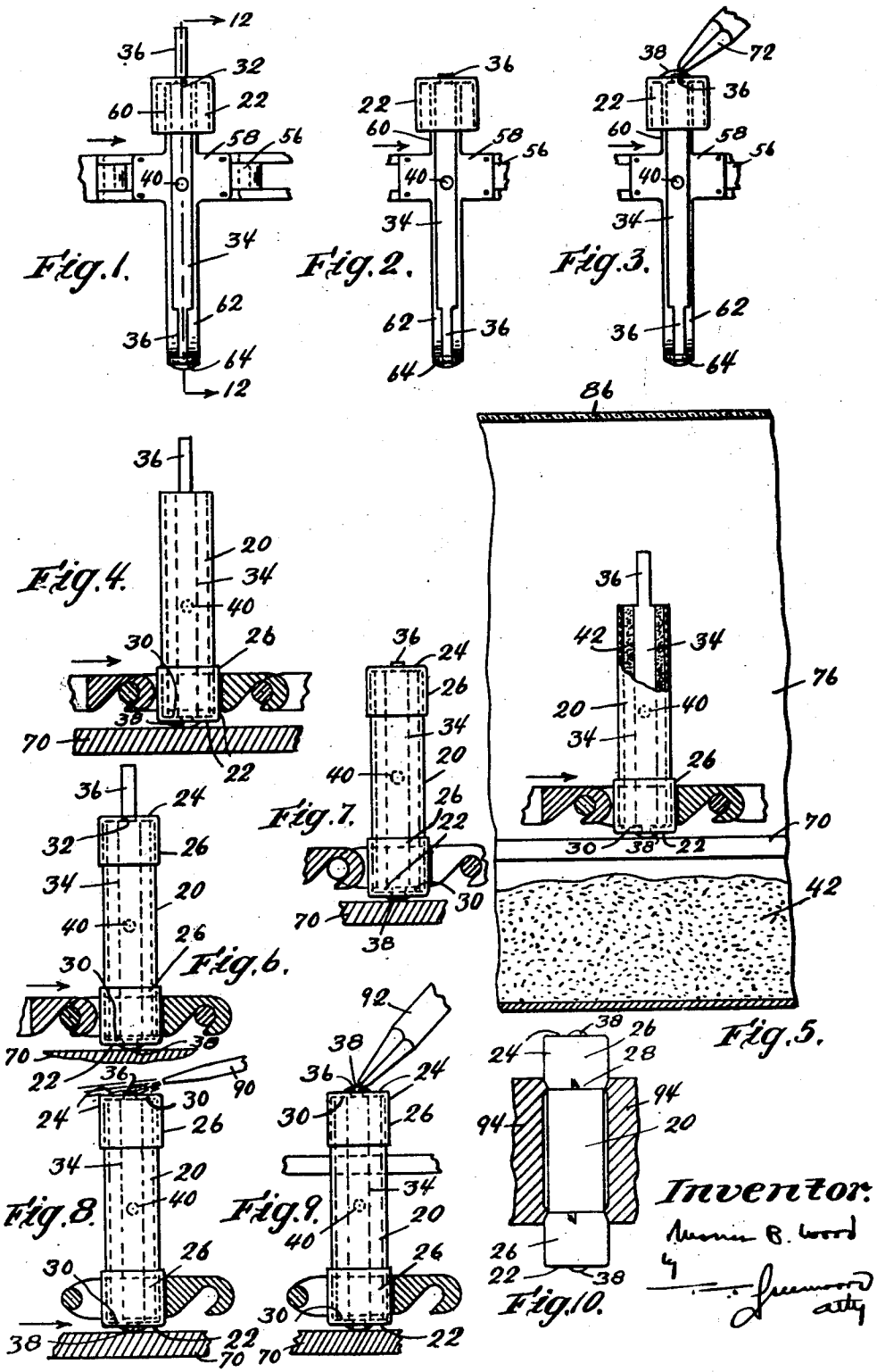

Inventor:
Morris B. Wood
by
[illegible]
atty

July 7, 1936. M. B. WOOD 2,046,669

ELECTRIC FUSE AND ASSEMBLING APPARATUS AND METHOD THEREFOR

Filed Feb. 20, 1932 2 Sheets-Sheet 2

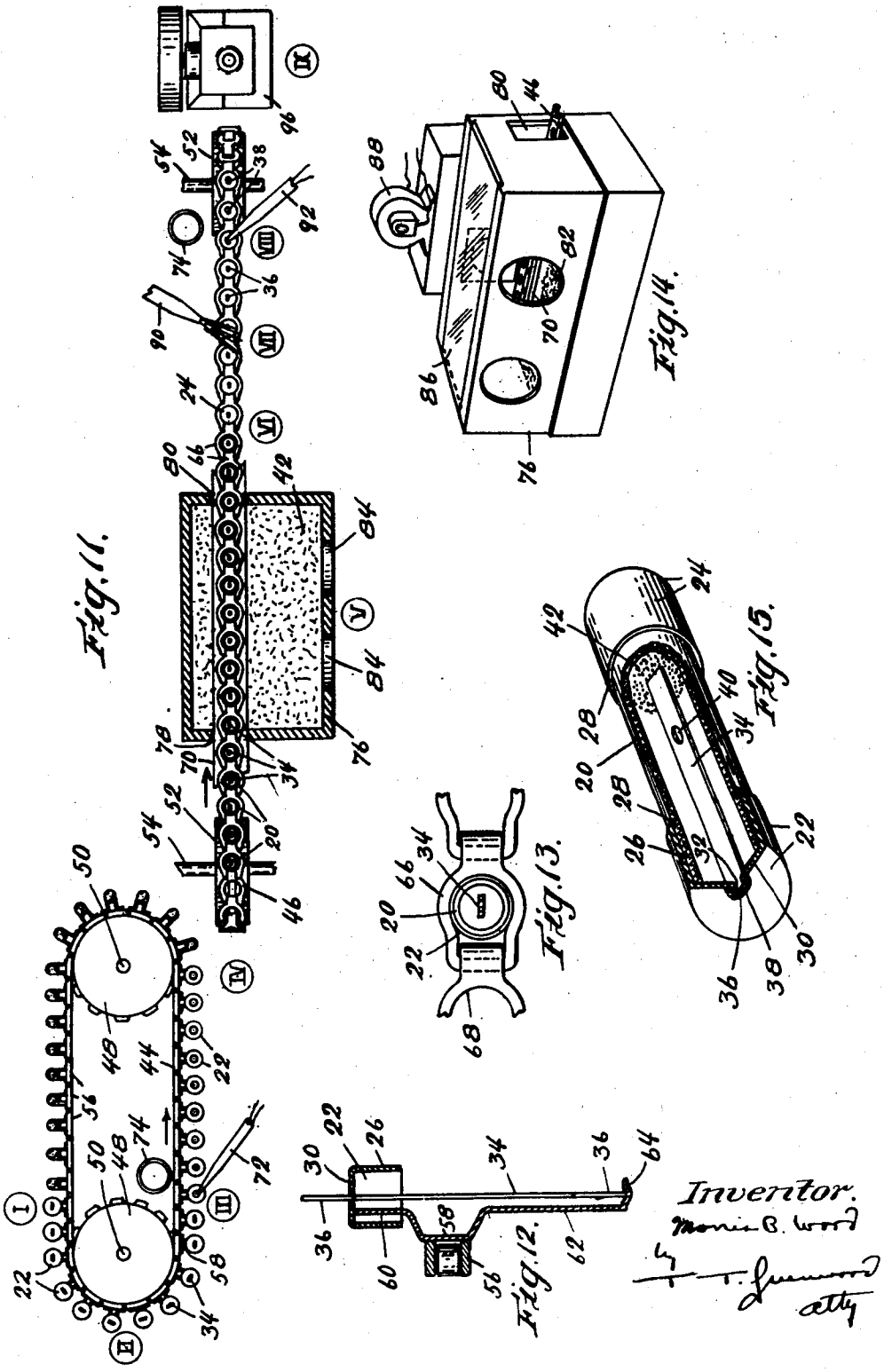

Patented July 7, 1936 2,046,669

UNITED STATES PATENT OFFICE

2,046,669

ELECTRIC FUSE AND ASSEMBLING APPARATUS AND METHOD THEREFOR

Morris B. Wood, Newburyport, Mass., assignor to The Chase-Shawmut Company, Newburyport, Mass., a corporation of Massachusetts

Application February 20, 1932, Serial No. 594,201

26 Claims. (Cl. 200—113)

This invention relates to the manufacture of cartridge-type electric fuses and particularly to a non-refillable fuse of the ferrule type comprising a tubular enclosing casing, end caps fixed on the ends of the casing, a fusible link extended through the casing and soldered to the end caps, and a loose filler of arc-suppressing material in the casing around the fusible link.

The main object of the invention is a process, and an apparatus for carrying out the process, wherein the fuses of the type above described can be rapidly assembled as a series of progressive steps at a rate of speed that can be set by an overseer, and wherein a large output of assembled fuses can be obtained for a small factory space.

The process utilizes one or more carriers upon which the fuse is built, the carriers passing through successive operating stations at most of which operatives are stationed, each of whom repeats the same operation upon successive fuse-elements, so that the fuse is assembled in a progressive manner on the carriers at a speed determined by the speed of the carriers.

Briefly, the process comprises supporting a fusible link vertically on a moving carrier with an end cap over the upper end thereof and passing the link and end cap successively through a plurality of stations where the projecting end of the link is snipped off, the end of the link is soldered to the end cap, the enclosing casing is placed in the end cap over the link, the casing is filled with arc-quenching material, the other end cap is placed on the casing over the other end of the link, the projecting end of the link is snipped off, the end face of the end cap is blown clear of arc-quenching material, the link and end cap are soldered together, and the end caps are crimped to the casing.

A further object of the invention is an apparatus for the progressive assembly of electric fuses.

Another object is an enclosed electric fuse especially adapted for progressive or line assembly.

A yet further object is generally to improve fuse manufacturing methods and apparatus.

Figs. 1, 2 and 3 are side elevations of the same link of a carrier chain illustrating the first three successive steps of the process, wherein, in Fig. 1, the chain-link supports the vertical fuse link and an end cap; in Fig. 2, the projecting end of the link has been removed; and in Fig. 3, the link is soldered to the end cap.

Figs. 4 through 10 inclusive, represent in sectional elevation the same link of a second carrier chain and illustrate further successive steps of the process wherein, in Fig. 4, the connected link and end cap of Fig. 3 are inverted and an enclosing casing has been inserted in the end cap; in Fig. 5, the end cap has been filled with arc-quenching material; in Fig. 6, the other end cap has been placed on the casing over the fuse link; in Fig. 7, the projecting end of the fuse link has been removed; in Fig. 8, the upper face of the end cap is cleaned by an air blast; in Fig. 9, the end cap and fuse link are soldered together, and in Fig. 10, the end caps are crimped onto the enclosing casing.

Fig. 11 is a plan view, more or less diagrammatic, of the conveyor system for carrying out the process.

Fig. 12 is a section of a conveyor link of the first conveyor chain taken along line 12—12 of Fig. 1.

Fig. 13 is a plan view of a link of the second conveyor chain with a partially assembled fuse as shown in Fig. 4, supported therein.

Fig. 14 is a perspective view of the box in which the enclosing casings of the fuses are filled with arc-quenching material.

Fig. 15 is a longitudinal view, partly in section, of a non-refillable cartridge fuse of the ferrule type with the manufacture of which this invention is particularly concerned.

The particular fuse herein illustrated which is a product of the present process includes, see Fig. 15, a tubular enclosing casing 20 of insulating material as fibre, having metal end caps 22 and 24 the cylindrical side walls 26 of which surround the ends of the casing and the free confronting ends 28 of which walls are crimped inwardly and are embedded in the material of the casing. The caps are provided with end walls 30 which overlie the ends of the enclosing casing and are provided with elongated, or rectangular, passages 32. A fusible link 34 of rectangular cross-section is located within the casing lengthwise thereof and has end-portions 36 of reduced cross-section, but one of which is shown in Fig. 15, which are also of rectangular cross-section and extend into the rectangular passages 32 of the end caps and are soldered to the end caps by solder 38. The length of the end portion 36, before it is soldered to the end cap preferably is greater than the length of the end cap, to facilitate its insertion in the slot in the end cap. The fuse link has a most readily fusible section in the middle thereof, as determined by the aperture 40 therethrough. The length of the fuse link between the reduced end portions thereof is adapted

to be approximately the some as the distance between the end walls of the end caps on the assembled fuse; and the shoulder at the junction between the end portion and body of the link is utilized in fixing the position of the link and the end cap, in the assembly thereof. The casing is filled with a loose-arc-quenching material 42 of any suitable nature, as powdered asbestos and the like. It will be understood that this specific fuse is not the only one that can be assembled by the present process.

The apparatus used in connection with the process is illustrated generally in plan in Fig. 11 and includes two endless conveyor chains 44 and 46. The chain 44 travels in a horizontal plane about sprockets 48 which are rotatable on vertical shafts 50. The chain 46 rotates in a vertical plane between sprockets 52 which are rotatable on horizontal shafts 54. The two chains are arranged with their passes close to each other so that work on the first chain can be transferred readily to the second chain.

The horizontal chain 44 comprises a plurality of connected links 56 each of which, or certain successive links of which, see especially Figs. 1, 2, 3 and 12, have on their outer faces vertical carriers 58 each having an upper section 60 adapted to enter within and support an end cap 22 and a lower section 62 terminated in a horizontal indented foot or stirrup 64 adapted to support a fuse link 34 vertically.

The horizontal chain 46 is composed of a series of links 66, see especially Fig. 13, each, or certain successive ones, of which have a generally circular passage 68 therethrough of such dimension as to receive an end cap of the fuse and to support it and a casing inserted in the end cap in upright position in the manner illustrated in Fig. 4. The upper pass of the chain travels over and in closely spaced parallel relation with a stationary plate 70 over which the end caps in the link of the chain are slid and by which they are retained in the chain.

In the performance of the process there are four operatives stationed along the first chain 44 at the stations indicated by the numerals I through IV inclusive. Operative number I places the end caps 22 upon the projections 60 of the chain carriers 58. The chain carries the end caps in front of operative II who inserts the ends 36 of the fuse links 34 in the slots 32 in the end caps so that the link and end cap assume the positions illustrated in Figs. 1 and 12, the shoulder at the junction of the body of the link and the end portion thereof determining the position of the end cap with respect to the link. Operative II also snips off the protruding ends of the fuse links above the end walls 30 of the end caps, as shown in Fig. 2, in some position of their passage between operatives II and III. Operative III applies solder 38 to the snipped ends of the fuse links and to the end caps as they pass by her, as shown in Fig. 3. The soldering is effected by an electrically heated soldering iron 72 that is hung on a support, not shown, that holds the tip of the iron about on a level with the top of the end caps, and permits the iron to be moved with little exertion on the part of the operative along the line of end caps and between the end caps and a pot 74 of soldering paste or acid.

The soldered end caps and links pass into the reach of operative IV who is seated at the junction of the two chains. This operative removes the successive soldered end caps and links from the first chain, inserts one end of an insulating tube 20 in the end cap, inverts the assembly and places it in the second chain 46, the end cap 22 being inserted in the passage 68 of a link 66 and resting on and sliding over the supporting plate 70, as shown in Fig. 4.

The upper or fuse carrying pass of chain 46 passes into a box 76 through an inlet slot 78 in one side wall thereof and out through an exit slot 80 in the opposite side wall, carrying the fuse-assemblies through the box. The box contains a supply of lose arc-quenching material 42 contained under the top pass of the chain. The front wall of the box is provided with arm holes 84 for operative V whose duty it is to scoop up the loose material in the box and pour it over the tops of the moving fuse casings on the chain, the material thereby entering the casing through the upper open ends thereof. An excess of material is poured over the casings so as to be sure to fill them. A rapping device, not shown, is employed to vibrate the fuse casings rapidly so as to cause the loose material to pack down therein and to ensure a complete filling of the casings. The top wall 86 of the box is transparent so that the operative can see what she is doing. The box preferably is placed under slightly less than atmospheric pressure by a suction blower 88 which has a discharge outlet remote from the apparatus so as to prevent escape of dust from the box.

The filled casings, as shown in Fig. 5, emerge from the filling box and pass before operative VI who places the other end caps 24 upon the filled casings and over the ends of the fuse links, as shown in Fig. 6, and also snips off the projecting ends of the links so that the successive fuses pass out of her position as shown in Fig. 7.

The fuses then pass successively through an air blast from a nozzle 90 located at station VII, and as shown more particularly in Fig. 8, which blast serves to remove from the top of the upper end cap and from the short projecting end of the fuse link any filling material that may be deposited thereon. The air-cleaned fuses thence pass to station VIII where an operative solders the fuse links and end caps 24 together, as illustrated in Fig. 9, by a soldering iron 92 arranged in a manner similar to the iron 72.

The heretofore separate elements of the fuse are now connected against detachment and are removed from the end of the chain by an operative located at station IX and inserted between the dies 94 of a press 96 where the confronting ends 28 of the end caps are crimped onto the casing, thereby completing the assembly of the fuses, which can be removed from the assembly line, labeled and packed for shipment.

By this line method of assembly, the production of fuses per unit operation is increased and, more particularly, the production of fuses for a given floor space is greatly increased.

I claim:

1. The process of assembling an electric fuse comprising a tubular enclosing casing, end caps on the ends of the casing, and a fusible link extended lengthwise of the casing and connected with the end caps, which process comprises connecting one end of the link to an end cap, inserting one end of the tubular casing in the end cap and over the link, placing the other end cap upon the other end of the casing and over the other end of the link, and connecting said last named end cap and said other end of said link.

2. The process of assembling an electric fuse comprising a tubular enclosing casing, end caps

fixed onto the opposite ends of the casing, and a fusible link extended lengthwise of the casing and having its ends connected with said end caps, which process comprises holding the aforesaid elements of the fuse in the aforesaid relation by connecting the link to the end caps, and subsequently securing the end caps directly upon the ends of the casing.

3. The process of assembling an electric fuse comprising a tubular enclosing casing, end caps fixed onto the opposite ends of the casing, and a fusible link extended lengthwise of the casing and having its ends connected with said end caps, which process comprises securing the parts loosely in the aforesaid relation by connecting the opposite ends of the link to the end caps, and thereafter securing the parts permanently in the aforesaid relation by fixing the end caps directly to the ends of the casing.

4. The process of assembling an electric fuse comprising a tubular enclosing casing, end caps fixed onto the opposite ends of the casing, and a fusible link extended lengthwise of the casing and having its ends connected with said end caps, which process comprises connecting the end caps on the casing by the fuse link and thereby securing the caps and casing against detachment, and thereafter crimping the end caps to the casing.

5. The process of assembling an electric fuse comprising a tubular enclosing casing, end caps fixed onto the opposite ends of the casing, and a fusible link extended lengthwise of the casing and having its ends connected with said end caps, which process comprises utilizing the fuse link to hold the elements of the fuse loosely in assembled position, and thereafter securing the end caps and casing together independently of the fuse link.

6. The process of assembling an electric fuse comprising a tubular enclosing casing, end caps fixed onto the opposite ends of the casing, a fusible link extended lengthwise of the casing and having its ends connected with said end caps, and an arc quenching filler in the casing around the link, which process comprises holding the elements of the fuse, including the filler, temporarily in the aforesaid relation by the fuse link which connects the end caps together, and subsequently securing the end caps onto the ends of the casing independently of the fuse link.

7. The process of assembling an electric fuse comprising a tubular enclosing casing, end caps fixed onto the opposite ends of the casing, a fusible link extended lengthwise of the casing and having its ends connected with said end caps, and an arc-quenching filler in the casing around the link, which process comprises connecting an end cap to one end of the link, inserting the casing into the end cap around the link, introducing the filler into the casing, applying the other end cap onto the other end of the casing, and connecting the other end of the link thereto.

8. The process of assembling an electric fuse comprising a tubular enclosing casing, end caps fixed into the opposite ends of the casing, a fusible link extended lengthwise of the casing and having its ends connected with said end caps, and an arc-quenching filler in the casing around the link, which process comprises connecting an end cap to one end of the link, inserting the casing into the end cap around the link, introducing the filler into the casing, applying the other end cap onto the other end of the casing, connecting the other end of the link thereto, and subsequently securing the end caps directly onto the ends of the casing.

9. The process of assembling an electric fuse comprising a tubular enclosing casing, end caps fixed onto the opposite ends of the casing, a fusible link extended lengthwise of the casing and having its ends connected with said end caps, and an arc-quenching filler in the casing around the link, which process comprises soldering an end cap to one end of the link, inserting one end of the casing loosely into the end cap and around the link, introducing the filler into the casing, applying the other end cap loosely upon the other end of the casing and over the other end of the link, soldering the link to said other end cap, and then crimping the end caps permanently upon the ends of the casing.

10. The method of assembling an electric fuse having a tubular enclosing casing, end caps on the end of the casing, and a fuse link which extends lengthwise of the casing and is connected with the end caps, which method comprises supporting an end cap with its open end down, inserting the upper end of a fuse link through an aperture in the end wall of the end cap and supporting the link and cap in such relation, connecting the end cap and link while supported in such relation, inverting the position of the end cap and link, inserting an end of the casing in the inverted cap, supporting the link, cap and casing in such relation, applying a second end cap over the other end of the link and the casing, and securing said second end cap and link together.

11. The method of assembling an electric fuse having a tubular enclosing casing, end caps on the end of the casing, and a fuse link which extends lengthwise of the casing and is connected with the end caps, which method comprises supporting an end cap with its open end down, inserting the upper end of a fuse link through an aperture in the end wall of the end cap and supporting the link and cap in such relation, connecting the end cap and link while supported in such relation, inverting the position of the end cap and link, inserting an end of the casing in the inverted cap, supporting the link, cap and casing in such relation, applying a second end cap over the other end of the link and the casing, securing said second end cap and link together, and thereafter securing the end caps and the casing directly together.

12. The method of assembling an electric fuse having a tubular enclosing casing, end caps on the ends of the casing, a fuse link which extends lengthwise of the casing and is connected with the end caps, and a loose arc-quenching filler in the casing about the link, which method comprises supporting an end cap with its open end down, inserting the upper end of the link upwardly through an opening in the end wall of the cap, soldering the link and cap together while they are supported in such relation, inverting the soldered cap and link and inserting the lower end of the casing in the inverted cap, supporting the cap and the casing vertically while introducing the filler in the casing through the open upper end thereof, applying a second end cap upon the upper end of the casing and over the upper end of the link, and soldering the second end cap and link together.

13. The method of assembling an electric fuse having a tubular enclosing casing, end caps on the ends of the casing, a fuse link which extends lengthwise of the casing and is connected with the

end caps, and a loose arc-quenching filler in the casing about the link, which method comprises supporting an end cap with its open end down, inserting the upper end of the link upwardly through an opening in the end wall of the cap, soldering the link and cap together while they are supported in such relation, inverting the soldered cap and link and inserting the lower end of the casing in the inverted cap, supporting the cap and the casing vertically while introducing the filler in the casing through the open upper end thereof, applying a second end cap upon the upper end of the casing and over the upper end of the link, soldering the second end cap and link together, and subsequently crimping the end caps onto the casing.

14. The method of assembling an electric fuse having a tubular enclosing casing, end caps on the ends of the casing, and a fuse link extended lengthwise of the casing and connected with the end caps, which method comprises assembling the aforesaid elements in the aforesaid relation and holding the end caps upon the casing temporarily by the fuse link alone, and subsequently securing the end caps to the casing independently of the fuse link.

15. The method of assembling an electric fuse having an enclosing casing, end caps on the ends of the casing, and a fuse link extended lengthwise of the casing and connected to the end caps, which method comprises connecting an end cap and one end of the link together dissociated from the casing, and subsequently connecting the other end of the fuse to the other end cap when both end caps are on the ends of the casing.

16. The method of assembling an electric fuse having an enclosing casing, end caps on the ends of the casing, and a fuse link extended lengthwise of the casing and connected to the end caps, which method comprises advancing an end cap, inserting one end of the fuse link through the end wall of the end cap, advancing both the cap and the link while soldering them together, inserting one end of the casing into the end cap over the link, advancing the assembled parts with the end cap lowermost and the open end of the casing uppermost, applying a second end cap upon the open end of the casing and over the other end of the link, and soldering the link and other end cap together while they advance.

17. The method of assembling an electric fuse having an enclosing casing, end caps on the ends of the casing, a fuse link extended lengthwise of the casing and connected to the end caps, and a loose arc-quenching filler in the casing, which method consists in connecting an end cap to one end of the fuse link, inserting one end of the casing in the end cap and around the link, advancing the assembled parts with the open end of the casing uppermost, introducing the filler into the open end of the advancing casing, and subsequently applying a second end cap upon the upper end of the filled casing and connecting it to the upper end of the link.

18. The method of assembling an electric fuse having an enclosing casing, end caps on the ends of the casing, a fuse link extended lengthwise of the casing and connected to the end caps, and a loose arc-quenching filler in the casing, which method consists in connecting an end cap to one end of the fuse link, inserting one end of the casing in the end cap and around the link, advancing the assembled parts with the open end of the casing uppermost, introducing the filler into the open end of the advancing casing and while vibrating the advancing casing, and subsequently applying a second end cap upon the upper end of the filled casing and connecting it to the upper end of the link.

19. The process of making an electric fuse of the cartridge type having an enclosing casing, end caps on the ends of the casing and a fuse link connecting the end caps, which process includes the steps of forming a fuse link with shoulders on each end and reduced end portions that extend beyond the shoulders, forming end caps with openings in their end walls that receive the reduced end portions only up to the shoulders, applying the end caps over the end portions, removing excessive lengths of end portions that project beyond the end caps, and connecting the end portions to the end caps.

20. The process of making an electric fuse of the cartridge type having an enclosing casing, end caps on the ends of the casing and a fuse link connecting the end caps, which process includes the steps of forming a fuse link with a shoulder and a reduced end portion that extends beyond the shoulder, forming an end cap with an opening in its end wall that receives the reduced end portion only up to the shoulder, inserting the end portion in the opening of the end cap and seating the cap upon the shoulder, removing that part of the end portion that extends excessively beyond the end cap, and connecting the end portion to the end cap.

21. The process of making an electric fuse of the non-refillable cartridge type having an enclosing casing, end caps on the ends of the casing and a fuse link connecting the end caps, which process includes the steps of forming a fuse link with a body portion and a reduced end portion and a shoulder at the junction of the body and end portion, forming an end cap with a passage through its end wall through which the end portion of the fuse link can be inserted up to but not beyond the shoulder, said end portion having a length that is greater than the length of the end cap, inserting the end portion of the fuse link in the passage in the end cap up to the shoulder, removing that portion of the reduced portion that projects beyond the end cap, and connecting the reduced portion to the end cap.

22. The process of assembling an electric fuse comprising a tubular enclosing casing, end caps fixed onto the opposite ends of the casing, and a fusible link extended lengthwise of the casing and having its ends connected with said end caps, which process comprises connecting the end caps on the casing by the fuse link and thereby securing the caps and casing against detachment, and thereafter crimping any uncrimped cap to the casing.

23. The process of assembling an electric fuse comprising a tubular enclosing casing, end caps fixed onto the opposite ends of the casing, a fusible link extended lengthwise of the casing and having its ends connected with said end caps, and a loose arc-quenching filler in the casing, which process comprises introducing the filler into a casing that has an end cap on one end and a fuse link soldered to the end cap, applying an end cap to the other end of the filled casing, soldering the link to the second end cap, and thereafter crimping the second end cap to the casing.

24. The process of assembling an electric fuse comprising a tubular enclosing casing, end caps

fixed onto the opposite ends of the casing, a fusible link extended lengthwise of the casing and having its ends connected with said end caps, which process comprises applying an end cap upon the open end of a casing that has an end cap on the other end thereof and a fuse link soldered thereto, soldering the last applied end cap to the fuse link, and subsequently crimping the last applied end cap to the casing.

25. The process of assembling an electric fuse comprising a tubular enclosing casing, end caps fixed onto the opposite ends of the casing, a fusible link extended lengthwise of the casing and having its ends connected with said end caps, which process comprises providing a casing having an end cap on one end thereof with a fuse link soldered thereto that projects beyond the open end of the casing, applying an end cap upon the open end of the casing over the end of the fuse link, removing excessive fuse link material that projects beyond the end of the second end cap, soldering the fuse link to the second end cap, and then crimping the second end cap to the casing.

26. The method of assembling an electric fuse having a tubular enclosing casing, end caps on the ends of the casing and a fuse link extended lengthwise through the casing and into apertures in the end walls of the end caps and is soldered thereto, which method includes the steps of providing a casing with an end cap having a fuse link soldered thereto which projects beyond the open end of the casing, applying the other end cap to the open end of the casing and over that part of the fuse link that projects beyond the end of the casing, and trimming off any surplus fuse link that extends outwardly beyond the end cap, and soldering the trimmed end of the link to the other end cap.

MORRIS B. WOOD.