Jan. 15, 1935. W. H. CHURCH 1,988,163

CENTRIFUGAL PUMP

Filed March 21, 1930 4 Sheets-Sheet 1

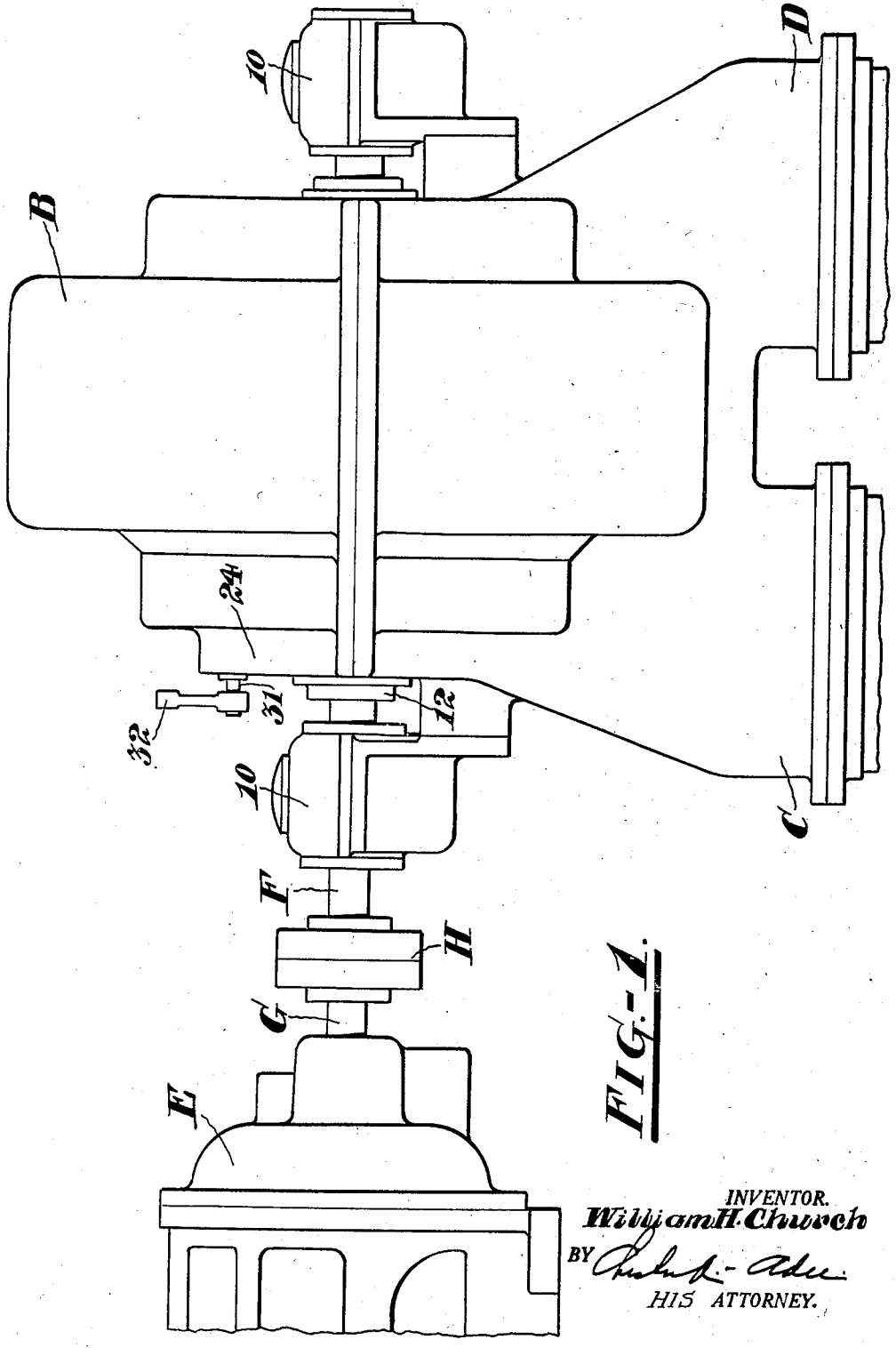

FIG. 1.

INVENTOR.
William H. Church
BY
HIS ATTORNEY.

Jan. 15, 1935. W. H. CHURCH 1,988,163

CENTRIFUGAL PUMP

Filed March 21, 1930 4 Sheets-Sheet 2

FIG.-2.

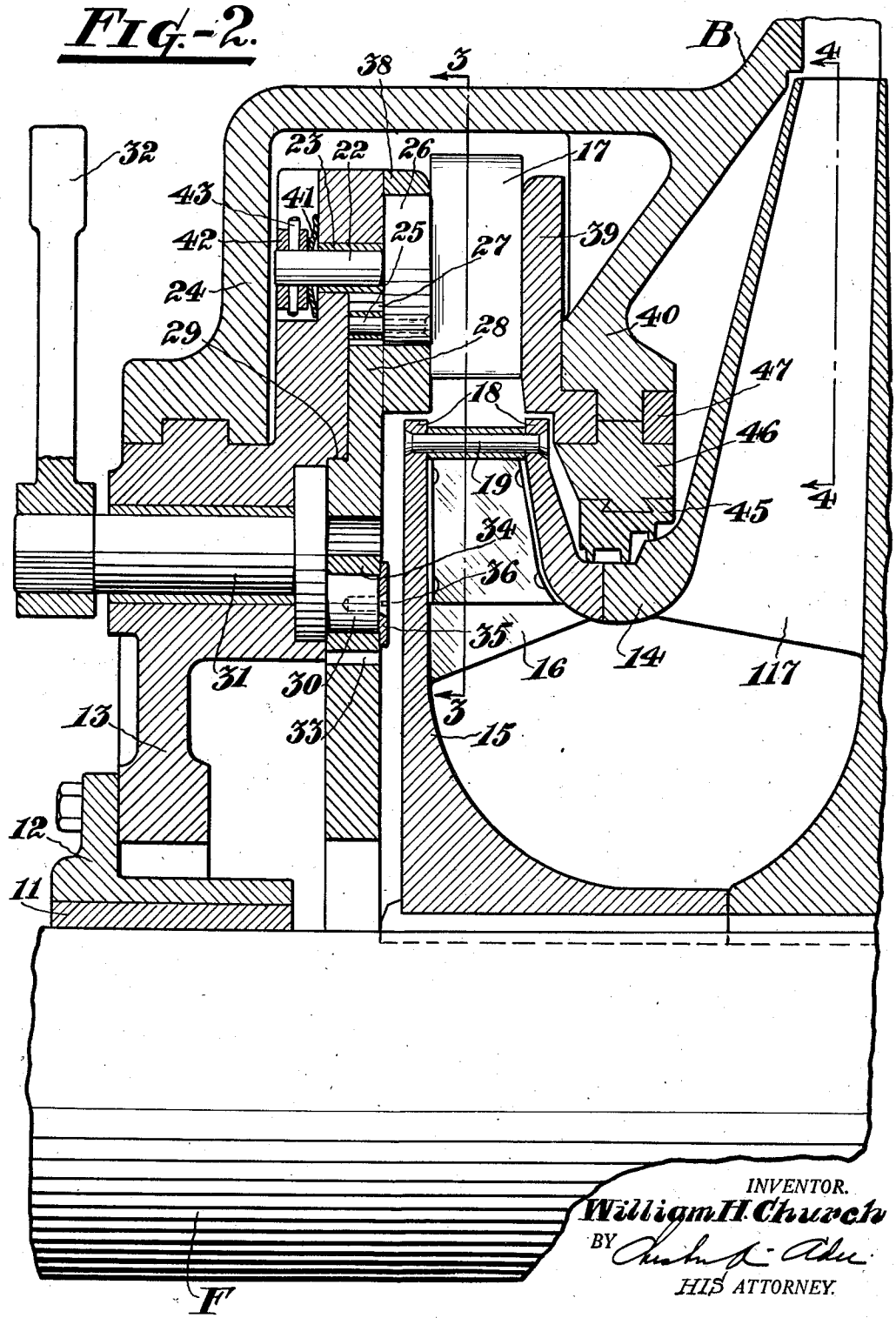

INVENTOR.
William H. Church
BY Christy & Ade
HIS ATTORNEY.

Jan. 15, 1935. W. H. CHURCH 1,988,163

CENTRIFUGAL PUMP

Filed March 21, 1930 4 Sheets-Sheet 3

FIG.-3.

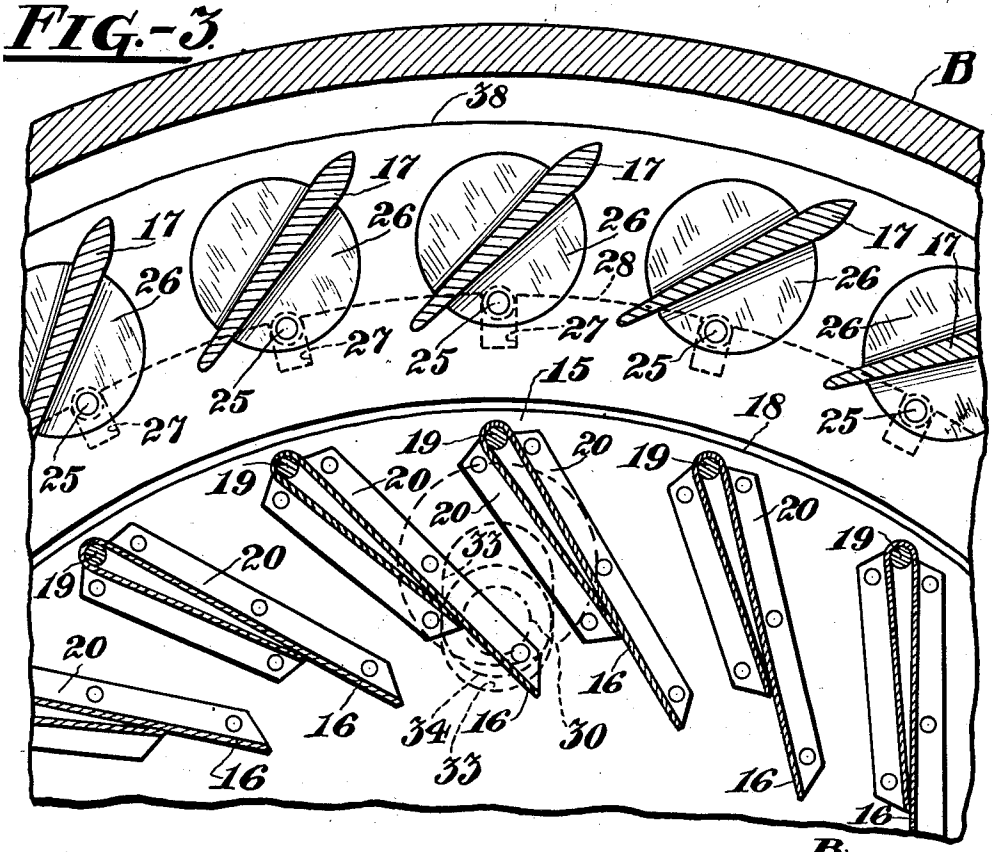

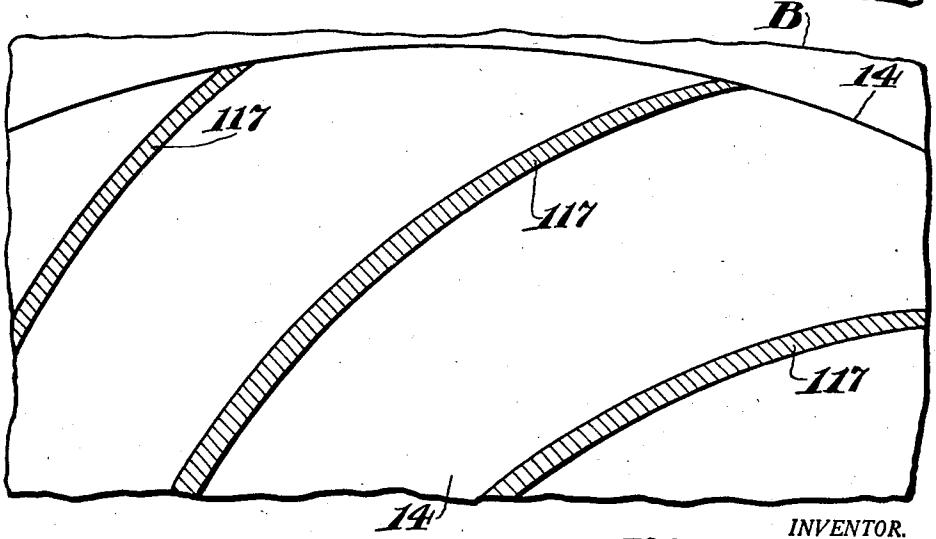

FIG.-4.

INVENTOR.
William H. Church
BY
HIS ATTORNEY.

Jan. 15, 1935. W. H. CHURCH 1,988,163

CENTRIFUGAL PUMP

Filed March 21, 1930 4 Sheets-Sheet 4

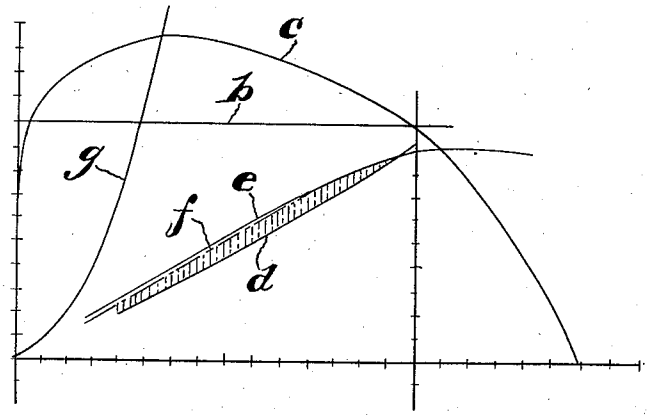

FIG.-5.

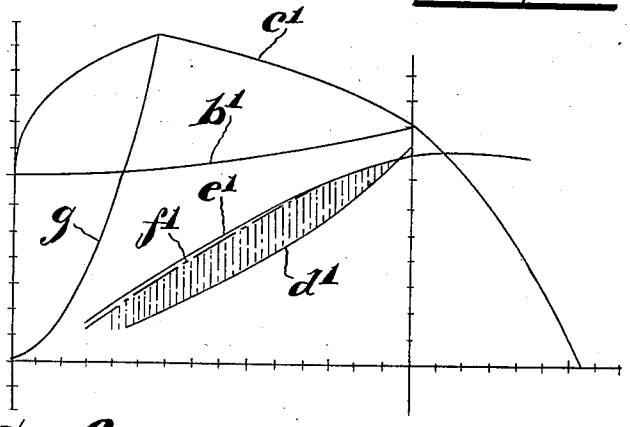

FIG.-6.

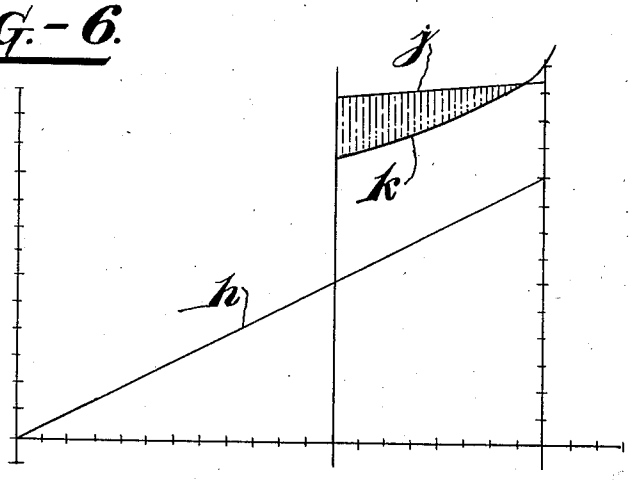

FIG.-7.

INVENTOR.
William H. Church.
BY
HIS ATTORNEY.

Patented Jan. 15, 1935 1,988,163

UNITED STATES PATENT OFFICE

1,988,163

CENTRIFUGAL PUMP

William H. Church, Mount Vernon, N. Y., assignor to Ingersoll-Rand Company, Jersey City, N. J., a corporation of New Jersey

Application March 21, 1930, Serial No. 437,767

4 Claims. (Cl. 103—97)

This invention relates to centrifugal pumps and more particularly to pumps adapted to be driven at a constant speed.

One object of the invention is to enable a centrifugal pump to be operated at a constant speed and to reduce the power consumed when the pump is operating at reduced capacity or reduced pressure or both.

Another object of the invention is to recover excess power usually employed to drive a centrifugal pump. Other objects and advantages will be in part obvious and in part pointed out hereinafter.

As heretofore constructed, a centrifugal pump is primarily a constant pressure, variable volume machine when driven at constant speed. When motor drive has been considered in large pumps alternating current has usually been used in connection with a constant speed induction or synchronous motor. A serious problem occurs when under certain conditions variable pressure is required from such a pump. The pump has usually been designed for the maximum pressure and all pressures below maximum were obtained by throttling, at a large sacrifice in power, that is, the friction loss due to throttling represents power waste. The invention described hereinafter overcomes this condition and allows variable pressure to be obtained without throttling and any great sacrifice in power.

The invention also allows variable volume to be obtained at a predetermined pressure equal to or less than rated maximum pressure without throttling or any great sacrifice in power; due to the natural drooping characteristic of a centrifugal pump, as regards higher pressure at volumes less than maximum.

In the preferred embodiment of the invention described in more detail hereinafter, this is accomplished as follows:

The fluid passing through the centrifugal pump flows through a fluid turbine connected to the main shaft. This turbine develops the power which has heretofore been lost in throttling and returns this power to the main shaft, thereby removing part of the load from the motor which drives the pump. The net load on the motor is the difference between the load required by the pump and that developed by the turbine. The turbine may be located in any suitable position with regard to the various stages of a pump, either before the first stage, after the last stage or between stages as will be understood.

By means of this construction the pump can be operated advantageously at part loads because the possible recovery in power obtained through the instrumentality of the turbine is increased as the load on the pump is reduced. At full load the turbine is of no effect and maximum power is expended; but as the load diminishes, the turbine is so operated that more and more power is recovered, and economical operation is thus facilitated from full load down to part loads that are very small in comparison with the maximum load of the pump.

The invention may be more completely understood by reference to the drawings in which similar reference characters refer to similar parts and in which

Figure 1 is a side elevation of a blower driven by a constant speed electric motor,

Figure 2 is a vertical longitudinal section through part of the intake portion of the blower,

Figure 3 is a section through the blower taken along the lines 3—3 of Figure 2 looking into the direction of the arrows,

Figure 4 is a section through the first stage of the motor taken along the line 4—4 of Figure 2 looking in the direction of the arrows,

Figure 5 is a graph showing the comparative characteristics of pressures, volumes and power consumed of the blower operating at constant pressure with and without the turbine,

Figure 6 is a graph showing comparative characteristic curves of the blower with and without the turbine portion operating at pressures varying with the capacity and

Figure 7 is a graph showing the power consumption at constant volume and variable pressures to operate the blower with and without the turbine.

Referring to the drawings and more particularly to Figure 1 a centrifugal pump or blower housing B provided with a suitable inlet C and discharge D is adapted to be driven by a substantially constant speed motor or other driving element E. In this instance the shaft F of the blower B is coupled to the shaft G of the motor by any well known form of coupling, as for instance the flanged coupling H. The shaft F is provided with suitable bearings 10 and extends into the blower B through a suitable bushing 11 held in place by a flanged ring 12 bolted to a bearing support member 13. On the shaft F are mounted a series of pump impellers 14 only one of which is shown, it being understood that the invention is applicable to a pump having a single impeller or any number.

It is to be understood that a compressor of this type is adapted to produce substantially a

constant ratio of compression for any given speed of rotation of the shaft F and discharge volume. Therefore at a constant discharge volume and constant speed a way of altering the discharge pressure would be to vary the suction pressure accordingly. This has been done heretofore by throttling the inlet which throttling represents a loss of pressure and consequently a waste of power.

In accordance with the practice of this invention a drop in pressure is produced at the suction of the first stage impeller 14 by means of a turbine which comprises a rotor of vane wheel 15 having turbine blades or vanes 16 and suitable relatively stationary entrance vanes 17 through which the air entering at the inlet C is adapted to pass due to the suction of the rotor 14. As is indicated in Figures 3 and 4 the turbine blades 16 are directed oppositely to the blower vanes 117 of the rotor 14. Preferably the turbine vanes 16 are suitably attached to shrouds 18, in this instance being shown made of steel bent at the ends over pins 19 and flanged as at 20 to be attached to the shrouds.

As is well known the power of the turbine is partly due to the angle at which the actuating fluid is directed at the rotating vanes. Accordingly the entrance vanes 17 are adjustable so as to vary the angle of inclination of the fluid passing therethrough and directed at the vanes 16. To this end each vane 17 is mounted on a rotatable shaft 22 with suitable bearings or bushings 23 in the support member 13 dovetailed into the housing 24 of the compressor B. The shafts 22 are adapted to be rotated in unison by means of pin 25 extending laterally from a flange 26 on each shaft 22. Pins 25 engage slots 27 in the periphery of a ring 28 adapted to slide rotatively in the support member 13 being guided therein by a shoulder 29. Sliding of the ring 28 is effected by means of a crank 30 on the shaft 31 mounted in the support member 13 and provided with an external crank 32. The crank pin 30 fits into a slot 33 in the ring 28 and may be provided with a suitable wear bushing 34 held in place on the pin 30 by means of a washer 35 and screw 36. The entrance vanes 17 are suitably shrouded by side plates 38 and 39, the latter being supported by a general radially extending web 40 of the casing 24.

In order that the vanes 17 may be prevented from having end play or looseness the shafts 22 are provided at their ends with spring members 41 held in compression under washers 42 fastened in place by suitably tapered pins 43.

Leakage is prevented between the periphery of the turbine rotor 15 and the side clearance of the rotor 14 by means of a labyrinth packing and wearing ring 45 dovetailed into a ring 46 held in place on the web 40 by means of the side plate 39 and a ring 47.

Figures 5, 6 and 7 are curves plotted from performance of a gas blower constructed in accordance with the practice of this invention. Figure 5 shows the performance of the pump operating at constant speed and the discharge pressure maintained constant as indicated by the line *b*. Curve *c* shows the pressures corresponding to the discharge volumes when the turbine blades 16 and vanes 17 were removed. The saving in power consumed is indicated by the shaded section between curves *d* and *f*. Curve *d* shows the power consumption at constant pressure with a portion of the power being recovered or saved by the turbine. Curve *f* shows the power consumption with a valve (not shown) throttling the intake and indicates nearly as great power as without throttling and the turbine removed, the results of which are shown by curve *e*. An important advantage of the use of the turbine is the increased range possible with its use. Ordinarily a blower or centrifugal pump is unstable at low discharge volumes. For instance, the pump being tested could not be operated at volumes below those indicated by the curve *g* because of surging. With the turbine in operation this surging and unstability does not occur except at extremely low discharge volumes.

In operation, assuming that the motor E is of a type which operates at a substantially constant speed such as an induction or a synchronous type, there will be a fixed ratio of compression produced by the pump. By this is meant that the ratio of the final pressure at the discharge D to the pressure at the entrance to the rotor 14 will be substantially a constant. Certain losses due to friction will vary disproportionately. Heretofore, a common method of obtaining the desired discharge pressure was to throttle the inlet by means of a suitable valve which could be adjusted to produce a suction pressure which in turn would produce the desired discharge pressure. In such an arrangement the reduction in suction pressure was due to a friction loss in the valve and represents a waste of power. No such waste is found in the present invention since the fluid being pumped passes from the inlet C through the turbine comprising the entrance vanes 17 and rotor 15 which are adjusted so as to develop power and correspondingly cause a pressure drop. The amount of drop in pressure and power developed by the turbine may be adjusted by suitable manipulation of the lever 32 by which means the inclination of vanes 17 to the blades 16 is altered.

In Figure 6 is shown the performance of the pump operating at constant speed, the pressure varying with the capacity. Curve *b'* indicates the rise in pressure with increase in volume and *c'* shows the falling in pressure with the turbine removed. The power consumption of the pump with the turbine is shown by *d'*, that of the pump with turbine removed by *e'*, and the power used by the pump when throttled to give the same pressure and volume results shown by *b'* are indicated by *f'*.

Figure 7 shows horsepower curves for the pump operating at constant speed and constant volume. The curves are plotted with power as ordinates and percent of mean effective pressure as abscissæ. Curve *h* shows the theoretical horsepower and *j* shows the power with the turbine removed from the pump. Curve *k* shows the power consumption with the turbine in operation. The saving in power is indicated by the shading.

In each case as shown by Figures 5, 6 and 7 there is a very slight loss in efficiency at high volumes when the turbine is practically out of operation due to friction loss through the vanes 17 and blades 16. This however is much more than offset by the very great increase in efficiency at partial loads.

The vanes 17 will in practice be adjusted so that, when the pump is operating at full load they will be in radial position and the fluid entering the pump will flow directly toward the axis of the shaft as it issues from the spaces between the inner ends of the vanes 17. The fluid will then have no tangential component and no

power will be recovered by the turbine. But when the pump is to be operated at part load, the vanes 17 will be shifted more and more away from the radial position so that more and more power will be given back by the turbine to the pump shaft. The turbine thus compensates for the resistance to the inflow which the vanes 17 offer. Hence, none of the losses usually encountered when a pump of this type is operating at part load by throttling the fluid will be sustained. In other words, the general arrangement is such as to diminish the power for driving the pump only when it is operating below its rated outlet pressure or below its rated volume when the speed is constant. At full rated pressure or volume the turbine does not act as a motor and no power is recovered and restored to the shaft; because as above stated, the inlet guide vanes 17 at this time do not permit the fluid issuing from between them to have a tangential velocity component in the direction of rotation. But when the load is reduced and the vanes 17 are properly shifted, the inlet pressure drops and the outlet or compression pressure falls also. The turbine thus operates at certain times with equal pressures at the inner and outer ends of the vanes 17, and no drop in pressure takes place through the turbine; and at other times with a very considerable pressure drop through the turbine. It is thus radically different in operation from the ordinary turbine and gives a different result.

The turbine can also be placed at the outlet end of the pump housing, and substantially the same result can be had, but with less advantage. I prefer to locate it on the inlet side of the rotor because there the pressure of the fluid is less, and the liability of external leakage is thus reduced. Also with a blower of this type there is usually ample space available on the inlet side of the housing to receive the rotating member of the turbine and the guide vanes. No increase in the length of the main shaft or material alteration in the size or shape of the housing is necessary.

The inlet guide vanes 17 are described above as being in substantially radial position when the turbine has no effect due to the greatly increased flow area between said inlet guide vanes which reduces the velocity of flow and provides virtually no tangential component to rotate the turbine vane wheel. But of course I do not wish to be limited to inlet guide vanes which must be radial when the turbine is neutral. I may obviously construct my invention so that the turbine will recover no power at full load on the pump when the inlet guide vanes are in some other position than radial, depending upon the character and arrangement of these vanes and those carried by the rotor 15; so long as the combined effects of the tangential components at both inlet and outlet of the turbine vane wheel produce no resultant tangential component to rotate the turbine vane wheel.

Thus by the above constructions are accomplished among others the objects hereinbefore referred to.

I claim:

1. A centrifugal pump for a fluid medium comprising a rotor having pump vanes, a turbine placed to receive fluid passing through the pump, said turbine comprising a vane wheel which revolves with said rotor and inlet guide vanes mounted to direct fluid to said vane wheel, and means for adjusting said guide vanes from neutral position at full load to effective positions at part load.

2. A centrifugal pump for a fluid medium comprising a housing, a rotor having pump vanes, a turbine placed to receive fluid passing through the pump, said turbine comprising a vane wheel which revolves with said rotor and inlet guide vanes to direct fluid to said vane wheel, and means for adjusting said guide vanes from neutral position at full load to effective positions at part load, said turbine being disposed within the housing of the pump on the inlet side thereof.

3. A centrifugal pump comprising a housing with a rotor therein, said rotor having pump vanes, a turbine placed to receive fluid passing through the pump, said turbine comprising a vane wheel mounted to revolve with said rotor, and inlet guide vanes mounted to direct fluid to said vane wheel, and means to adjust said guide vanes from neutral position at full load, rendering the turbine of no effect, to an effective position at part load to enable the turbine to recover part of the power to operate the pump.

4. A centrifugal pump comprising a housing with a rotor therein, said rotor having pump vanes, a turbine placed to receive fluid passing through the pump, said turbine comprising a vane wheel mounted to revolve with said rotor and inlet guide vanes mounted to direct fluid to said vane wheel, and means to adjust said guide vanes from neutral position at full load, rendering the turbine of no effect, to an effective position at part load to enable the turbine to recover part of the power to operate the pump, said turbine being disposed at the inlet end of said housing.

WILLIAM H. CHURCH.