US 20160345690A1

(19) **United States**

(12) **Patent Application Publication** (10) **Pub. No.: US 2016/0345690 A1**

SCANDOLARO (43) **Pub. Date: Dec. 1, 2016**

(54) **EXTENSIBLE BRACELET**

(71) Applicant: **Picchiotti S.r.l.**, Valenza AL (IT)

(72) Inventor: **Ennio SCANDOLARO**, Valenza AL (IT)

(73) Assignee: **Picchiotti S.r.l.**, Valenza AL (IT)

(21) Appl. No.: **15/163,781**

(22) Filed: **May 25, 2016**

(30) **Foreign Application Priority Data**

May 28, 2015 (IT) 102015000018764

Publication Classification

(51) **Int. Cl.**
A44C 5/00 (2006.01)

(52) **U.S. Cl.**
CPC ***A44C 5/0069*** (2013.01); ***A44C 5/0076*** (2013.01)

(57) **ABSTRACT**

An extensible bracelet comprises an annular element formed by a plurality of links and an elastic ring which is mounted to extend through each link . Each link has a female element and a male element, which are mutually movably attached to the male element and the female element, respectively, of the adjacent links. Particularly, each male element comprises a slot and each female element comprises a side hole for a pin that extends through said side hole and through the slot to restrict the movement of the female element of one link and the male element of the link adjacent thereto away from each other.

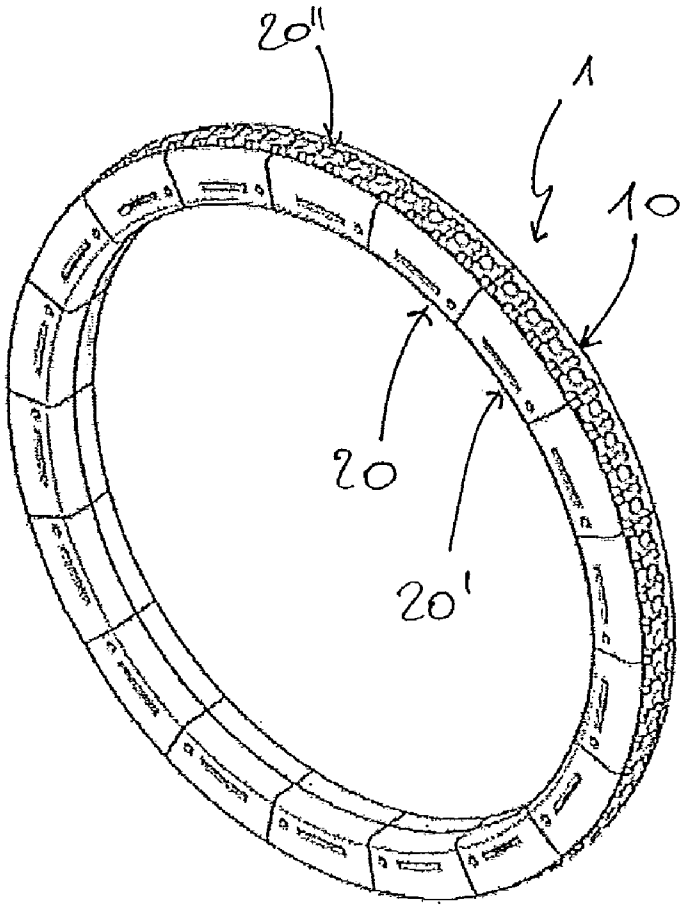

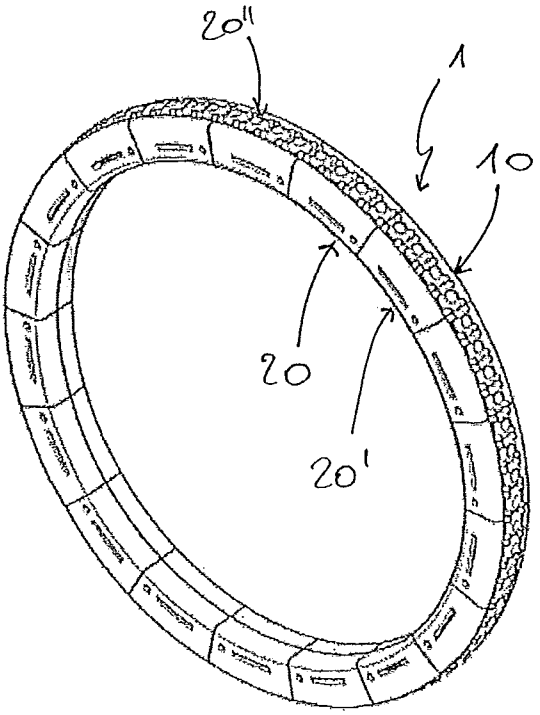

FIG.1

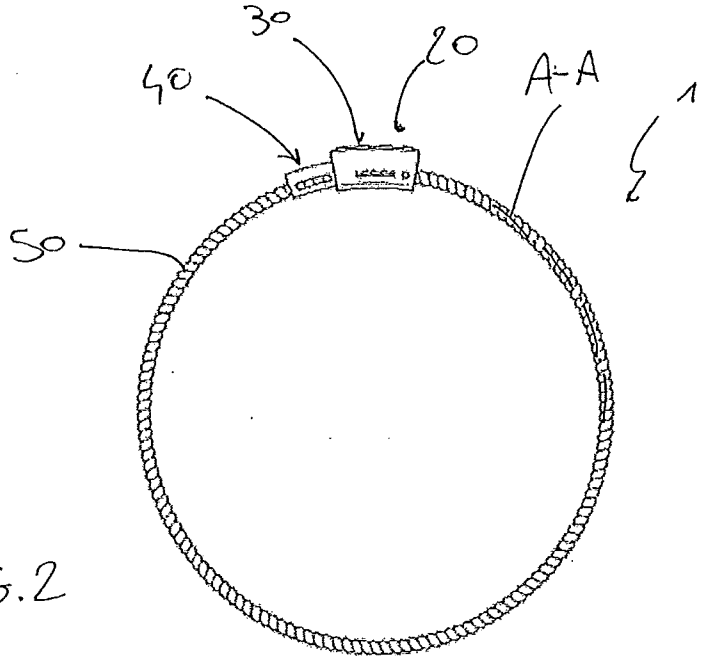

FIG.2

FIG. 3

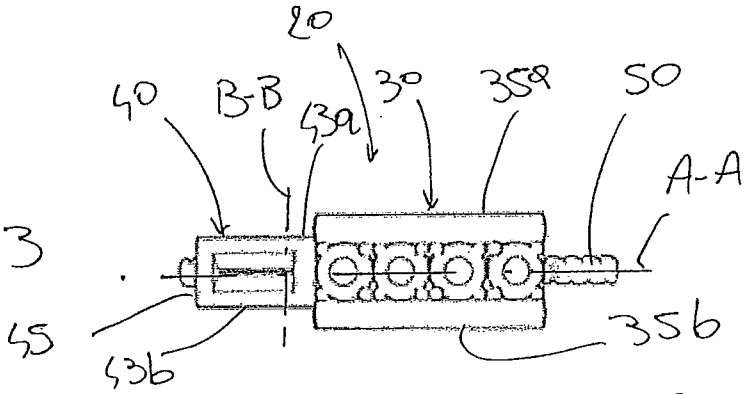

FIG. 4

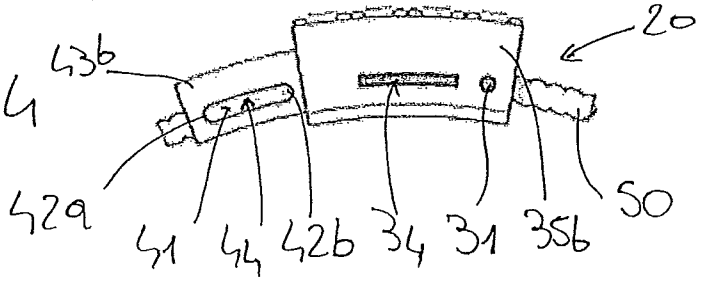

FIG. 5

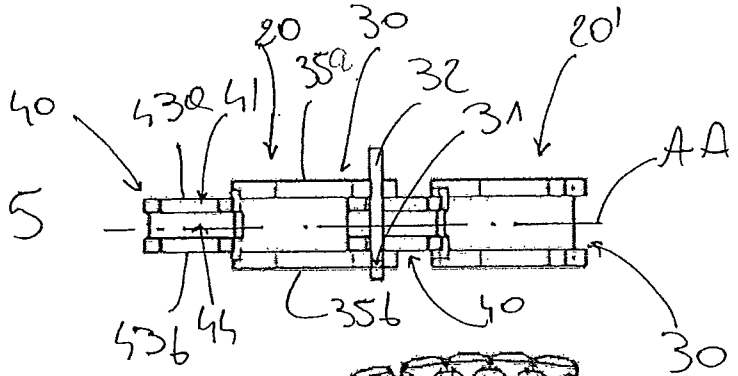

FIG. 6

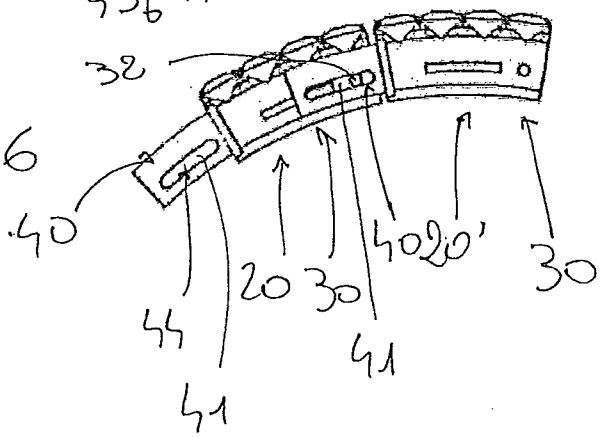

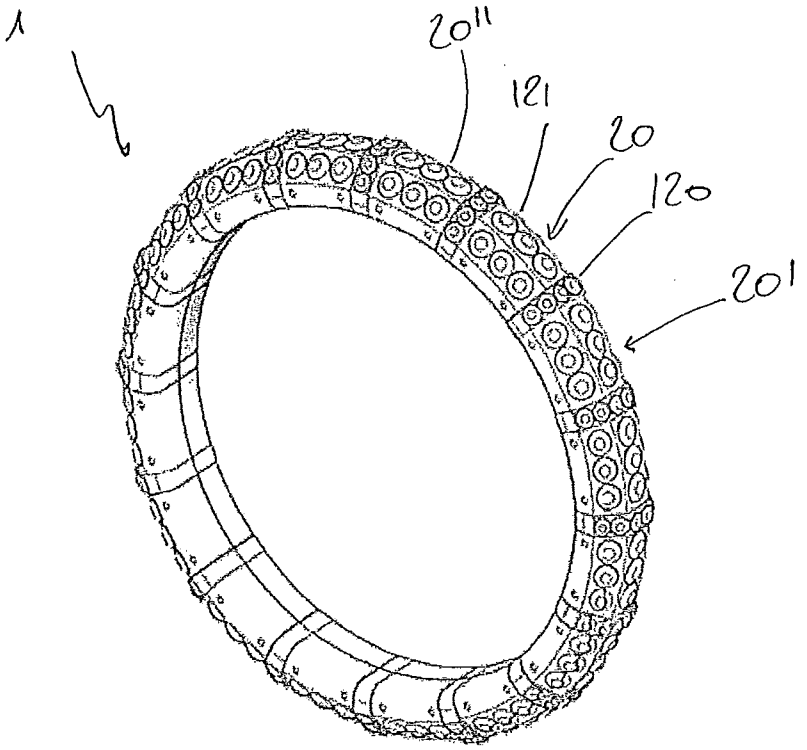

FIG.7

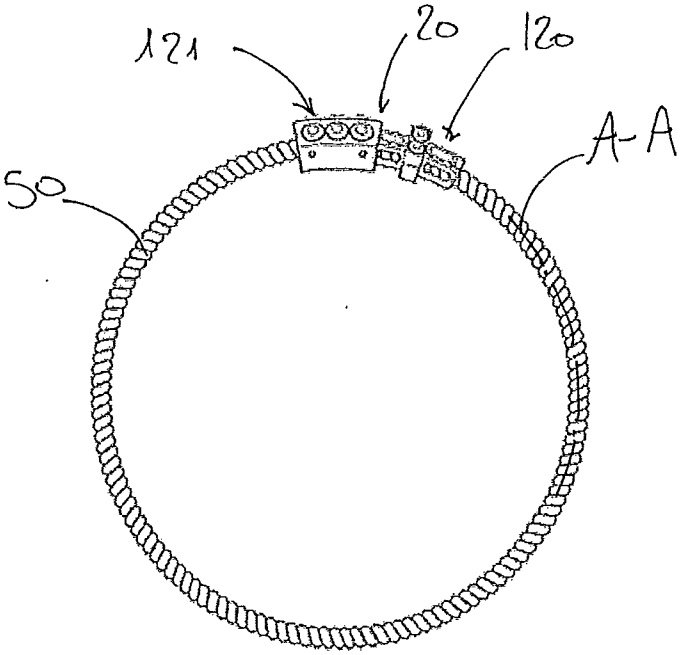

FIG.8

FIG. 9

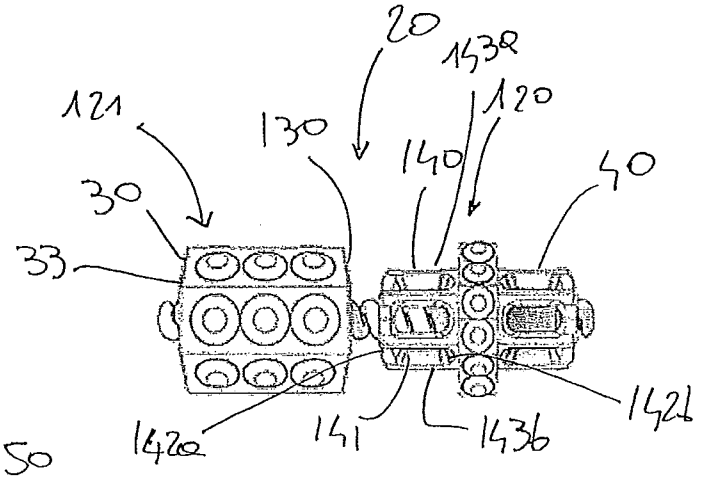

FIG. 10

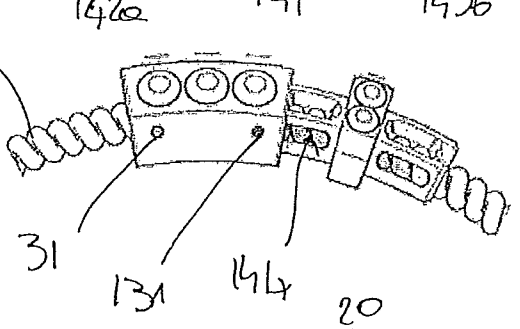

FIG. 11

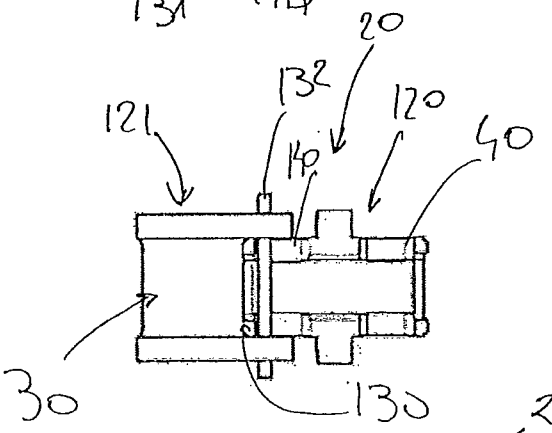

FIG. 12

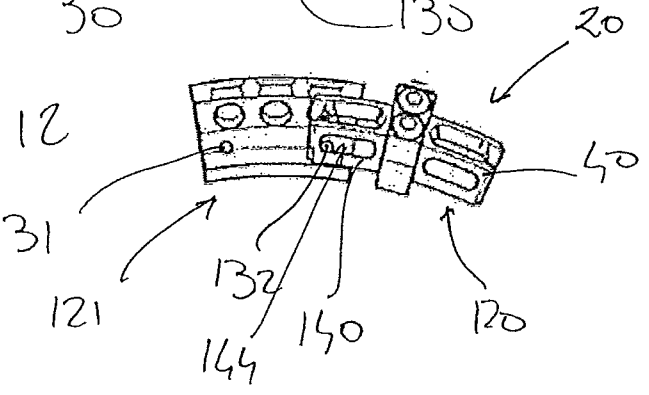

EXTENSIBLE BRACELET

THE FIELD OF THE INVENTION

[0001] The present invention relates to an extensible bracelet.

BACKGROUND OF THE INVENTION

[0002] Extensible bracelets are known in the art and are disclosed, for instance, in U.S. Pat. No. 5,605,059, EP 2712513, U.S. Pat. No. 2,608,050 and U.S. Pat. No. 1,250,153.

[0003] U.S. Pat. No. 5,605,059 discloses a bracelet with an elastic ring having links mounted thereon that are able to slide relative to each other and to the elastic ring, to change the diameter of the bracelet and adapt the diameter of the wrist of the bracelet wearer. Each link consists of a male element that fits into the hole of an adjacent link.

[0004] EP 2712513, U.S. Pat. No. 2,608,050 and U.S. Pat. No. 1,250,153 also disclose a bracelet with an elastic ring with links mounted thereon that are able to slide relative to each other and to the elastic ring. The links comprise a sleeve with two opposite holes and a sleeve with two male elements that are coupled to respective holes of adjacent sleeves for the two adjacent sleeves to be able to move relative to each other and to the male elements.

[0005] Other examples of extensible bracelets are disclosed in US-RE-25,163, U.S. Pat. No. 2,518,507 and U.S. Pat. No. 2,718,750.

[0006] Nevertheless, the bracelets as disclosed and illustrated in the above mentioned documents are characterized by a complex structure that complicates assembly, disassembly as well as any replacement, addition or removal of links and the construction of the individual parts. Furthermore, in these bracelets, the extension and contraction movements of the elastic ring to a greater diameter and a smaller diameter respectively are not smooth and can be affected by stick-slip effects, causing user dissatisfaction, especially in case of precious metal bracelets, that are expected to exhibit accuracy and perfection.

SUMMARY OF THE INVENTION

[0007] Thus, an extensible bracelet is desired, which has a simple construction structure, is characterized by easy assembly and manufacture of its parts and has a smooth and even movement during both extension and contraction of the bracelet.

[0008] Therefore, the object of the present invention is to provide an extensible bracelet that has such structural and functional features as to fulfill the above needs, while obviating the drawbacks of prior art.

[0009] These and other objects, as better explained hereafter, are fulfilled by the bracelet as defined in claim **1**.

BRIEF DESCRIPTION OF THE FIGURES

[0010] The invention will be now described in greater detail with reference to a preferred embodiments thereof, given by way of illustration and without limitation, and shown in the annexed drawings, in which:

[0011] FIG. **1** shows a perspective view of an extensible bracelet according to a first embodiment of the present invention,

[0012] FIG. **2** shows a side view of a link of the bracelet of FIG. **2**, when mounted to the elastic ring,

[0013] FIG. **3** shows a top view of the link of FIG. **2**,

[0014] FIG. **4** shows a side view of the link of FIG. **2**,

[0015] FIG. **5** shows a horizontal sectional view of the link of FIG. **2**,

[0016] FIG. **6** shows a vertical sectional view of the link of FIG. **2**,

[0017] FIG. **7** shows a perspective view of an extensible bracelet according to a second embodiment of the present invention,

[0018] FIG. **8** shows a side view of a link of the bracelet of FIG. **7**, when mounted to the elastic ring,

[0019] FIG. **9** shows a top view of the link of FIG. **8**,

[0020] FIG. **10** shows a side view of the link of FIG. **8**,

[0021] FIG. **11** shows a horizontal sectional view of the link of FIG. **8**,

[0022] FIG. **12** shows a vertical sectional view of the link of FIG. **8**.

DETAILED DESCRIPTION OF THE INVENTION

[0023] Referring to the annexed figures, numeral **1** generally designates an extensible bracelet of the present invention.

[0024] Particularly referring to the FIGS. **1** to **6**, an extensible bracelet **1** according to a first embodiment of the present invention is shown.

[0025] The bracelet **1** comprises an annular element **10** and an elastic ring **50**.

[0026] The annular element **10** is formed by a plurality of links **20** disposed in mutually adjacent relationship in an annular direction A-A.

[0027] Preferably, the links are made of a metal material, particularly a precious metal such as gold, silver, platinum.

[0028] The elastic ring **50** is mounted to extend through each link **30** in the annular direction A-A. For this purpose, the elastic ring **50** will have a closing area that will be closed once all the links **20** of the annular element **10** have been mounted.

[0029] In one embodiment, the elastic ring **50** is formed by a spiral spring made of a metal material. Alternatively, the elastic ring **50** may be made of an elastomeric material. Due to its elastic properties, the elastic ring **50** may expand in the radial direction to fit the diameter of the wrist of the user that wears the bracelet **1**.

[0030] Each link **20** is coupled on each side to a link adjacent thereto, hereinafter referenced **20'** and **20"**, so that they are able to move relative to each other in the annular direction A-A.

[0031] Each link **20** has a female element **30** at a first end portion **21** and a male element **40** at a second end portion **22** opposite to the first end portion **21**.

[0032] The female element **30** and the male element **40** of each link, in this example the link **20**, are mutually movably attached to the male element and the female element, respectively, of the two links **20'**, **20"** adjacent thereto at each side of the link **20**. For simplicity the male and female elements of the two adjacent links are also referenced **40** and **30**.

[0033] Thus, each links forms, at each side, a male-female and female-male coupling with a respective adjacent link, which allows the adjacent links to move toward and away from each other upon contraction and expansion of the elastic ring **10**.

[0034] Particularly, each male element **40** comprises a slot **41** that extends in the annular direction A-A. The slot **41** is closed by two ends **42***a*, **42***b* in such annular direction A-A, and is open between two side walls **43***a*, **43***b* of the male element **40** to define a through opening **44** extending between these two side walls **43***a*, **43***b* in a transverse direction B-B, perpendicular to the annular direction A-A.

[0035] Each female element **30** comprises a side hole **41**, whose axis C extends in a direction parallel to the transverse direction B-B, and a pin **32**.

[0036] The pin **32** extends through the side hole **31** and the through opening **44** of the slot **41** of the male element **40** of the link **20'** adjacent to the link **20**, to restrict the movement of the female element **30** of one link **20** and the male element **40** of the link **20** adjacent thereto away from each other in the annular direction A-A, Therefore, the structure of extensible bracelet **1** has a simple construction, which facilitates assembly, as well as any replacement, addition or removal of one or more links.

[0037] In the example of the figures, the female element **30** has two side walls **35***a*, **35***b* and the side hole **31** is formed in the side wall **35***b* to receive one end of the pin **32**. The other side wall **35***a* may have a second side wall or a closed seat for receiving the other end of the pin **32**.

[0038] Each female element **30** has an annular opening **33** whose axis extends in the annular direction A-A, and a cavity **34**. The annular opening **33** is configured to allow the male element **40** of the adjacent link **20** to extend therethrough, and the cavity **34** is configured to receive said male element **40** of the adjacent link **20**.

[0039] Preferably, the side hole **21** is disposed proximate to the annular opening **33**.

[0040] According to an advantageous embodiment, the male element **40** of each link **20** creates a form fit with the respective female element **30** of the link **20** adjacent thereto. Thus the female element **30** guides the movement of the male element **40** through the annular opening **33** into the cavity **34**.

[0041] Advantageously, each male element **40** extends to a head end **45** and one of the two ends **42***a*, **42***b* of the slot **41** is placed in the proximity of this head end **45**.

[0042] FIGS. **7** to **12** show a second embodiment of the extensible bracelet **1** of the present invention.

[0043] In this second embodiment, each link **20** comprises a first portion **120** and a second portion **121** which are mutually coupled such that they can move relative to each other in the annular direction A-A. The first portion **120** is provided with a male element **40** and the second portion **121** is provided with a female element **30** such that the male element **40** of the first portion **120** of the link **20** is movably coupled to the female element **30** of the second portion **131** of the link **20'** adjacent thereto and the female element **30** of the second portion **121** of the link **20** is movably coupled to the male element **40** of the first portion **120** of the link **20"** adjacent thereto on the side facing away from the link **20'**.

[0044] In this embodiment, the first portion **120** comprises an opposite male element **140** disposed opposite to said male element **40**, and the second portion **121** comprises an opposite female element **130** disposed opposite to the female element **30**, so that the opposite male element **140** of the first portion **120** and the opposite female element **130** of the second portion **121** are mutually attached such that they can move relative to each other in the annular direction A-A.

[0045] Preferably, each opposite male element **140** is formed like the male element **40** and each opposite female element **130** is formed like the female element **30**.

[0046] Thus, the opposite male element **140** comprises a slot **141** which extends in the annular direction A-A, is closed by two ends **142***a*, **142***b* in the annular direction A-A, and is open between two side walls **143***a*, **143***b* to define a through opening **144** extending between said two side walls **143***a*, **143***b* in the transverse direction B-B, perpendicular to the annular direction A-A.

[0047] Each opposite female element **130** comprises a side hole **131** whose axis extends in a direction parallel to the transverse direction B-B and a pin **132** that extends through the hole **131** and the through opening **144** of the slot **141** of the opposite male element **140**, to restrict the movement of the first portion **120** and the second portion **121** of each link **20** away from each other in the annular direction A-A.

[0048] Each opposite female element **130** has an annular opening **133** whose axis extends in the annular direction A-A, and a cavity **134**, in this example communicating with the cavity **34**. The annular opening **133** is configured to allow the opposite male element **140** of the first portion **120** to extend therethrough.

[0049] Preferably, the side hole **131** is disposed proximate to the annular opening **133**.

[0050] According to an advantageous embodiment, the opposite male element **140** of the first portion **120** creates a form fit with the respective opposite female element **130**, such that the opposite female element **130** guides the movement of the opposite male element **40** through the annular opening **133** and into the cavity **134**.

[0051] As clearly shown in the above description, the bracelet of the invention fulfills the above mentioned needs and also obviates the drawbacks of prior art extensible bracelets as set out in the introduction of this disclosure.

[0052] Those skilled in the art will obviously appreciate that a number of changes and variants may be made to the extensible bracelet of the invention as described hereinbefore to meet specific needs, without departure from the scope of the invention, as defined in the following claims.

1. An extensible bracelet, comprising:

an annular element formed by a plurality of links disposed in mutually adjacent relationship in an annular direction,

an elastic ring which is mounted to extend through each link in said annular direction, wherein:

each link is coupled to a link adjacent thereto, such that they can move relative to each other in the annular direction,

each link has a female element at a first end portion and a male element at a second end portion opposite to the first end portion,

the female element and the male element of each link are mutually movably attached to the male element and the female element, respectively, of the two links adjacent thereto at each side of said link,

each male element comprises a slot,

said slot extends in said annular direction, is dosed by two ends in said annular direction, and is open between two side was to define a through opening extending between said two side walls in a transverse direction, perpendicular to said annular direction,

each female element comprises a side hole whose axis extends in a direction parallel to said transverse direc-

tion and a pin that extends through said side hole and said through opening of the slot of the male element of the link adjacent thereto, to restrict the movement of the female element of one link and the male element of the link adjacent thereto away from each other.

2. The extensible bracelet as claimed in claim **1**, wherein:

each female element has an annular opening whose axis extends in said annular direction and which is configured to allow the male element of the adjacent link to extend therethrough, and a cavity configured to receive said male element of the adjacent link, and

said side hole is disposed proximate to said annular opening.

3. The extensible bracelet as claimed in claim **2**, wherein the male element of each link creates a form fit with the respective female element of the link adjacent thereto, such that the female element guides the movement of the male element through the annular opening and into the cavity.

4. The extensible bracelet as claimed in claim **1**, wherein:

each male element extends to a head end,

one of said two ends of said slot is disposed proximate to said head end.

5. The extensible bracelet as claimed in claim **1**, wherein:

each link comprises a first portion and a second portion which are mutually coupled such that they can move relative to each other in said annular direction,

said first portion has said male element, and

said second portion has said female element.

6. The extensible bracelet as claimed in claim **5**, wherein:

said first portion comprises an opposite male element disposed opposite to said male element,

said second portion comprises an opposite female element disposed opposite to said female element, and

the opposite male element of the first portion and the opposite female element of the second portion are attached to each other such that they can move relative to each other in said annular direction.

7. The extensible bracelet as claimed in claim **6**, wherein:

each opposite male element comprises a slot,

said slot extends in said annular direction, is closed by two ends in said annular direction, and is open between two side was to define a through opening extending between said two side was in said transverse direction, perpendicular to said annular direction, and

each opposite female element comprises a side hole whose axis extends in a direction parallel to said transverse direction and a pin that extends through said hole and said through opening of the slot of the opposite male element, to restrict the movement of the first portion and the second portion of each link away from each other in the annular direction.

8. The extensible bracelet as claimed in claim **7**, wherein:

each opposite female element has an annular opening whose axis extends in said annular direction and which is configured to allow the opposite male element to extend therethrough, and a cavity configured to receive said opposite male element, and

said side hole is disposed proximate to said annular opening.

9. The extensible bracelet as claimed in claim **8**, wherein each opposite male element creates a form fit with the respective opposite female element, such that the opposite female element will guide the movement of the opposite male element through the annular opening and into the cavity.

10. The extensible bracelet as claimed in claim **1**, wherein each link is made of metal, preferably a precious metal such as gold, silver, platinum.

* * * * *