Nov. 28, 1939. F. READE 2,181,521

LIQUID DISPENSING DISPENSER

Filed Dec. 8, 1938

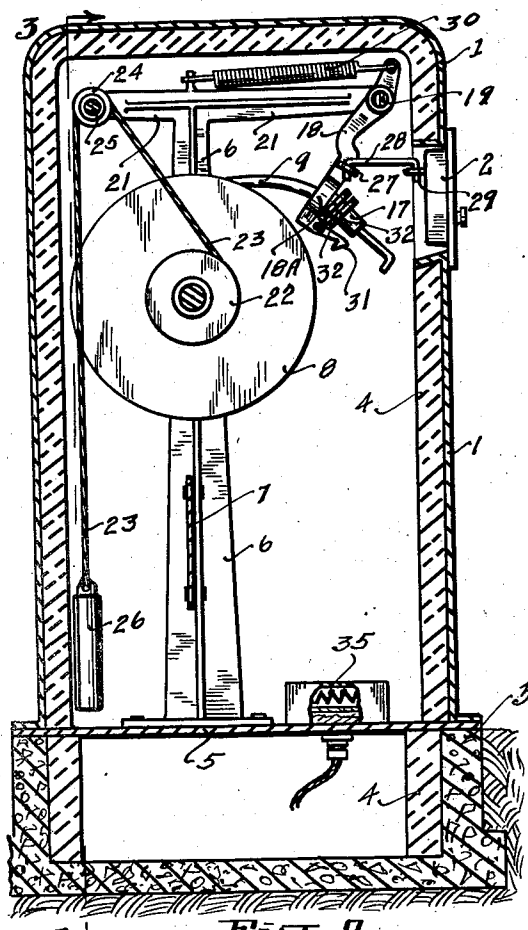

Fig. 2

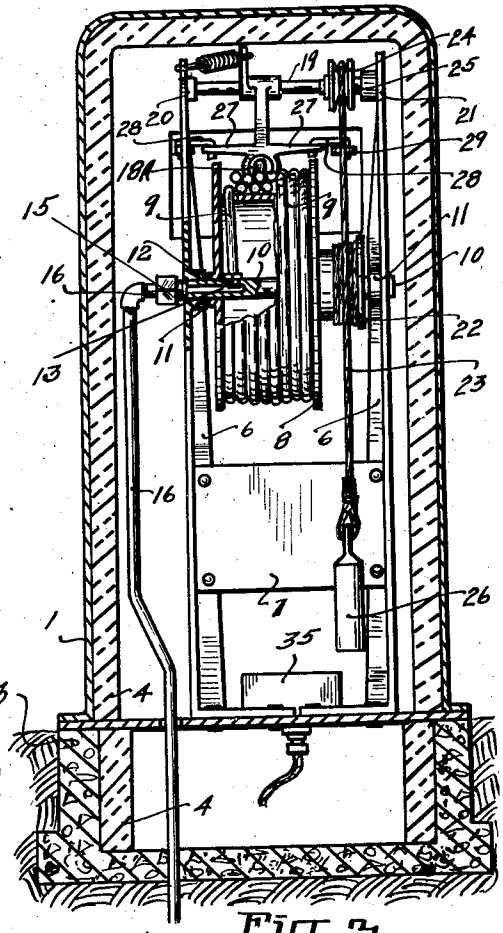

Fig. 3

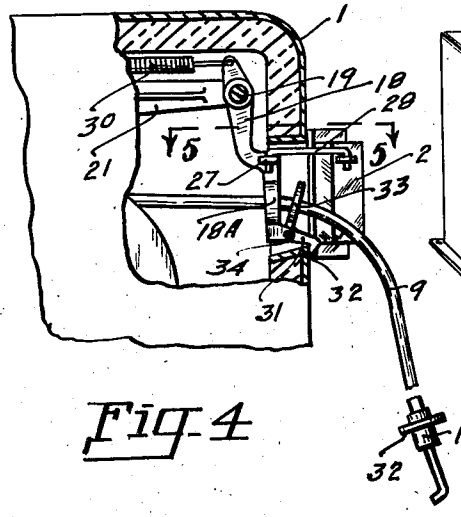

Fig. 4

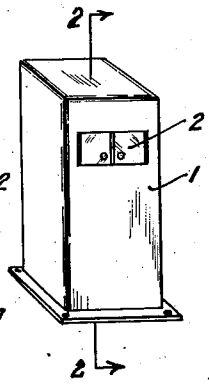

Fig. 1

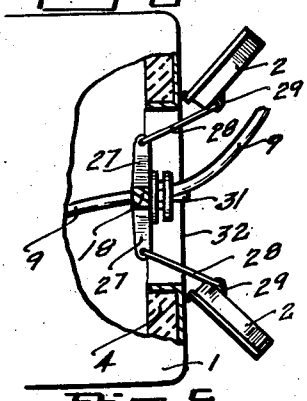

Fig. 5

INVENTOR.
Frank Reade
BY
ATTORNEY.

Patented Nov. 28, 1939

2,181,521

UNITED STATES PATENT OFFICE

2,181,521

LIQUID DISPENSING DISPENSER

Frank Reade, Klamath Falls, Oreg.

Application December 8, 1938, Serial No. 244,665

7 Claims. (Cl. 221—95)

This invention relates to liquid dispensing dispensers and is particularly adapted for dispensing water at service stations.

The primary object of the invention is to provide a dispensing cabinet for holding the water hose that will prevent the freezing of the water within the hose line.

Another object of my invention is to provide a reel within a cabinet that will automatically reel up the hose line at the same time close the opening of the cabinet where the hose passes through.

Still another object of my invention is to provide a liquid dispensing cabinet that is insulated and heated within to prevent freezing of the mechanism contained therein, which includes the reel for reeling in the hose and the hose.

These and other incidental objects will appear in the specification, drawing and claims to follow:

Referring to the drawing:

Figure 1 is a perspective front view of a liquid dispensing cabinet.

Figure 2 is a sectional view, taken on line 2—2 of Figure 1, looking in the direction indicated.

Figure 3 is a sectional view, taken on line 3—3 of Figure 1.

Figure 4 is a fragmentary sectional view of the dispensing hose and mechanism for opening and closing the doors of the cabinet, the same being shown in open position.

Figure 5 is a fragmentary plan view, parts broken away, of the mechanism shown in Figure 4.

In the drawing:

1 is the liquid dispensing cabinet having doors or openings 2; this cabinet is mounted upon a suitable base, such as concrete 3. The inside of the cabinet 1 and the base 3 is lined with insulation 4, this provides a cabinet that can be heated within, losing but little of the heat value through the cabinet walls, which is one of the primary objects of my invention.

A base plate 5 is provided within the cabinet for supporting upright frames 6, the frames 6 are tied together by web 7. A reel 8, for reeling the hose line 9, is fixedly mounted upon the cross shaft 10, said cross shaft is journaled within bearings 11 of the upright supports 6. The inner end 12 of the hose 9 is tapped into the shaft 10 within the reel, best shown in Figure 3. The shaft 10 is hollow, as indicated at 13, terminating in a stuffing box 15. Within the stuffing box 15 is inserted the liquid dispensing pipe 16, which leads from any suitable source of supply, the liquid being supplied by the pipe 16 through the stuffing box 15, the cored out portion 13 of the shaft 10 into the hose line 9, through the nipple 12. The end of the hose line terminates in the usual fitting 17, as commonly used today.

A pivotally mounted arm 18 is mounted to the cross shaft 19, the cross shaft 19 is journaled to the bearings 20 of the upper part of the frame 21, which forms the upper part of the upright supports 6. A shive 22 is fixedly mounted to the side of the reel 8 and has a cable 23 secured and wrapped thereabout. This cable is trained over the pulley 24, journaled to the stub shaft 25, which is mounted to the frame 21. A counterweight 26 is secured to the opposite end of the cable 23 and tends to reel in on the hose line 9 by revolving the reel 8. A double cross arm 27 forms part of the pivotally mounted arm 18. A link 28 has one of its ends connected to the outer end of the cross arm 27 and its opposite end connected to lugs 29 of the doors 2.

When the doors 2 are opened and the nozzle 17 grasped by the operator and pulled out of the door opening the arm 18 is brought to the position shown in Figure 4 by the opening of the doors 2 and by the spring 30, the arm remaining in this position until the time the hose 17 is released and reeled back by the action of the counterweight 26 and the reel 8.

The outer end 18A of the arm 18 is formed circular allowing the hose 9 to pass through, providing a guide for the hose. The arm 18 is held in the position shown in Figure 4 by the latch 31 catching the corner 32 of the door opening, but when the end 17 of the hose is released the collar 32 strikes the face of the ring 33, which is part of the latch 31, which is pivotally mounted at 34; this raises the latch 31 from the edge 32 of the opening, permitting a tension exerted on the hose by the reel 8 to pull the arm 18 against the spring tension 30 to the position shown in Figure 2, at the same time the links 28 pull the doors 2 to closed position. Herein is an important feature of my invention.

In order to keep the inside of the cabinet from freezing it becomes necessary to close the opening automatically when the operator releases the hose. The inside of the cabinet is kept at a proper temperature to prevent freezing by a suitable heating element, such as an electrical heater 35.

In the operation of my new and improved liquid dispenser the doors 2 are pulled open, which pulls the arm 18 to the position shown in Figure 4, by the action of the links 28, the end 17 of the hose then grasped and taken to the desired destination, the latch 31 holding the arm

18 in this position. When the hose is released the reel reels the same in until the collar 32 strikes the ring 33 unlatching the latch 31 and pulling the arm 18 to the position shown in Figure 2, at the same time the links 28 close the doors 2. This completes a complete cycle of operation of my new and improved liquid dispenser.

I do not wish to be limited to this particular form of construction, as other forms of mechanical embodiment could be employed, still coming within the scope of the claims to follow.

What is claimed to be new is:

1. A fluid delivery apparatus including a cabinet formed with an opening, a door mounted to close the opening, a hose reel mounted in the cabinet, a hose wound on the reel in position to permit the delivery end of the hose to be passed through the opening, means for operating the reel in a direction to wind the hose, a source of fluid delivery in communication with the hose, and means for locking the door in open position during the projection of the hose through the opening.

2. A construction as defined in claim 1, including means for releasing the lock and automatically closing the door as the operative end of the hose is withdrawn within the cabinet.

3. A fluid delivery apparatus including a cabinet formed with an opening, a door for closing the opening, a reel mounted in the cabinet, a hose coiled on the reel and in communication with a supply of fluid, means for automatically operating the reel to wind the hose thereon, a door control frame pivoted in the cabinet, a connection between the frame and the door, the operative end of the hose being passed through the frame, a latch on the frame to engage the edge of the door opening and hold the door open while the hose is projected through the opening, and means on the operative end of the hose to actuate the latch to release position as the operative end of the hose is withdrawn within the cabinet by the means for automatically actuating the reel.

4. A construction as defined in claim 3, wherein the latch is provided with an upstanding element to actuate the latch and the operative end of the hose provided with a cooperating element to engage the latch actuating element to release the latch as the operative end of the hose is withdrawn within the opening.

5. A construction as defined in claim 3, inculding means to operate the frame to automatically close the door as the operative end of the hose is withdrawn within the cabinet.

6. A construction as defined in claim 3, including a spring for operating the frame as the doors are opened to a position to cause the latch to engage the cabinet.

7. A construction as defined in claim 3, wherein the cabinet is heat insulated and wherein the heating means are provided within the cabinet.

FRANK READE.