United States Patent

Owens

[15] 3,666,011

[45] May 30, 1972

[54] APPARATUS FOR PLUGGING WELL BORES WITH HARDENABLE FLUENT SUBSTANCES

[72] Inventor: **Nevyl G. Owens**, Houston, Tex.

[73] Assignee: **Schlumberger Technology Corporation**, New York, N.Y.

[22] Filed: **Nov. 13, 1970**

[21] Appl. No.: **89,332**

[52] **U.S. Cl.** **166/187**

[51] **Int. Cl.** **E21b 33/127**

[58] **Field of Search** 166/187, 285, 290, 315, 212

[56] **References Cited**

UNITED STATES PATENTS

3,578,083	5/1971	Anderson	166/187
3,460,618	8/1969	Blagg	166/187
3,460,624	8/1969	Aitken et al.	166/187
3,460,625	8/1969	Hart et al.	166/187
3,578,079	5/1971	Alexander	166/187

Primary Examiner—James A. Leppink

Attorney—Ernest R. Archambeau, Jr., Stewart F. Moore, David L. Moseley, Edward M. Roney and William R. Sherman

[57] **ABSTRACT**

As a preferred embodiment of the invention disclosed herein, a tubular bag sealingly mounted around an elongated body is operatively arranged to be expanded into engagement with the walls of a well bore by discharging thereinto an initially fluent hardenable substance contained in a selectively operable displacement assembly releasably coupled to the body. Biasing means are uniquely arranged for initially retaining the bag in a collapsed position along the body and then selectively imposing opposed axial forces against the expanded bag to depress the ends of the bag inwardly. In this manner, the biasing means functions further to utilize the unbalanced pressure forces acting on the tool for urging the bag outwardly into anchoring engagement with the well bore wall as the fluent substance solidifies.

12 Claims, 8 Drawing Figures

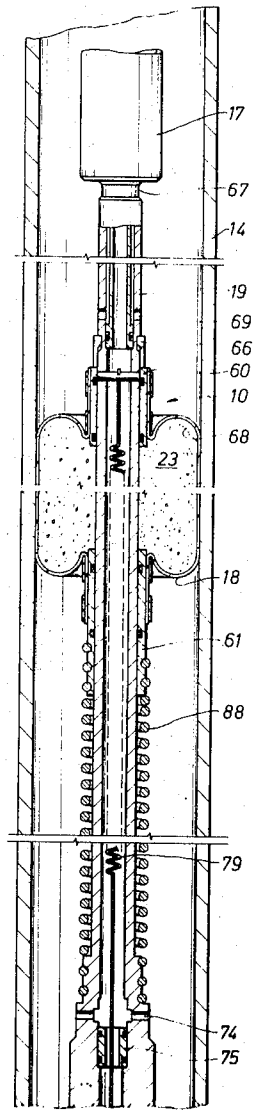

FIG. 5

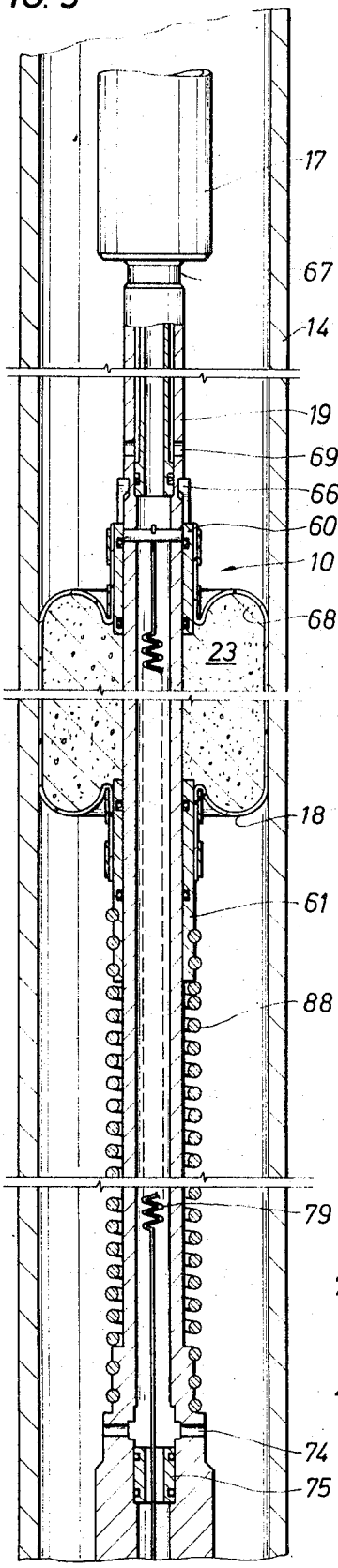

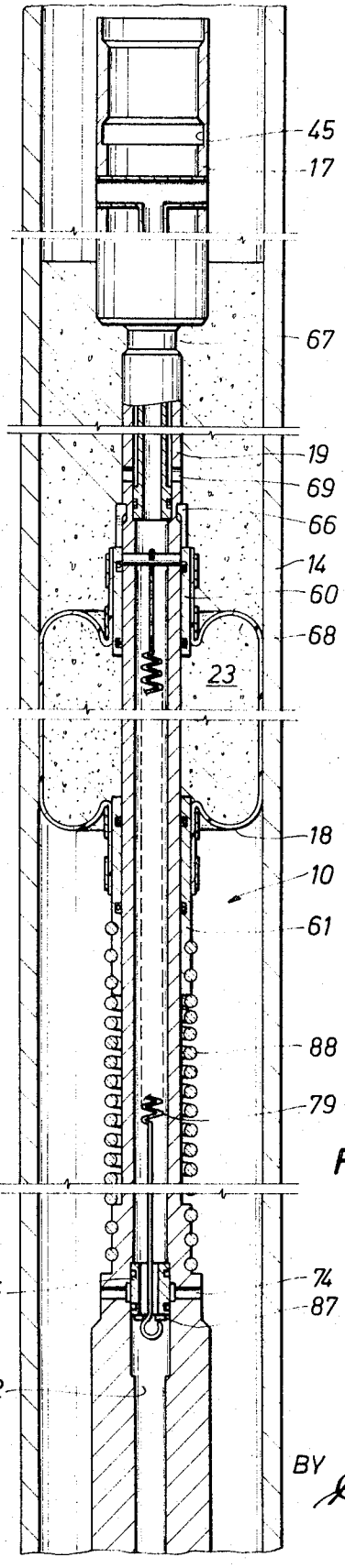

FIG. 6

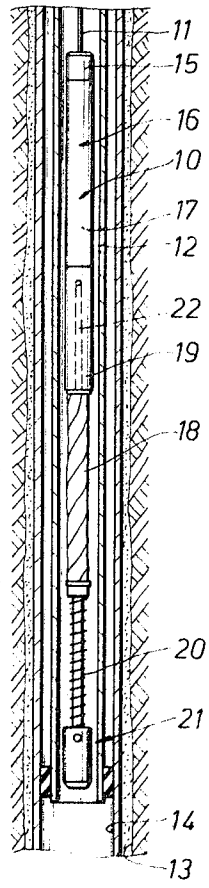

FIG. 1

Nevyl G. Owens
INVENTOR

BY E. K. Archambeau Jr.

ATTORNEY

FIG. 2A

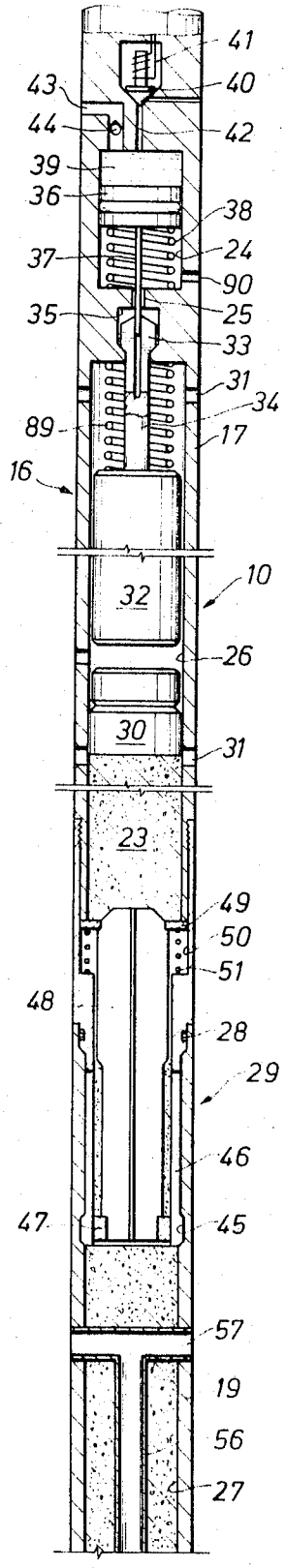

FIG. 2B

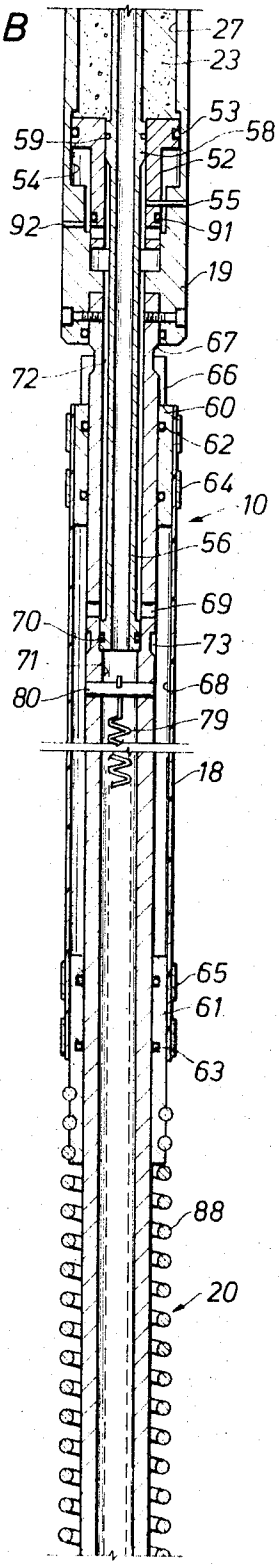

FIG. 2C

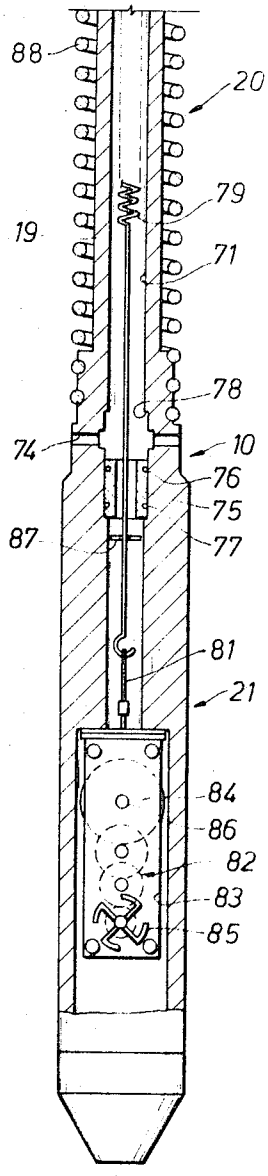

Nevyl G. Owens
INVENTOR

BY E. K. Archambeau Jr.

ATTORNEY

FIG. 3

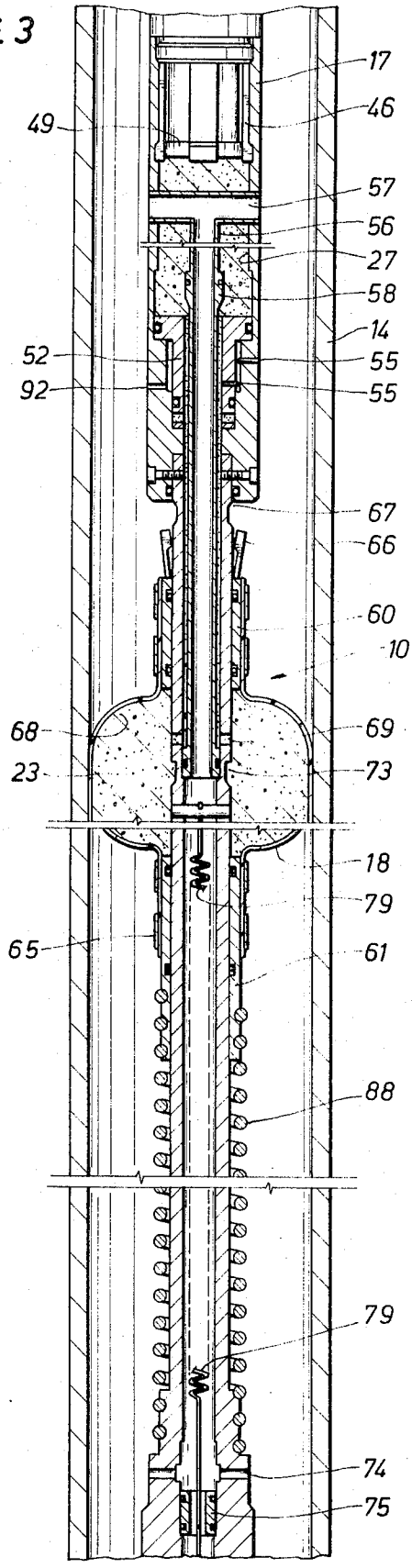

FIG. 4

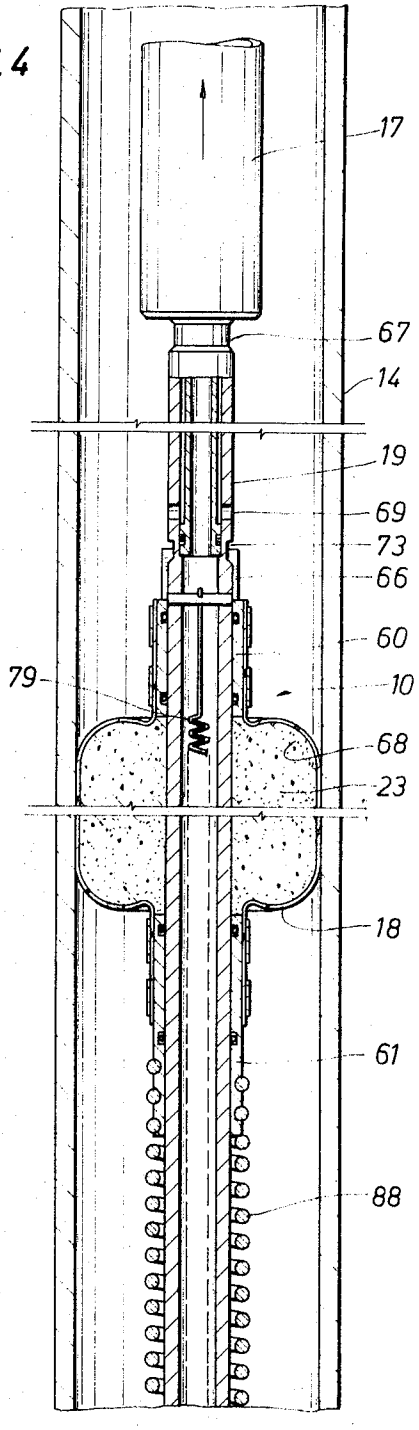

Nevyl G. Owens
INVENTOR

BY E. R. Archambeau Jr.
ATTORNEY

APPARATUS FOR PLUGGING WELL BORES WITH HARDENABLE FLUENT SUBSTANCES

In various well-completion operations it is often desired to place a fluid-tight barrier or plug at a desired location in a well bore below the lower end of a substantially smaller well pipe or tubing string. It will, of course, be appreciated that conventional bridge plugs which are small enough to pass through a small-diameter tubing string are incapable of being expanded to a diameter equal to that of the well bore which may be two to five times greater than the tubing diameter. Accordingly, so-called "through-tubing bridge plugs" such as those shown in U.S. Pat. Nos. 3,460,618, 3,460,624 and 3,460,625 are typically employed for situations of this nature.

As illustrated in these patents, such through-tubing bridge plugs generally include a fluid-displacement device that is supported by a suspension cable and releasably coupled to an elongated body member therebelow carrying an expansible tubular bag that is initially retained in a collapsed position. Once the tool has passed through a reduced-diameter tubing string and is in the enlarged well bore below the lower end of the tubing string, a fluent substance such as a hardenable plastic or cementitious composition is selectively discharged from the displacement device into the expansible bag so as to firmly expand the bag into sealing contact with the walls of the well bore. Thereafter, once the hardenable substance within the expanded bag has hardened, the well bore will be tightly plugged so as to prevent fluid or pressure communication between the well bore intervals above and below this barrier.

It will, of course, be appreciated that until the fluent substance has completely hardened, the bag and at least the lower portions of the tool carrying the expanded bag must be secured against movement upwardly or downwardly in the well bore. Accordingly, as described in the aforementioned patents, a fluid bypass passage is typically provided through each tool for equalizing the pressures above and below the expanded bag as well as for accommodating at least a substantial vertical movement of any well bore fluids during the time that the fluent material is hardening. After the fluent substance has hardened, this bypass passage is permanently closed to complete the installation of the fluid-tight well bore barrier. In some instances, these through-tubing bridge plugs are also provided with selectively extendible wall-engaging anchors such as those shown in the aforementioned U.S. Pat. No. 3,460,624 and U.S. Pat. No. 3,460,625. In this manner, upon operation of the tool, these wall-engaging anchors will securely anchor the tools against longitudinal movement in the well bore until the fluent substance has fully hardened.

Although these well-completion tools have met with considerable commercial success, the problem of securing the tools in the well bore while the fluent substance hardens is still not adequately solved. For instance, those skilled in the art will appreciate that with those tools having extendible anchors, should it subsequently become necessary to remove the bridge, the typical drilling-out operations will be further complicated by the presence of these anchoring members which are usually formed of iron or steel. Similarly, should some malfunction prevent the expansible bag from fully expanding into sealing engagement with the walls of the well bore, the subsequent removal of the tool will be complicated by the extended anchors. On the other hand, with tools not having wall-engaging anchors (such as the tools shown in U.S. Pat. No. 3,460,618), it will be recognized that the bypass passage through the tool may be too small to accommodate a substantial movement of fluids in the well bore; and, as a result, the attendant pressure differential will tend to shift the tool before the fluent substance in the expanded bag has fully hardened. Thus, with tools of this nature, the fluid-displacement device is usually not uncoupled from the lower portion of the tool until the fluent substance has hardened. This, of course, will require that the surface equipment be left in position for a considerable time if it is necessary to be certain that the tool is not shifted from its intended location in the well bore.

It will also be recognized that the expansible bags typically used for these tools are subjected to damage as the tools are being moved through the tubing string. Thus, it has been customary heretofore to releasably secure these bags on the tool body to hopefully maintain them in a fully collapsed position until the bag is expanded. Those skilled in the art will appreciate, however, that if the ties releasably securing the bag to the body are broken as the tool is moved through the tubing string, the bag may be torn or otherwise damaged should it subsequently be caught on a projection in the tubing string.

Accordingly, it is an object of the present invention to provide a new and improved through-tubing bridge plug having an expansible bag which is initially retained in a contracted position by biasing means before it is selectively expanded by the biasing means for securely anchoring the tool in a well bore until an initially fluent hardenable substance in the bag is hardened.

This and other objects of the present invention are attained by arranging a tubular bag around a body with the ends of the bag fluidly sealed thereto and at least one end thereof adapted for longitudinal movement along the body toward the other end of the bag. Means are provided for filling the interior of the bag with an initially fluent hardenable substance to expand it outwardly into contact with the adjacent well bore walls. Selectively operable biasing means are further provided for initially retaining the bag collapsed along the body and then, upon expansion of the bag, cooperatively imposing an axial force against the one bag for moving the bag ends toward one another to form the expanded bag into a generally toroidal configuration so that unbalanced pressure forces acting on the bag will be effective for securely anchoring the apparatus in the well bore as the fluent substance is hardening into a solidified mass.

The novel features of the present invention are set forth with particularity in the appended claims. The invention, together with further objects and advantages thereof, may be best understood by way of the following description of exemplary apparatus employing the principles of the invention as illustrated in the accompanying drawings, in which:

FIG. **1** depicts a preferred embodiment of a well-completion tool arranged in accordance with the principles of the present invention as the tool is being lowered through a tubing string to a desired location in a well bore;

FIGS. **2A–2C** are successive cross-sectional elevational views of the tool depicted in FIG. **1** illustrating the initial positions of the various elements thereof before the tool has been actuated; and

FIGS. **3–6** successively depict the tool shown in FIG. **1** as it is being operated.

Turning now to FIG. **1**, a well-completion tool **10** incorporating the principles of the present invention and dependently supported by a suspension cable **11** is depicted as it is being lowered through a string of tubing **12** toward a selected position below the lower end of the tubing string within a larger-diameter well bore **13** which, in this instance, is cased as at **14**. If desired, a typical casing collar locator **15** may be incorporated with the tool **10** for determining the depth at which the tool is to be halted.

In the preferred embodiment depicted, the well-completion tool **10** includes selectively operable fluid-displacement means **16** arranged in an upper section **17** thereof and carrying a supply of an initially fluent hardenable material which, upon command from the surface, is selectively displaced into an expansible tubular bag **18** carried on an elongated body **19** detachably mounted below the upper section. As will subsequently be explained in detail, biasing means **20** carried on the body **19** are uniquely arranged for initially retaining the bag **18** in a collapsed position until the tool **10** is to be set. Then, the new and improved biasing means **20** cooperate in response to operation of the tool **10** to impose opposed axial forces against the ends of the expanded bag **18** for forming it into a toroidal shape. The upper section **17** of the tool is subsequently released from the lower body **19** and returned to the

surface. Thereafter, once sufficient time has elapsed for the fluent substance to adequately harden so as to form an impermeable bridge plugging the well casing **14**, valve means **21** mounted on the lower end of the body **19** are operatively arranged for closing a bypass passage **22** provided through the body for reducing or, hopefully, equalizing pressure differentials acting across the inflated bag **18** as the fluent substance therein is hardening.

Turning now to FIGS. 2A–2C, a cross-sectioned elevational view is shown of the well-completion tool **10** as it appears before the collapsed bag **18** carried thereon is expanded. As depicted, the upper section **17** of the tool **10** is operatively arranged for carrying a substantial volume of an initially fluent, hardenable substance **23** which, upon operation of the selectively operable fluid-displacement means **16**, is forcibly displaced into the tubular bag **18** to expand it outwardly into sealing engagement with the well casing **14**. Accordingly, as depicted in FIG. 2A, the upper housing section **17** of the tool **10** is arranged to provide an enlarged chamber **24** in its upper portion that is joined by an axial passage **25** to an enlarged-diameter longitudinal bore **26** extending substantially the full length of the housing section and terminating at its lower end. The upper portion of the elongated body **19** is also enlarged and similarly provided with an enlarged-diameter longitudinal bore **27** which extends upwardly to the upper end of the body. The opposed ends of the housing **17** and the body **19** are complementally fitted together and fluidly sealed as at **28**, with the two members being releasably coupled to one another by latching means **29** with their respective enlarged bores **26** and **27** defining a fluid chamber of substantial length and volumetric capacity.

The fluid-displacement means **16** further include a piston **30** operatively arranged in the fluid chamber so as to be initially positioned just above the upper surface of the initially fluent substance **23** disposed in the intercommunicated bores **26** and **27** defining the fluid chamber. In this manner, upon downward movement of the piston **30**, the fluent substance **23** will be forcibly displaced downwardly from the longitudinal bores **26** and **27** and into the expansible bag **18** mounted on the body **19** therebelow. Lateral ports, as at **31**, are provided in the housing section **17** for admitting well bore fluids into the longitudinal housing bore **26** so as to maintain the space above the piston **30** as well as the fluent substance **23** in the fluid chamber at the hydrostatic pressure in the well bore.

In the preferred manner of moving the displacement piston **30** downwardly, the fluid-displacement means **16** further include a cylindrical weight **32** initially disposed in the enlarged bore **26** immediately above the piston and releasably supported therein by means such as two or more upwardly extending, inwardly biased latch fingers **33** arranged on an upright rod **34** on the upper end of the weight. As illustrated in FIG. 2A, the latch fingers **33** have laterally opposed, outwardly enlarged heads which are adapted to be received in an enlarged portion **35** of the axial housing passage **25** immediately above the upper end of the enlarged-diameter longitudinal bore **26**. In this manner, so long as the latch fingers **33** are laterally separated, their respective enlarged heads are supported on the upwardly directed shoulder or face at the lower end of the recess **35**. To retain the latch fingers **33** initially separated from one another, an actuating piston **36** is disposed in the enlarged chamber **24** and coupled to a depending axial rod **37** which extends through the axial passage **25** into the enlarged recess **35** so as to be interposed between the opposed enlarged heads of the latch fingers **33** so long as the actuating piston is not further elevated by a compression spring **38** mounted within the enlarged chamber.

To retain the actuating piston **36** in its initial position illustrated in FIG. 2A, the upper portion of the chamber **24** is initially filled by a relatively non-compressible fluid **39** such as water or oil; and this fluid is retained therein until a normally closed solenoid valve **40** connected to suitable electrical conductors **41** in the cable **11** is operated to open communication by way of a fluid passage **42** between the enlarged chamber and the exterior of the tool **10**. A fluid passage **43** is provided for filling the chamber **24**, with communication in the reverse direction through the filling passage being prevented by means of a ball check valve **44**. Accordingly, it will be appreciated from FIG. 2A that once the chamber **24** has been filled with a sufficient volume of the fluid **39** to shift the actuating piston **36** downwardly to its illustrated position, the depending rod **37** thereon will be positioned between the opposed enlarged heads of the fingers **33** for maintaining the weighted body suspended just above the displacement piston **30**.

In the preferred manner of arranging the latching means **29**, the lower end of the housing section **17** is adapted to be complementally received within the upper end of the enlarged longitudinal bore **27** in the elongated body **19**. An inwardly opening circumferential groove **45** is formed around the wall of the internal bore **27** and adapted for receiving outwardly enlarged heads on the lower ends of two or more yieldable latch fingers **46** dependently coupled to the lower end of the upper housing section **17**. A ring **47** is normally positioned in the longitudinal bore **27** to the rear of the latch fingers **46** and suitably dimensioned to retain their enlarged heads within the circumferential groove **45** until the ring is shifted downwardly in relation to the heads. To retain the ring **47** in its depicted elevated position, an upstanding support **48** is coupled thereto and extended upwardly into the lower end of the housing section **17** thereabove. An annular plate **49** is mounted around the upper end of the support **48** and slidably arranged within an inwardly facing recess **50** within the bore **26** and supported therein by a spring **51** which normally urges the annular plate upwardly against the downwardly facing surface at the top of the recess.

In this manner, so long as the annular plate **49** is elevated as depicted in FIG. 2A, the latch ring **47** is engaged with the reverse side of the enlarged heads of the latch fingers **46** to releasably retain the heads within the circumferential housing groove **45** for securely latching the tool sections **17** and **19** together. It will be appreciated, however, that upon downward travel of the displacement piston **30** through the enlarged housing bore **26**, the piston will ultimately contact the annular plate **49** and shift it downwardly a sufficient distance to displace the latch ring **47** below the latch fingers **46** so as to permit the upper tool section **17** to be uncoupled from the elongated body **19** by simply pulling on the suspension cable **11**.

To initially retain the fluent substance **23** within the longitudinal bores **26** and **27**, the lower end of the enlarged body bore is normally closed by valve means such as an annular valve element **52** that is slidably arranged and fluidly sealed, as at **53**, within an enlarged chamber **54** formed in the body **19** immediately below the lower end of the enlarged body bore **27**. To normally secure the valve member **52** in its depicted elevated position, means such as a shear pin **55** are provided for releasably retaining the valve member to the elongated body **19** until the fluid pressure of the fluent substance **23** has been increased sufficiently to break the shear pin and shift the valve member downwardly.

For reasons that will subsequently become apparent, the upper portion of the bypass passage **22** is provided by an elongated tubular member **56** which is coaxially supported within the elongated body bore **27** and terminated at its upper end by one or more lateral outlets **57** providing communication with the exterior of the tool **10**. By providing an enlarged-diameter portion **58** on the tubular member **56** immediately adjacent to the normal elevated position of the valve member **52** and arranging a sealing member **59** thereon for engagement within the axial bore of the annular valve member, the fluent substance **23** cannot be displaced from the longitudinal bore **27** until the annular valve member has moved downwardly a sufficient distance to bring its upper end below the sealing member **59**.

The intermediate tubular portion of the elongated body **19** is sufficiently reduced in diameter to accommodate a pair of longitudinally spaced collars **60** and **61** which are respectively slidably mounted and fluidly sealed, as at **62** and **63**, around the reduced-diameter portion of the body and secured, as by

bands 64 and 65, within the opposite ends of the elongated tubular bag 18 which is preferably formed of a suitable wear-resistant, flexible and fluid-impervious material, such as a Dacron cloth impregnated with Neoprene, that does not readily stretch. The bag 18 is, therefore, formed with an expanded diameter corresponding generally to that of the well casing 14; and, preferably, folded around the intermediate portion of the body 19 in such a manner as to minimize its lateral dimensions and, if desired, lightly tied in its folded or collapsed position by string or tape. In its initially collapsed position illustrated in FIG. 2B, the tubular bag 18 is drawn to its full length with the slidable collars 60 and 61 at their most-widely separated positions along the body 19; and the upper collar is releasably secured in its initial position by means such as one or more upright latch fingers 66 which are inwardly biased to retain enlarged heads thereon in a circumferential groove 67 around the body.

It will be noted that by virtue of the sealing members 62 and 63 on the slidable collars 60 and 61, the interior of the bag 18 defines a fluid-tight space 68 around the intermediate portion of the body 19. Accordingly, to provide communication into the fluid-tight space 68 within the collapsed bag 18, one or more lateral ports 69 are provided in the reduced-diameter portion of the body 19 at a location between the depicted elevated position of the upper collar 60 and the lower position to which the collar will slide downwardly when the bag 18 is initially expanded. The lower end of the elongated tubular member 56 is extended below the ports 69 and sealingly engaged, as at 70, within the longitudinal bore 71 through the tubular portion of the body 19. Thus, so long as the upper collar 60 is retained in its initial elevated position by the latch fingers 66, once the valve member 52 is shifted downwardly, the fluent substance 23 released from the longitudinal bore 27 will be directed through the annular space 72 around the lower portion of the tubular member 56 and into the bag 18 by way of the lateral ports 69.

It will, of course, be appreciated that once the upper collar 60 has been carried downwardly (as will subsequently be described) a sufficient distance to position the sealing member 62 on the collar below the lateral ports 69, the fluent substance 23 discharged into the interior space 68 of the expanded bag 18 will be trapped therein. For reasons that will subsequently be explained, a second circumferential groove 73 is formed around the reduced-diameter portion of the body 19 just below the lateral ports 69 so that,once the collar 60 has shifted downwardly in relation to the ports, the enlarged heads on the latch fingers 66 will engage the lower circumferential groove to prevent the upper collar from moving upwardly from its lower position.

As previously mentioned, the normally open bypass passage 22 is provided for reducing, if not altogether, equalizing pressure differentials existing across the expanded bag 18 as the fluent substance 23 therein is hardening. Accordingly, one or more lateral ports 74 are formed in the tool body 19 well below the depicted initial position of the lower collar 61. In this manner, the bypass passage 22 between the upper and lower ports 57 and 74 is defined by the tubular member 56 and the central portion of the longitudinal body bore 71 below the lower end of the tubular member. To selectively close the bypass passage 22, the valve means 21 include a tubular valve member 75 having longitudinally spaced sealing members 76 and 77 thereon and which is operatively arranged within the longitudinal body bore 71 for movement upwardly from an initial position immediately below the lateral ports 74 to a final elevated position (as defined by a downwardly facing shoulder 78 in the longitudinal bore) where the valve member is adjacent to the lateral ports with its sealing members respectively spanning the ports and sealingly engaged with the body 19 above and below the ports. Thus, in its initial position, fluid communication is readily provided through the tubular member 56 and the ports 57 and 74 for accommodating at least a substantial proportion of any well bore fluids moving upwardly or downwardly past the well-completion tool 10 during the time that the fluent substance 23 is hardening within the expanded bag 18.

In the preferred manner of selectively closing the valve member 75, the upper end of an elongated tension spring 79 is anchored, as by a transverse rod 80, to the intermediate portion of the body 19 and the spring extended downwardly therefrom through the longitudinal body bore 71. The spring 79 is passed through the valve member 75 and retained in an initially stretched condition by coupling the lower end of the spring to a wire or cord 81 that is releasably secured to a geared timing mechanism 82 enclosed in an enlarged fluid-filled chamber 83 in the lower portion of the body 19.

In one manner of arranging the timing mechanism 82, the rotational speed of the uppermost gear 84 thereof is regulated by a train of gears that is terminated by either a typical escapement and balance or a paddle-like wheel member 85 that is driven by the force of the spring 79 acting through the gear train. Thus, by releasably coupling the cord 81 to the shaft 86 carrying the upper gear 84 of the gear train and winding the cord therearound, the tension force of the spring 79 will be effective for slowly rotating this uppermost gear at a speed which, by virtue of the gear train, is regulated by the faster, but retarded, rotational speed of the rotating paddle member 85 in the viscous fluid filling the chamber 83.

Accordingly, once the cord 81 is wound around the shaft 86 and coupled to the lower end of the spring 79, a preselected time interval will be provided before a washer 87 loosely mounted on the straight portion of the spring is moved upwardly to shift the tubular valve member 75 upwardly to close the ports 74. In other words, once the cord 81 is connected, the tension force of the spring 79 will begin slowly unwinding the cord from the shaft 86 so that, once the gear 84 has been rotated a sufficient number of revolutions to unwrap the cord therefrom, the lower end of the cord will be released from the shaft and the spring will then jerk the washer 87 upwardly to carry the valve member 75 into its final port-closing position.

In the preferred manner of arranging the biasing means 20, a stout coil spring 88 is coaxially arranged around the body 19 and its upper and lower ends are respectively coupled to the lower collar 61 and the lower portion of the body 19. The coil spring 88 is cooperatively sized so that so long as the latch fingers 66 are engaged within the groove 67, the spring will be tensioned for imposing a downwardly acting force on the lower collar 61 which is calculated to be sufficient for releasably retaining the bag 18 in the collapsed position illustrated in FIGS. 2B and 2C as the tool 10 is being lowered through the tubing string 12. If desired the collapsed bag 18 can also be twisted in relation to the body 19 so as to initially arrange the bag in a spiraled pleated configuration along the body.

Accordingly, to prepare the well-completion tool 10 of the present invention for operation, the control chamber 24 above the weight-releasing piston 36 is filled with a sufficient volume of the hydraulic fluid 39 to shift the piston against the spring 38 to a position where the depending rod 37 extends downwardly into the recess 35. The weighted body 32 is forced upwardly, compressing a coil spring 89 thereabove until the enlarged heads of the latch fingers 33 are within the recess 35 on opposite sides of the lower end of the rod 37 and are supported on the shoulder at the bottom of the recess for retaining the weighted body 32 in its elevated position above the fluid-displacement piston 30. The lower end of the upper housing 17 is complementally fitted into the upper end of the upper portion of the elongated body 19 and the latch ring 47 is properly positioned to retain the enlarged heads of the latch fingers 46 in the internal circumferential groove 45. The annular valve member 52 is secured in its upper or closed position by the shear pin 55, and the enclosed fluid chamber defined by the bores 26 and 27 is then filled with a suitable plastic or cementitious initially fluent substance 23 which will harden into a solid mass that preferably expands slightly as it fully hardens.

The bag 18 is folded and arranged along the intermediate portion of the body 19 so as to position the latch fingers 66 in

the groove 67 and initially stretch the coil spring 88 in a tensioned condition. The tension spring 79 is extended and connected to the release cord 81 which has been wrapped several turns around the shaft 86 of the upper gear 84 of the timing mechanism 82. As previously mentioned, the predetermined delay before the bypass passage 22 is closed is determined by the number of turns or wraps of the cord 81 around the shaft 86. This time interval is, of course, selected so that the valve member 75 will not be actuated until some time later which is calculated to be sufficient to permit the initially fluent substance 23 to have at least substantially hardened in the expanded bag 18.

The tool 10 is then lowered downwardly into the well bore 13 by means of the suspension cable 11. It will be appreciated that by virtue of the initially tensioned spring 88, should the lower collar 61 or the bag 18 engage a projection or the like as the tool 10 is being lowered through the tubing string 12, the spring 88 will be further tensioned to assure that the bag is restored to its fully collapsed position along the body 19. Those skilled in the art will recognize, therefore, that the lower portion of the bag 18 cannot be doubled back over the upper portion of the bag since the further tensioning of the spring 88 will be effective for pulling the lower collar 61 back to its initial position once the tool 10 has passed an obstruction in the well bore 13.

Once the well-completion tool 10 has emerged from the lower end of the tubing string 12 and has reached a selected position therebelow, an electrical signal is sent through the cable conductor 41 to actuate the solenoid valve 40. As previously explained, once the solenoid valve 40 is opened, the hydraulic fluid 39 within the upper chamber 24 will be displaced therefrom through the now-opened passage 42 as the compression spring 38 forcibly shifts the weight-releasing piston 36 upwardly. It will be appreciated, of course, that by providing a lateral port 90 in the lower portion of the chamber 24, the weight-releasing piston 36 will be moved upwardly without restraint from any unbalanced pressure forces that would otherwise occur upon opening of the solenoid valve 40 to open the enclosed chamber 24 to the well bore fluids. Once the weight-releasing piston 36 has reached a sufficiently elevated position to withdraw the depending rod 37 from between the opposed ends of the latch fingers 33, the weighted body 32 will be released.

Once the body 32 is released, the force of the compressed spring 89 is effective for accelerating the weighted body downwardly so that it strikes the fluid-displacement piston 30 with considerable impact. In this manner, a substantial shock or pressure wave is developed in the fluent substance 23 which is effective for shifting the annular valve member 52 downwardly with sufficient force to break the shear pin 55. Once the shear pin 55 has failed, the valve member 52 will be moved downwardly a sufficient distance to bring the upper end of the valve member below the seal 59 on the enlarged-diameter portion of the axial tubular member 56 to open communication between the longitudinal bores 26 and 27 and the filling ports 69 by way of the annular space 72 between the axial tubular member and the inner wall of the intermediate portion of the elongated body 19. A sealing member 91 is arranged on the lower end of the valve member 52 for sealing engagement with the lower portion of the enlarged chamber 54 and prevent loss of the fluent substance 23 through a pressure-equalizing port 92 provided into the chamber below the upper sealing member 53.

Once the weighted body 32 has come to rest on top of the fluid-displacement piston 30, the weight of the body will be effective for moving the piston on downwardly through the longitudinal bore 26 to forcibly displace the fluent substance 23 therefrom through the filling ports 69 and into the interior space 68 within the expansible bag 18. It will, of course, be appreciated that since the fluent substance 23 is initially at the hydrostatic pressure of the well bore fluids, the pressure developed by the weighted body 32 will be in addition to the hydrostatic pressure. Thus, as the bag 18 is filling, the increased fluid pressure developed in the fluent substance 23 by the weighted body 32 acting on the displacement piston 30 will be effective for expanding the bag outwardly and into contact with the walls of the well casing 14 immediately adjacent thereto. Expansion of the tubular bag 18 will, of course, be effective for drawing the upper and lower slidable collars 60 and 61 together along the intermediate portion of the body 19. It should be noted that the latch fingers 66 are biased inwardly with insufficient force to retain the enlarged heads of the latch fingers in the upper circumferential groove 67 as the expansion of the bag 18 further tensions the spring 88.

Accordingly, when the expansible bag 18 is fully expanded, it will assume a position such as depicted in FIG. 3 in which its opposite ends substantially assume a generally hemispherical configuration. It will be noted that once the latch fingers 66 are released from the groove 67, the spring 88 will then be relaxed and will no longer be tensioning the bag 18. At this point, there will still be a substantial volume of the still-fluent substance 23 remaining in the longitudinal bore 27 so that the increased fluid pressure developed in the interior space 68 by the weight of the body 32 acting on the piston 30 will expand the bag 18 outwardly against the well casing 14 with a moderate lateral force. It will be understood, of course, that once the bag 18 is fully expanded, the discharge flow of the fluent substance 23 from the longitudinal bore 27 will temporarily cease and the displacement piston 30 and the weighted body 32 will come to rest at the upper fluid level of the fluent substance in the fluid chamber.

It will be recognized that the fluid pressure expanding the bag 18 outwardly will urge the exterior of the bag against the well casing 14 with a lateral force that is effective to frictionally secure the bag against longitudinal movement. Therefore, as illustrated in FIG. 4, upon upward movement of the suspension cable 11, the upper housing section 17 and the elongated body 19 will be moved upwardly in relation to the stationary expansible bag 18 and the upper and lower slidable collars 60 and 61. As will subsequently be explained in detail, this upward movement is effective for consecutively blocking further communication to the interior space 68 in the expanded bag 18, further actuating the biasing means 20, and ultimately freeing the housing section 17 from the elongated body 19.

First of all, upon upward movement of the elongated body 19, the continued upward travel of the elongated body 19 will be effective for moving the filling ports 69 above the upper collar 60 and then bringing the lower circumferential groove 73 immediately below the ports up to or, perhaps, slightly above the latch fingers 66. It will, of course, be recognized that once the lateral ports 69 pass above the fluid seal 62 on the upper collar 60, the fluent substance 23 within the expanded bag 18 will be sealingly enclosed therein. Moreover, once the lower circumferential groove 73 engages or passes above the latch fingers 66, the upper collar 60 cannot return upwardly in relation to the body 19 to a position where the ports 69 are again in communication with the interior space 68 within the bag 18.

Furthermore, as the elongated body 19 is moved upwardly, the lower end of the spring 88 will be moved upwardly in relation to the collar 61 coupled to the lower end of the bag 18 so that the stout spring will now be compressed for imposing a substantial upwardly directed axial force against the lower end of the stationary expanded bag as shown in FIG. 5. This axial force will be effective for further increasing the fluid pressure of the still-fluent substance 23 trapped within the bag 18 which (if the enlarged heads of the latch fingers 66 are below the groove 73) will initially move the upper collar 60 upwardly to accommodate the corresponding inward or upward depression of the lower end of the bag. Once, however, the upper collar 60 reaches a position on the body 19 where the latch fingers 66 are adjacent to the circumferential groove 73 just below the filling ports 69, the enlarged ends thereof will be urged into the circumferential groove 73 to secure the upper collar from further upward movement. Once the upper collar

73 is secured against further movement in relation to the elongated body 19, the upwardly directed axial force imposed on the lower end of the bag 18 by the stout compression spring 88 will be effective for developing a downwardly directed opposing or axial reaction force on the upper end of the bag for depressing the central portions of the upper and lower ends of the bag inwardly so that, ultimately, the bag will assume the generally toroidal configuration depicted in FIG. 5.

It will be appreciated, therefore, that once the well-completion tool 10 has reached the particular stage of its operation depicted in FIG. 5, the fluent substance 23 trapped within the interior space 68 of the expanded bag 18 will be at a fluid pressure which is equal to the sum of the hydrostatic pressure of the fluids in the well bore 13, the increased pressure developed by the displacement piston 30 once the bag was filled, and the further-increased pressure developed therein by the opposing axial forces imposed thereon by the compression spring 88. The perimeter of the bag 18 will, therefore, be urged outwardly against the wall of the casing 14 with a total force that is proportionally related to the total pressure of the still-fluent substance 23 confined within the expanded bag. Accordingly, once the bag 18 is securely anchored in this manner, as depicted in FIG. 6, the upper housing portion 17 of the tool 10 is separated from the elongated body 19 by simply pulling further on the suspension cable 11 so that the latch fingers 46 will be released from the circumferential groove 45 at the upper end of the elongated body once the displacement piston 30 has engaged the annular plate 49 and shifted the ring 47 below the heads of the latch fingers.

It will be appreciated from FIGS. 4–6 that once the filling ports 69 are uncovered, the weighted body 32 will continue moving the piston 30 downwardly to displace the remainder of the fluent substance 23 contained within the longitudinal bore 27 into the well bore annulus defined between the casing 14 and that portion of the elongated body 19 projecting upwardly above the expanded bag 18. In this manner, an additional quantity of the fluent substance 23 will be deposited on the top of the expanded bag 18 to further assure that an impermeable plug or barrier will be formed in the well bore 13 once the fluent substance has ultimately expanded and hardened. In any event, by virtue of the increased anchoring force provided by the toroidal shape of the bag 18, the upper section 17 of the tool 10 can be released from the elongated body 19 and returned to the surface without having to wait for the fluent substance 23 to harden. Then, as shown in FIG. 6, at some predetermined time thereafter, the timing mechanism 82 will function to release the tension spring 79 so as to shift the annular valve member 75 upwardly across the lower bypass ports 74 and permanently close the bypass passage 22.

It will, of course, be recognized that so long as the fluent substance 23 confined in the expanded bag 18 has not yet hardened, once the upper section 17 of the tool 10 is released from the elongated body 19 the only force retaining the bag and body in position in the well bore 13 will be the frictional force between the bag and the well casing 14. As fully described in a copending application, Ser. No. 875,681, filed Nov. 12, 1969, however, this frictional force is directly proportional to the internal pressure of fluent substance 23 in the expanded bag 18. Accordingly, so long as those forces tending to move the expanded bag 18 in the well bore 13 do not exceed this frictional force, the expanded bag and the elongated body 19 will remain stationary in the well bore. It will be appreciated that the major force tending to move the expanded bag 18 and the body 19 will be the total force acting on the cross-sectional area of the bag as a result of any pressure differential between well bore fluids above and below the bag.

Accordingly, as described in the aforementioned copending application, it has been found that an initial holding force of increased magnitude can be developed by imposing the axially directed force of the biasing spring 88 on one end of the expanded bag 18 and securing the other end of the bag against movement in relation to the body 19 so as to provide the opposing axially directed reaction force on that end of the bag and thereby reform the bag into the generally toroidal configuration depicted in FIGS. 5 and 6. It will be appreciated, therefore, that upon the upward movement of the lower collar 61 toward the upper collar 60 as the spring 88 is compressed, the internal volume of the space 68 within the expanded bag 18 will be slightly reduced as the opposite hemispherical ends of the bag are reformed into their respective inverted or hemitoroidal shapes depicted in FIGS. 5 and 6. Thus, inasmuch as the fluent substance 23 is substantially incompressible, the opposing axial forces imposed on the expanded bag 18 by the spring 88 and the latched upper collar 60 will develop an increased internal pressure within the bag for producing a correspondingly greater initial frictional holding force. Moreover, of paramount significance, it has been found that once the bag 18 assumes the generally toroidal configuration, increasing pressure differentials acting on the bag will further increase the holding force at a faster rate than the rate of increase of the pressure force tending to shift the tool 10.

It will, of course, be appreciated from the aforementioned copending application that the most effective operation of the tool 10 is achieved by selecting a spring rate for the biasing spring 88 that will result in the internal pressure of the expanded bag 18 approaching the rated bursting pressure of the bag at about the point that the pressure differential across the bag is about to cause the tool to slip in relation to the casing 14. In other words, if the spring 88 is too weak, the tool 10 will shift at a relatively low pressure differential; and if the biasing spring is too stout, the bag 18 will burst at a low pressure differential. The selection of the spring 88 will, of course, be dependent upon such factors as the expanded diameter of the bag 18, the bag material, the internal bag pressure before the biasing spring is compressed, etc. In any event, routine tests such as those described in the aforementioned copending application will readily establish the optimum selection for the spring 88 for any given design of the tool 10. Thus, as far as the present invention requires, it is necessary only for the spring 88 to initially retain the collapsed bag 18 in tension along the body 19 and then, once the bag is expanded, be effective for developing the opposed axial forces which act on the opposite ends of the expanded bag to form it into a generally toroidal configuration. The degree or extent of depression of the opposite ends of the expanded bag 18 will govern the rate at which the resulting holding force will increase in response to an increase in the pressure differential acting across the bag.

Accordingly, it will be appreciated that the present invention has provided new and improved well-completion apparatus for plugging a well bore with a fluent hardenable substance. With apparatus arranged in accordance with the principles of the present invention, a tubular bag is sealingly mounted around an elongated body and has one end thereof adapted for longitudinal movement along the body toward the other fixed end of the bag. Selectively operable biasing means, such as a spring or the like, are operatively arranged on the elongated body for initially retaining the bag in a collapsed position and then imposing opposing axial forces on the opposite ends of the bag to reform the bag into a generally toroidal shape once the bag has been filled with a fluent hardenable substance to expand it into sealing engagement with the walls of the well bore. In this manner, the bag will be initially secured in position on the body to protect it as the tool is moved into a well bore. Thereafter, once the tool is positioned within a well bore, as the fluent substance hardens within the expanded bag the biasing means function further to prevent the tool from being shifted by pressure differentials acting thereon. Moreover, should the pressure differential increase sufficiently to burst the bag before this substance hardens, a tool including biasing means arranged in accordance with the present invention will merely fall into the well bore and can be easily retrieved without having to drill it out as would be the case if mechanical anchors were used.

While a particular embodiment of the present invention has been shown and described, it is apparent that changes and

modifications may be made without departing from this invention in its broader aspects; and, therefore, the aim in the appended claims is to cover all such changes and modifications as fall within the true spirit and scope of this invention.

What is claimed is:

1. Apparatus adapted for plugging a well bore and comprising: an elongated body adapted to be suspended in a well bore; a tubular bag of a flexible material arranged around said body; first and second coupling members respectively secured to the opposite ends of said bag and operatively sealed around said body for defining an enclosed space therearound within said bag, said first coupling member being adapted for longitudinal movement along said body toward said second coupling member; first means including a passage on said body communicating with said enclosed space and adapted for admitting a fluent hardenable substance into said enclosed space to expand said bag outwardly into contact with a well bore wall; and biasing means normally retaining said bag collapsed along said body and operable after said bag is expanded for moving said first coupling member further along said body toward said second coupling member to urge said bag ends axially inwardly and form said expanded bag into a generally toroidal configuration for anchoring said well bore apparatus in a well bore against movement by unbalanced pressure forces acting thereon as a fluent substance disposed within said expanded bag hardens into a solidified mass.

2. The apparatus of claim 1 wherein said first means further include valve means operable upon the expansion of said bag into contact with a well bore wall for terminating further communication between said passage and said enclosed space to confine a fluent substance therein once said bag is fully expanded.

3. The apparatus of claim 1 wherein said biasing means include spring means coupled between said body and said first coupling member normally urging said first coupling member away from said second coupling member and selectively operable for forcibly urging said first coupling member toward said second coupling member after said bag is expanded.

4. The apparatus of claim 3 wherein said second coupling member is also adapted for longitudinal movement along said body from a first position to a second position toward said first coupling member upon expansion of said bag; said first means further include valve means operable upon movement of said second coupling member to said second position for terminating further communication between said passage and said enclosed space to confine a fluent substance therein once said bag is fully expanded; and further including latch means adapted for releasably securing said second coupling member in said second position so that upon movement of said first coupling member by said spring means toward said second coupling member said bag ends will be depressed axially inwardly toward one another.

5. Apparatus adapted for plugging a well bore and comprising: an elongated body adapted to be suspended in a well bore; first and second coupling members fluidly sealed around said body and adapted for movement relative to one another between longitudinally spaced positions along said body; a tubular bag of a flexible material arranged around said body and having its opposite ends respectively secured and fluidly sealed to said first and second coupling members for defining an enclosed space therein; selectively operable fluid displacement means coupled to said body and adapted to fill said enclosed space with an initially fluent hardenable substance for expanding said bag outwardly into firm frictional contact with a well bore wall and moving said first and second coupling members toward one another to respectively form said bag ends into a generally hemispherical configuration; biasing means operatively coupled between said body and said first coupling member normally retarding movement of said first coupling member and responsive to movement of said body in relation to said expanded bag for urging said first coupling member toward said second coupling member with an axial force sufficient to reform the adjacent end of said bag into a generally hemitoroidal configuration; and means operable for securing said second coupling member to said body as said biasing means are urging said first coupling member toward said second coupling member so that said second coupling member will impose a reaction force axially against the other end of said bag to reform it into a generally hemitoroidal configuration so that unbalanced pressure forces acting on either of said bag ends will urge said bag outwardly into firmer frictional contact with a well bore wall while a fluent substance contained therein solidifies into a hardened mass.

6. The apparatus of claim 5 further including a fluid bypass on said body adapted for providing fluid communication above and below said expanded bag until a fluent substance contained therein solidifies into a hardened mass; and valve means on said body adapted for closing said fluid bypass after a fluent substance contained in said bag has solidified into a hardened mass.

7. The apparatus of claim 5 further including means operable for uncoupling said fluid-displacement means from said body after said enclosed space has been filled by said fluid-displacement means.

8. Apparatus adapted for plugging a well bore and comprising: an upper body and a lower body tandemly coupled to one another and adapted to be supported in a well bore from a suspension cable; upper and lower coupling members fluidly sealed around said lower body and adapted for sliding movement relative to said lower body between longitudinally spaced positions; a tubular bag of a flexible material extended around said lower body and having its upper and lower ends respectively secured and fluidly sealed to said upper and lower coupling members for defining an enclosed space therein; selectively operable fluid-displacement means on said upper body and fluidly coupled to said enclosed space for filling said bag with an initially fluent hardenable substance to expand said bag outwardly into firm frictional contact with a well bore and respectively form said bag ends into a generally hemispherical configuration as said upper and lower coupling members move along said lower body toward one another; first means responsive to upward movement of said upper and lower bodies in relation to said expanded bag for uncoupling said fluid-displacement means from said enclosed space to trap a fluent substance discharged into said enclosed space within said expanded bag; spring means operatively coupled between said lower coupling member and said lower body normally urging said lower coupling member downwardly to retain said bag collapsed along said lower body and responsive only to said upward movement of said upper and lower bodies for urging said lower coupling member closer to said upper coupling member to respectively reform said bag ends into a generally hemitoroidal configuration so that unbalanced pressure forces acting on either of said bag ends will urge said bag outwardly into firmer frictional contact with a well bore wall while a fluent substance contained therein solidifies into a hardened mass; and latch means operatively arranged between said upper coupling member and said lower body and selectively operable for securing said upper coupling member against downward movement relative to said lower body so long as said bag is collapsed therealong and for securing said upper coupling member against upward movement relative to said lower body once said upper bag end has assumed a generally hemispherical configuration.

9. The apparatus of claim 8 further including latch means responsive to further movement of said upper and lower bodies for uncoupling said upper body from said lower body.

10. The apparatus of claim 8 wherein said first means include a fluid passage between said fluid-displacement means and said enclosed space, and valve means operatively arranged between said upper coupling member and said lower body for closing said fluid passage once said upper coupling member is secured against upward movement by said latch means.

11. Apparatus adapted to be supported in a well bore from a suspension cable for plugging that well bore at a selected loca-

tion and comprising: an elongated body having upper and lower portions; upper and lower coupling members fluidly sealed around upper and lower body portions and respectively adapted for sliding movement longitudinally thereon toward one another between first widely spaced positions and second closely spaced positions; a tubular bag of a flexible material arranged around said body between said coupling members and having its upper and lower ends respectively coupled to and fluidly sealed to said upper and lower coupling members for defining an enclosed space therein; means including a passage in said body and a port communicating with said passage formed in said body between said first and second positions of said upper coupling member and adapted for admitting a fluent hardenable substance into said enclosed space for admitting a fluent hardenable substance into said enclosed space to expand said bag outwardly into holding contact with a well bore wall and thereby form said upper and lower bag ends respectively into a generally hemispherical configuration; means including biasing means operatively arranged between said lower coupling member and said lower body portion normally urging said lower coupling member toward its said first position and adapted for imposing an axial force upwardly against said lower coupling member upon upward movement of said body in relation to said expanded bag and said coupling members for shifting said lower coupling member to its said second position and thereby reform said upper and lower bag ends respectively into a generally hemitoroidal configuration for tightly anchoring said well bore apparatus in a well bore against unbalanced pressure forces acting on said expanded bag as a fluent substance disposed within said expanded bag solidifies into a solidified mass; and latch means operatively arranged between said upper coupling member and said upper body portion for normally securing said upper coupling member in its said first position and for securing said upper coupling member in its said second position upon upward movement of said body in relation to said expanded bag and said coupling members and shifts said port above said upper coupling member to confine a fluent substance within said enclosed space of said expanded bag.

12. The apparatus of claim 11 wherein said biasing means include a coil spring arranged around said lower body portion and having its lower end coupled thereto and its upper end coupled to said lower coupling member, said coil spring normally being stretched so long as said coupling members are in their said first positions and adapted to be compressed upon said upward movement of said body for imposing said axial force.

* * * * *