US 20110213347A1

(19) United States

(12) Patent Application Publication

Lee et al.

(10) Pub. No.: US 2011/0213347 A1

(43) Pub. Date: Sep. 1, 2011

(54) SURGICAL INSTRUMENT

(75) Inventors: **Woojin Lee**, Hopkinton, MA (US); **Andres Chamorro**, Waltham, MA (US); **Woojoong Lee**, Saba (NA)

(73) Assignee: **CAMBRIDGE ENDOSCOPIC DEVICES, INC.**, Framingham, MA (US)

(21) Appl. No.: **13/108,044**

(22) Filed: **May 16, 2011**

Related U.S. Application Data

(63) Continuation of application No. 11/528,134, filed on Sep. 27, 2006.

(60) Provisional application No. 60/830,035, filed on Jul. 11, 2006.

Publication Classification

(51) **Int. Cl.**
A61B 17/00 (2006.01)

(52) **U.S. Cl.** **606/1**

(57) **ABSTRACT**

A surgical instrument that includes an instrument shaft having proximal and distal ends, a tool disposed from the distal end of the instrument shaft, a control handle disposed from the proximal end of the instrument shaft, a distal motion member for coupling the distal end of the instrument shaft to the tool, a proximal motion member for coupling the proximal end of the instrument shaft to the handle, actuation means extending between the distal and proximal motion members for coupling motion of the proximal motion member to the distal motion member for controlling the positioning of the tool, a rotation knob disposed adjacent the control handle and rotatable relative to the control handle for causing a corresponding rotation of the instrument shaft and tool and a locking mechanism for fixing the position of the tool at a selected position and having locked and unlocked states. The rotation knob has a first position in which the locking mechanism is controlled to be in its locked state and a second position in which the locking mechanism is released to its unlocked state so as to allow tool positioning.

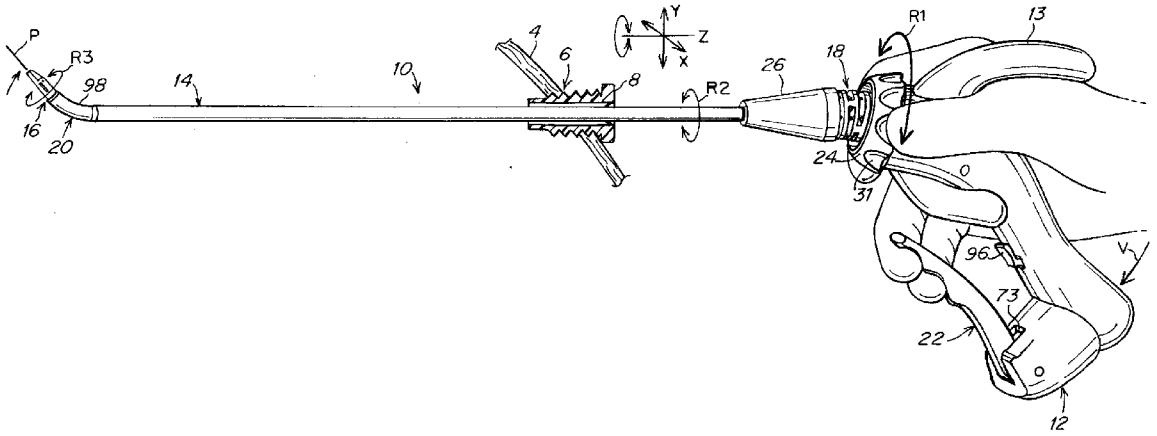

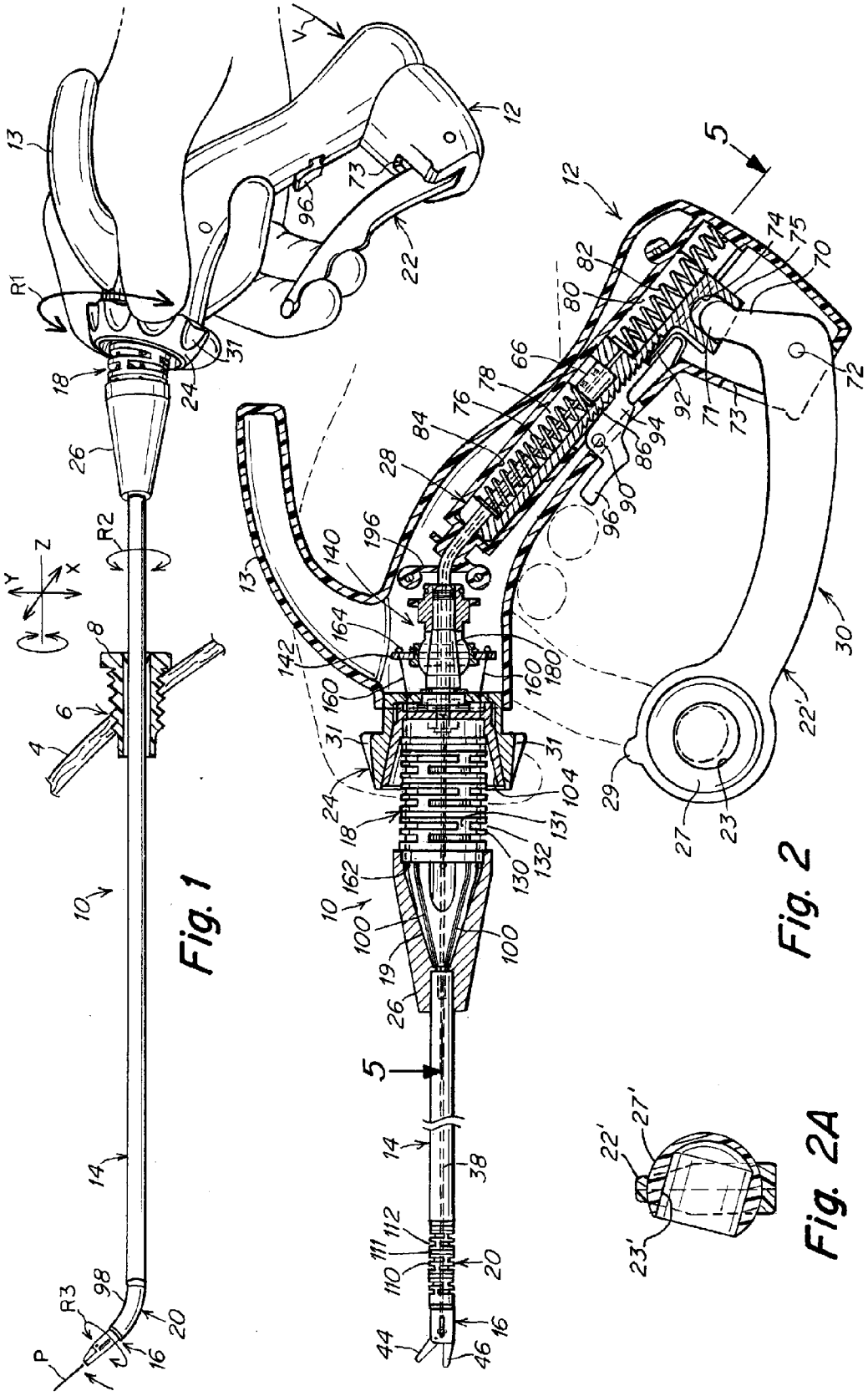
Fig. 1
Fig. 2
Fig. 2A

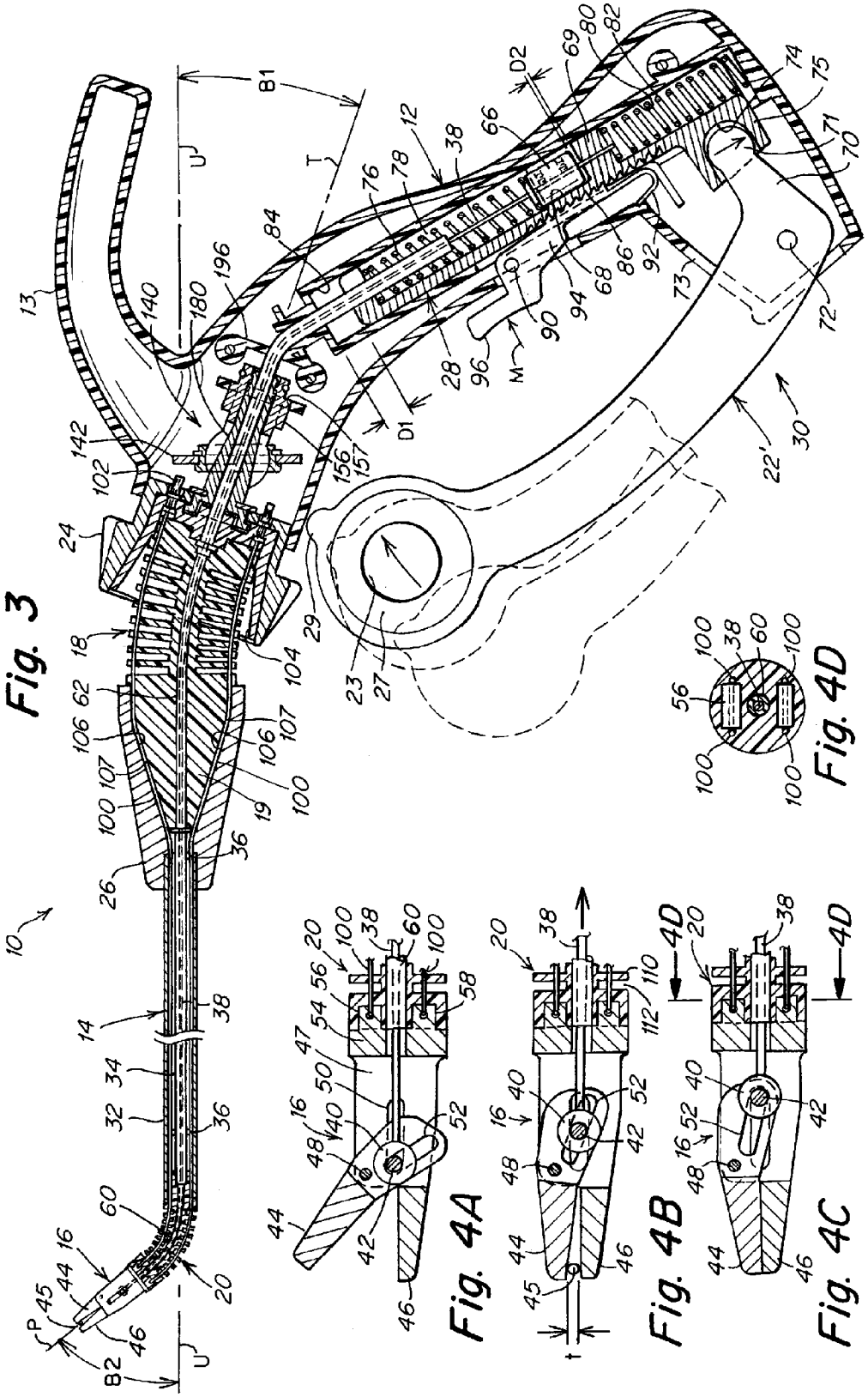
Fig. 3
Fig. 4A
Fig. 4B
Fig. 4C
Fig. 4D

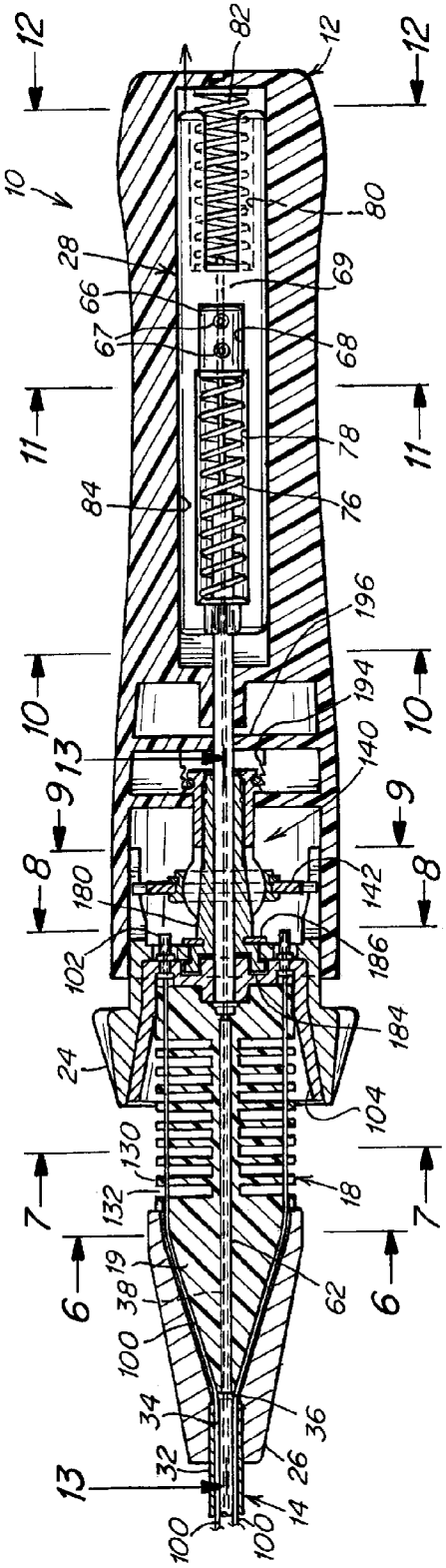

Fig. 5

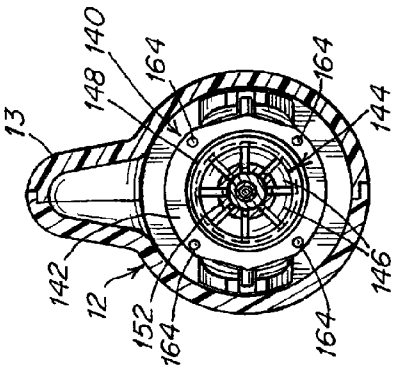

Fig. 9

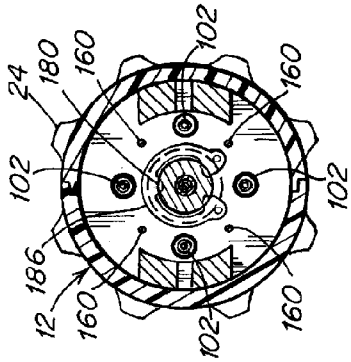

Fig. 8

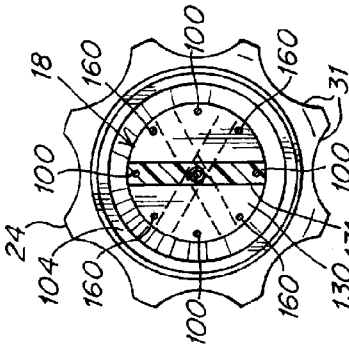

Fig. 7

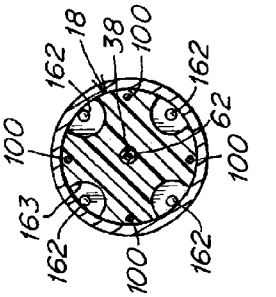

Fig. 6

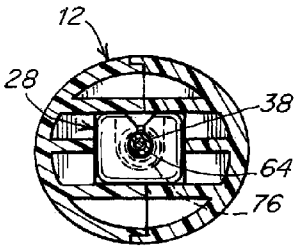

Fig. 10

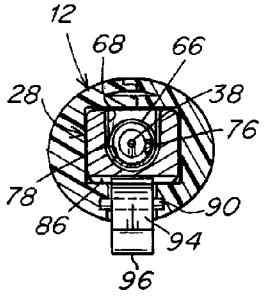

Fig. 11

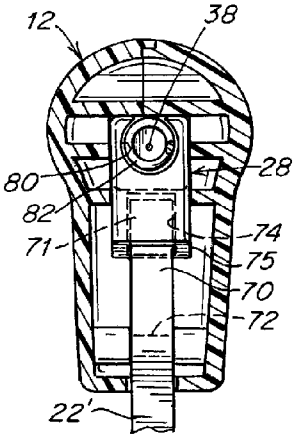

Fig. 12

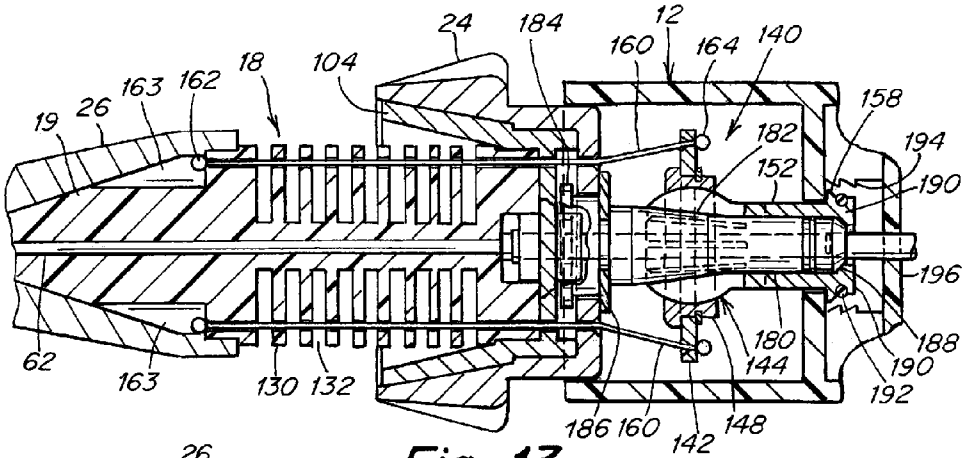

Fig. 13

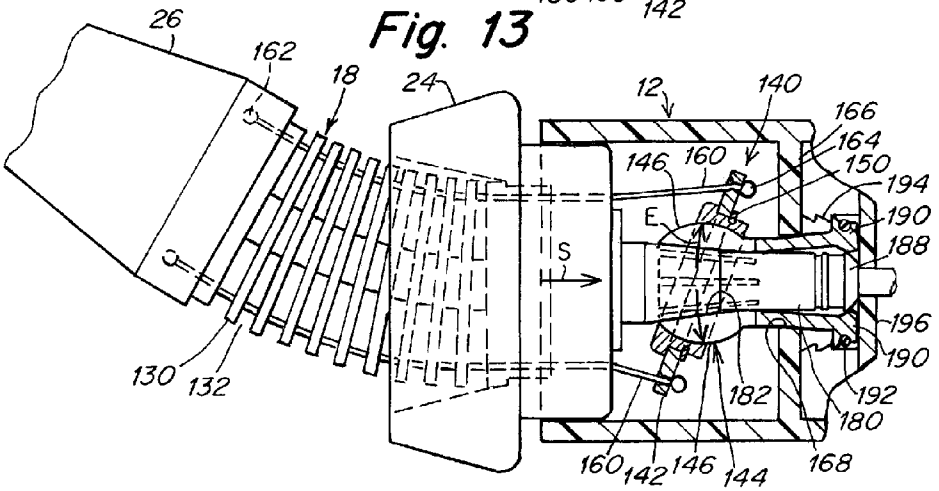

Fig. 14

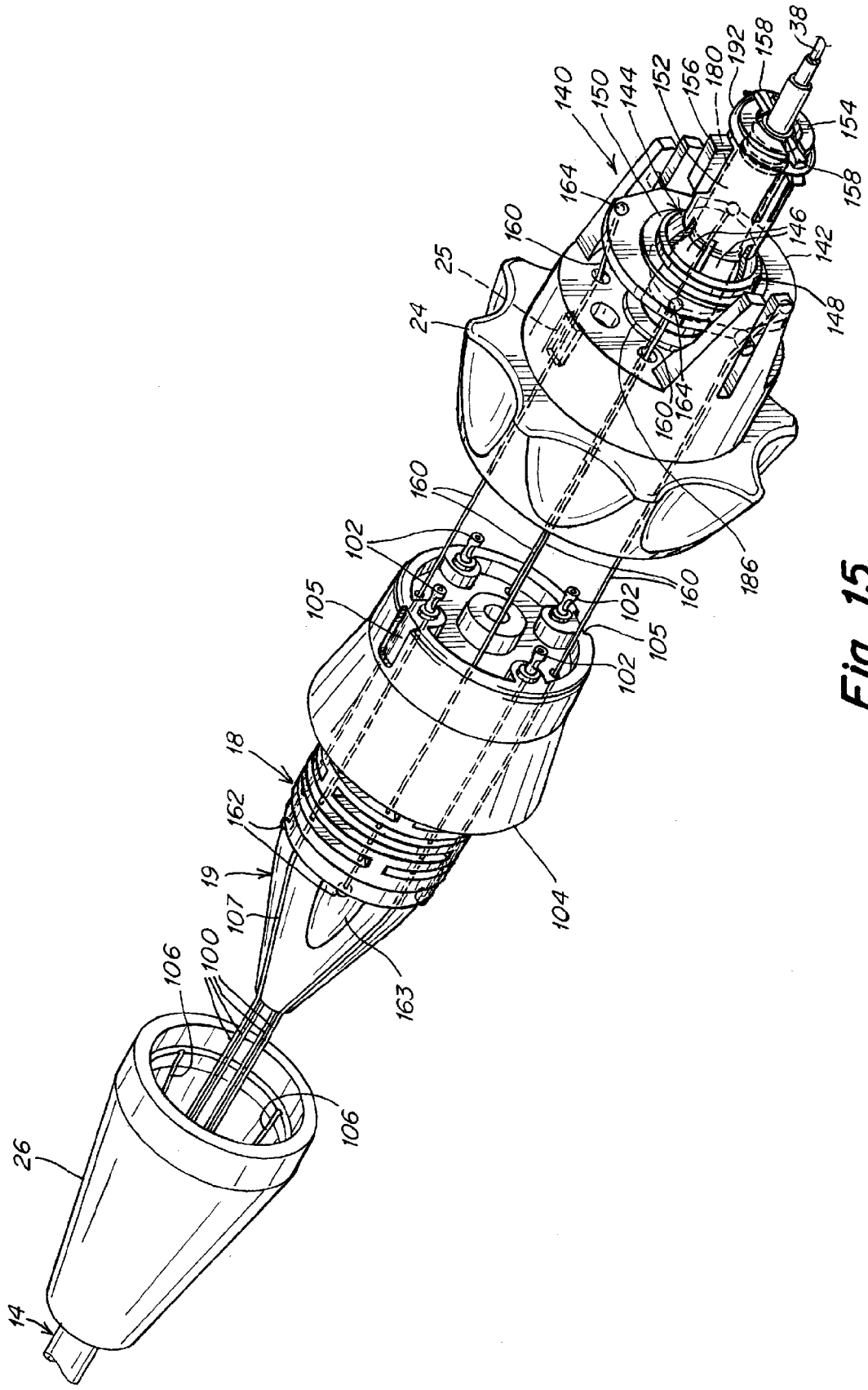
14
26
106
100
107
19
162
18
163
104
105
102
160
25
24
164
140
150
144
152
156
180
192
158
38
154
146
142
148
186

Fig. 15

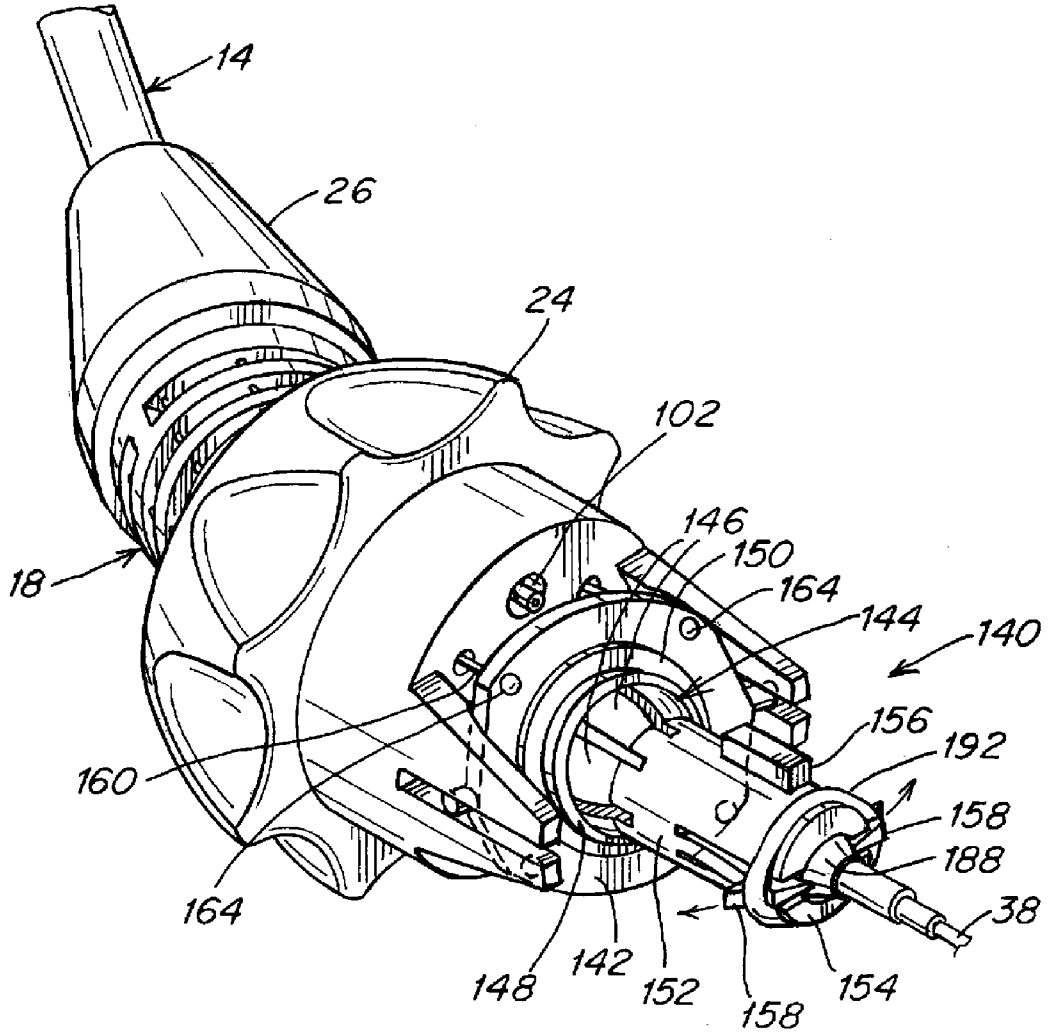
14
26
24
102
146
150
164
144
140
18
156
192
160
158
188
164
38
148
142
152
158
154

Fig. 16

SURGICAL INSTRUMENT

RELATED APPLICATION

[0001] Priority for this application is hereby claimed under 35 U.S.C. §119(e) to commonly owned and co-pending U.S. Provisional Patent Application No. 60/830,035 which was filed on Jul. 11, 2006. The content of all of the aforementioned application is hereby incorporated by reference herein in its entirety.

TECHNICAL FIELD

[0002] The present invention relates in general to surgical instruments, and more particularly to manually-operated surgical instruments that are intended for use in minimally invasive surgery or other forms of surgical or medical procedures or techniques. The instrument described herein is primarily for a laparoscopic procedure, however, it is to be understood that the instrument of the present invention can be used for a wide variety of other procedures, including intraluminal procedures.

BACKGROUND OF THE INVENTION

[0003] Endoscopic and laparoscopic instruments currently available in the market are extremely difficult to learn to operate and use, mainly due to a lack of dexterity in their use. For instance, when using a typical laparoscopic instrument during surgery, the orientation of the tool of the instrument is solely dictated by the locations of the target and the incision. These instruments generally function with a fulcrum effect using the patients own incision area as the fulcrum. As a result, common tasks such as suturing, knotting and fine dissection have become challenging to master. Various laparoscopic instruments have been developed over the years to overcome this deficiency, usually by providing an extra articulation often controlled by a separately disposed control member for added control. However, even so these instruments still do not provide enough dexterity to allow the surgeon to perform common tasks such as suturing, particularly at any arbitrarily selected orientation. Also, existing instruments of this type do not provide an effective way to hold the instrument in a particular position. Moreover, existing instruments require the use of both hands in order to effectively control the instrument.

[0004] Accordingly, an object of the present invention is to provide an improved laparoscopic or endoscopic surgical instrument that allows the surgeon to manipulate the tool end of the surgical instrument with greater dexterity.

[0005] Another object of the present invention is to provide an improved surgical or medical instrument that has a wide variety of applications, through incisions, through natural body orifices or intraluminally.

[0006] A further object of the present invention is to provide an improved medical instrument that is characterized by the ability to lock the instrument in a pre-selected particular position.

[0007] Another object of the present invention is to provide a locking feature that is an important adjunct to the other controls of the instrument enabling the surgeon to lock the instrument once in the desired position. This makes it easier for the surgeon to thereafter perform surgical procedures without having to, at the same time, hold the instrument in a particular bent configuration.

[0008] Still another object of the present invention is to provide an improved medical instrument that can be effectively controlled with a single hand of the user.

[0009] Still a further object of the present invention is to provide an improved medical instrument in which both locking and rotation features of the instrument are controlled from a single control element.

SUMMARY OF THE INVENTION

[0010] To accomplish the foregoing and other objects, features and advantages of the present invention there is provided a surgical instrument that includes an instrument shaft having proximal and distal ends; a tool disposed from the distal end of the instrument shaft; a control handle disposed from the proximal end of the instrument shaft; a distal motion member for coupling the distal end of said instrument shaft to said tool; a proximal motion member for coupling the proximal end of said instrument shaft to said handle; actuation means extending between said distal and proximal motion members for coupling motion of said proximal motion member to said distal motion member for controlling the positioning of said tool; a rotation knob disposed adjacent the control handle and rotatable relative to the control handle for causing a corresponding rotation of the instrument shaft and tool; and a locking mechanism for fixing the position of the tool at a selected position and having locked and unlocked states. The rotation knob has a first position in which the locking mechanism is controlled to be in its locked state and a second position in which the locking mechanism is released to its unlocked state so as to allow tool positioning.

[0011] In accordance with other aspects of the present invention at least the proximal motion member comprises a proximal bendable member and the rotation knob is adapted to rotate the tool about a distal tool roll axis; the control handle comprises a pistol grip handle having an engagement horn to assist in holding the handle; the rotation knob is disposed at the distal end of the handle and the horn is disposed proximally of the rotation knob and on the top of the pistol grip handle; including an actuation lever supported from the pistol grip handle at a pivot point at the proximal end of the handle; the actuation lever has a free end with a finger loop for receiving a users finger to control the lever; further including a release button on the handle in juxtaposition to the lever and for releasing the lever from an actuated to released position; the rotation knob is supported relative to the handle so as to rotate about a rotation knob axis, and wherein the rotation knob is moved axially from the first to second positions; the rotation knob is moved toward the handle to activate the locking mechanism and is moved away from the handle to release the locking mechanism; including a tool actuation cable that extends from the tool to the handle, a slider for capturing the proximal end of said tool actuation cable and an actuation lever supported at the handle for controlling the translation of the slider; including a slideway for receiving the slider, a pair of springs disposed in the slider and a rotational barrel disposed between the springs and for holding the proximal end of the tool actuation cable; the locking mechanism comprises a follower mechanism disposed proximally of the rotation knob, the proximal motion member comprising a proximal bendable member and a plurality of locking cables that intercouple between the follower mechanism and the proximal bendable member; the locking mechanism further comprises an expandable sphere for supporting the locking

cables and a plunger engaging with a center passage of the expandable sphere, the plunger supported from the rotation knob.

[0012] In accordance with another embodiment of the present invention there is provided a surgical instrument comprising: an instrument shaft having proximal and distal ends; a tool disposed from the distal end of the instrument shaft; a control handle disposed from the proximal end of the instrument shaft; a distal motion member for coupling the distal end of the instrument shaft to the tool; a proximal motion member for coupling the proximal end of the instrument shaft to the handle; actuation means extending between the distal and proximal motion members for coupling motion of the proximal motion member to the distal motion member for controlling the positioning of the tool; said control handle including a pistol grip handle; and an actuation lever for controlling the tool and pivotally supported from the handle; said actuation lever having a free end with a recess for receiving a finger of the user to control the actuation lever.

[0013] In accordance with other aspects of the present invention the surgical instrument includes a ball supported in a socket at the free end of the actuation lever, said ball having a hole therein that defines the finger recess; the ball is freely rotatable in the socket and the hole is a through hole; the ball is freely rotatable in the socket and the hole is a blind hole; a release button on the handle is in juxtaposition to the lever and for releasing the lever from an actuated to released position; a rotation knob is disposed adjacent the control handle and rotatable relative to the control handle for causing a corresponding rotation of the instrument shaft and tool, and a locking mechanism for fixing the position of the tool at a selected position and having locked and unlocked states, said rotation knob having a first position in which the locking mechanism is controlled to be in its locked state and a second position in which the locking mechanism is released to its unlocked state so as to allow tool positioning; the rotation knob is supported relative to the handle so as to rotate about a rotation knob axis, and wherein the rotation knob is moved axially from the first to second positions; an engagement horn to assist in holding the handle and wherein the rotation knob is disposed at the distal end of the handle and the horn is disposed proximally of the rotation knob and on the top of the pistol grip handle.

[0014] In accordance with still another embodiment there is provided a medical instrument having a proximal control handle and a distal tool that are intercoupled by an elongated instrument shaft that is meant to pass internally of an anatomic body, proximal and distal movable members that respectively intercouple the proximal control handle and the distal tool with the instrument shaft, cable actuation means disposed between the movable members, said control handle having proximal and distal ends, an actuation lever for controlling the distal tool, means for pivotally supporting the actuation lever from the proximal end of the handle at one side thereof, a horn and means for fixedly supporting the horn from the distal end of the handle at an opposite side thereof.

[0015] In accordance with still other aspects of the present invention the medical instrument includes a locking means that is manually operable by a user and that includes a follower the position of which is responsive to the position of the movable members; a rotation knob is disposed adjacent the control handle and rotatable relative to the control handle for causing a corresponding rotation of the instrument shaft and tool, and a locking mechanism for fixing the position of the tool at a selected position and having locked and unlocked states, said rotation knob having a first position in which the locking mechanism is controlled to be in its locked state and a second position in which the locking mechanism is released to its unlocked state so as to allow tool positioning; the rotation knob is supported relative to the handle so as to rotate about a rotation knob axis, and wherein the rotation knob is moved axially from the first to second positions; the control handle includes a pistol grip handle and the actuation lever has a free end with a recess for receiving a finger of the user to control the actuation lever; a ball is supported in a socket at the free end of the actuation lever, said ball having a hole therein that defines the finger recess; including a rotation control member at the distal end of the handle, said horn disposed adjacent to the rotation control member, said actuation lever supported for movement toward and away from the handle; including a release button on the handle in juxtaposition to the lever and for releasing the lever from an actuated to released position; including a slider in the handle for controlling a tool actuation cable, said lever including a pivot point attached to the handle and disposed between one end that defines a socket for a rotation gimbal for accommodating the user's finger and another end that engages the slider.

BRIEF DESCRIPTION OF THE DRAWINGS

[0016] It should be understood that the drawings are provided for the purpose of illustration only and are not intended to define the limits of the disclosure. The foregoing and other objects and advantages of the embodiments described herein will become apparent with reference to the following detailed description when taken in conjunction with the accompanying drawings in which:

[0017] FIG. **1** is a perspective view of a first embodiment of the surgical instrument of the present invention illustrating it being grasped by a surgeon;

[0018] FIG. **2** is a cross-sectional side view of a second embodiment of the instrument of the present invention with the instrument in its rest position and illustrating in phantom the surgeon's fingers;

[0019] FIG. **2**A is a cross-sectional view of an alternate embodiment of the finger gimbal;

[0020] FIG. **3** is an enlarged cross-sectional side view of the instrument shown in FIG. **2** showing the end effector bent at an angle B**2** in response to the handle being bent at an angle B**1**, and with the end effector in a closed position grasping an item;

[0021] FIGS. **4**A-**4**C are illustrative cross-sectional side views at the distal end of the medical instrument, and with the movable jaw in different respective positions;

[0022] FIG. **4**D is a cross-sectional view taken along line **4**D-**4**D of FIG. **4**C;

[0023] FIG. **5** is a cross-sectional plan view of the handle portion of the instrument of the second embodiment as taken along line **5-5** of FIG. **2**;

[0024] FIG. **6** is a cross-sectional end view taken along line **6-6** of FIG. **5**;

[0025] FIG. **7** is a cross-sectional end view taken along line **7-7** of FIG. **5**;

[0026] FIG. **8** is a cross-sectional end view taken along line **8-8** of FIG. **5**;

[0027] FIG. **9** is a cross-sectional end view taken along line **9-9** of FIG. **5**;

[0028] FIG. **10** is a cross-sectional end view taken along line **10-10** of FIG. **5**;

[0029] FIG. **11** is a cross-sectional end view taken along line **11-11** of FIG. **5**;

[0030] FIG. **12** is a cross-sectional end view taken along line **12-12** of FIG. **5**;

[0031] FIG. **13** is a fragmentary enlarged cross-sectional plan view taken along line **13-13** of FIG. **5** showing the proximal bendable member and angled locking mechanism at rest;

[0032] FIG. **14** is a cross-sectional view similar to that shown in FIG. **13**, but with the proximal bendable member locked in an angled relationship to the handle;

[0033] FIG. **15** is an exploded perspective view at the proximal bendable member and rotation knob, and illustrating further details of the angle locking member of FIG. **13**; and

[0034] FIG. **16** is a fragmentary perspective view of the assembled proximal bendable member, rotation knob and locking mechanism of FIG. **15**, but showing the proximal bendable member locked in a bent position relative to the instrument handle.

DETAILED DESCRIPTION OF THE PREFERRED EMBODIMENT

[0035] The instrument of the present invention may be used to perform minimally invasive procedures. "Minimally invasive procedure," refers herein to a surgical procedure in which a surgeon operates through small cut or incision, the small incision being used to access the operative site. In one embodiment, the incision length ranges from 1 mm to 20 mm in diameter, preferably from 5 mm to 10 mm in diameter. This procedure contrasts those procedures requiring a large cut to access the operative site. Thus, the flexible instrument is preferably used for insertion through such small incisions and/or through a natural body lumen or cavity, so as to locate the instrument at an internal target site for a particular surgical or medical procedure. The introduction of the surgical instrument into the anatomy may also be by percutaneous or surgical access to a lumen or vessel, or by introduction through a natural orifice in the anatomy.

[0036] In addition to use in a laparoscopic procedure, the instrument of the present invention may be used in a variety of other medical or surgical procedures including, but not limited to, colonoscopic, upper GI, arthroscopic, sinus, thorasic, prostate, transvaginal and cardiac procedures. Depending upon the particular procedure, the instrument shaft may be rigid, semi-rigid or flexible.

[0037] Although reference is made herein to a "surgical instrument," it is contemplated that the principles of this invention also apply to other medical instruments, not necessarily for surgery, and including, but not limited to, such other implements as catheters, as well as diagnostic and therapeutic instruments and implements.

[0038] FIG. **1** is a perspective view of one embodiment of the surgical instrument **10** of the present invention. In this surgical instrument both the tool and handle motion members or bendable members are capable of bending in any direction. They are interconnected via cables in such a way that a bending action at the proximal member provides a related bending at the distal member. The proximal bending is controlled by a motion or deflection of the control handle by a user of the instrument. In other words the surgeon grasps the handle and once the instrument is in position any motion at the handle (deflection) immediately controls the proximal bendable member which, in turn, via cabling controls a corresponding bending or deflection at the distal bendable member. This action, in turn, controls the positioning of the distal tool.

[0039] The proximal member is preferably generally larger than the distal member so as to provide enhanced ergonomic control. In one version in accordance with the invention there may be provided a bending action in which the distal bendable member bends in the same direction as the proximal bendable member. In an alternate embodiment the bendable, turnable or flexible members may be arranged to bend in opposite directions by rotating the actuation cables through 180 degrees, or could be controlled to bend in virtually any other direction depending upon the relationship between the distal and proximal support points for the cables.

[0040] It should be noted that the amount of bending motion produced at the distal bending member is determined by the dimension of the proximal bendable member in comparison to that of the distal bendable member. In the embodiment described the proximal bendable member is generally larger than the distal bendable member, and as a result, the magnitude of the motion produced at the distal bendable member is greater than the magnitude of the motion at the proximal bendable member. The proximal bendable member can be bent in any direction (about 360 degrees) controlling the distal bendable member to bend in either the same or an opposite direction, but in the same plane at the same time. Also, as depicted in FIG. **1**, the surgeon is able to bend and roll the instrument's tool about its longitudinal axis at any orientation simply by rolling the axial rotation knob.

[0041] In this description reference is made to bendable members. These members may also be referred to as turnable members, bendable members or flexible members. In the descriptions set out herein, terms such as "bendable section," "bendable segment," "bendable motion member," or "turnable member" refer to an element of the instrument that is controllably bendable in comparison to an element that is pivoted at a joint. The term "movable member" is considered as generic to bendable sections and joints. The bendable elements of the present invention enable the fabrication of an instrument that can bend in any direction without any singularity and that is further characterized by a ready capability to bend in any direction, all preferably with a single unitary or uni-body structure. A definition of a "unitary' or "uni-body" structure is—a structure that is constructed only of a single integral member and not one that is formed of multiple assembled or mated components—.

[0042] A definition of these bendable motion members is—an instrument element, formed either as a controlling means or a controlled means, and that is capable of being constrained by tension or compression forces to deviate from a straight line to a curved configuration without any sharp breaks or angularity—. Bendable members may be in the form of unitary structures, such as shown herein in FIG. **2**, may be constructed of engageable discs, or the like, may include bellows arrangements or may comprise a movable ring assembly. For other forms of bendable members refer to co-pending provisional application Ser. No. 60/802,885 filed on May 23, 2006 and 60/811,046 filed on Jun. 5, 2006, both of which are hereby incorporated by reference herein in their entirety.

[0043] FIG. **1** shows a first embodiment of the instrument of the present invention. A second preferred embodiment is illustrated in FIGS. **2-16**. FIG. **1** depicts the surgical instrument **10** in position, as may occur during a surgical procedure.

For example, the instrument may be used for laparoscopic surgery through the abdominal wall **4**. For this purpose there is provided an insertion site **6** at which there is disposed a cannula or trocar **8**. The shaft **14** of the instrument **10** is adapted to pass through the cannula **8** so as to dispose the distal end of the instrument at an operative site. The end effector **16** is depicted in FIG. **1** at such an operative site. FIG. **1** also depicts the rolling motion that can be carried out with the instrument of the present invention. This can occur by virtue of the rotation of the rotation knob **24** relative to the handle **12** about axis T (refer to FIG. **3**). This is illustrated in FIG. **1** by the circular arrow R**1**. Also see in FIG. **1** the coordinate X-Y-Z system. The Z axis corresponds to the longitudinal axis of the instrument shaft **14**. When the rotation knob **24** is rotated, in either direction, this causes a corresponding rotation of the instrument shaft **14**. This is depicted in FIG. **1** by the rotational arrow R**2**. This same motion also causes a rotation of the end effector **16** about axis P as illustrated by the rotational arrow R**3**.

[0044] Any rotation of the rotation knob **24** while the instrument is locked (or unlocked) maintains the instrument tip at the same angular position, but rotates the orientation of the tip (tool). For a further explanation of the rotational feature refer to co-pending application Ser. No. 11/302,654, filed on Dec. 14, 2005, particularly FIGS. 25-28, which is hereby incorporated by reference in its entirety.

[0045] In FIG. **3** the handle **12**, via proximal bendable member **18**, is shown tilted along axis T at an angle B**1** to the instrument shaft longitudinal center axis U. This tilting, deflecting or bending may be considered as in the plane of the paper. By means of the cabling this action causes a corresponding bend at the distal bendable member **20** to a position wherein the tip is directed along axis P and at an angle B**2** to the instrument shaft longitudinal center axis U. The bending at the proximal bendable member **18** is controlled by the surgeon from the handle **12** by manipulating the handle in essentially any direction including in and out of the plane of the paper in FIG. **3**. This manipulation directly controls the bending at the proximal bendable member.

[0046] Thus, the control at the handle is used to bend the instrument at the proximal motion member to, in turn, control the positioning of the distal motion member and tool. The "position" of the tool is determined primarily by this bending or motion action and may be considered as the coordinate location at the distal end of the distal motion member. Actually, one may consider a coordinate axis at both the proximal and distal motion members as well as at the instrument tip. This positioning is in three dimensions. The "orientation" of the tool, on the other hand, relates to the rotational positioning of the tool about the illustrated distal tip axis (see axis P in FIG. **3**).

[0047] In the drawings a set of jaws is depicted, however, other tools or devices may be readily adapted for use with the instrument of the present invention. These include, but are not limited to, cameras, detectors, optics, scope, fluid delivery devices, syringes, etc. The tool may include a variety of articulated tools such as: jaws, scissors, graspers, needle holders, micro dissectors, staple appliers, tackers, suction irrigation tools and clip appliers. In addition, the tool may include a non-articulated tool such as: a cutting blade, probe, irrigator, catheter or suction orifice.

[0048] The surgical instrument of FIG. **1** shows a first embodiment of a surgical instrument **10** according to the invention in use and inserted through a cannula **8** at an insertion site **6** through a patient's skin. Many of the components shown in both embodiments described herein, such as the instrument shaft **14**, end effector **16**, distal bending member **20**, and proximal bending member **18** may be similar to and interact in the same manner as the instrument components described in the co-pending U.S. application Ser. No. 11/185,911 filed on Jul. 20, 2005 and hereby incorporated by reference herein in its entirety. Also incorporated by reference in their entirety are U.S. application Ser. No. 10/822,081 filed on Apr. 12, 2004; U.S. application Ser. No. 11/242,642 filed on Oct. 3, 2005 and U.S. application Ser. No. 11/302,654 filed on Dec. 14, 2005, all commonly owned by the present assignee.

[0049] The first embodiment of the instrument shown in FIG. **1** is typically used with a sheath **98** to keep bodily fluids from entering the distal bending member **20**. The rotation knob **24**, proximal bending member **18** and adapter **26** accommodate preferably four bend control cables, as well as four lock control cables which are connected to a novel angle locking means or follower **140** which is supported adjacent the proximal end of the rotation knob **24**, as depicted in FIG. **2**. The locking means interacts with a portion of the proximal bendable member **18** to lock and unlock the positioning of the bend control cables which in turn control the angle of the proximal bending member and thus the angle of the distal bendable member and end effector. This lock control allows the surgeon one less degree of control to concentrate on when performing certain tasks. By locking the bendable sections at a particular position, this enables the surgeon to be more hands-free for controlling other degrees of freedom of the instrument such as manipulation of the rotation knob **24** and, in turn, orientation of the end effector.

[0050] The instruments shown in respective FIGS. **1** and **2** are primarily of the same construction with the exception that the control lever for tool actuation is somewhat different in the two embodiments. In both of these embodiments the handle is of a pistol grip type. In FIG. **1** the lever **22** has multiple indentations for one or more fingers and a release button on the handle disposed in facing relationship to the lever. In the embodiment of FIG. **2** the lever **22'** has a single finger hole for controlling the lever and also includes a similar release button. The release button is used to release the actuated or closed tool and is identified in both of the disclosed embodiments as button **96**.

[0051] In the first embodiment, the instrument is illustrated with the handle end of the instrument tipped downwardly in the direction of arrow V. This movement bends the instrument at the proximal bendable member **18**, as can be seen in FIG. **1**. This action, in turn, bends the distal bendable member upwardly as also shown in FIG. **1**. As mentioned before, opposite direction bending can be used by rotating or twisting the control cables through 180 degrees.

[0052] One feature of the present invention is the ability for both locking and rotating the instrument, controlled from a single control element, preferably controlled at the rotation knob **24**. In a preferred embodiment of the present invention the angle locking means **140** is engaged by axially displacing the rotation knob, such as by pulling on the rotation knob **24** in a proximal direction into the handle. The locking feature can be released or disengaged by pushing on the knob **24** in a distal direction as described in further detail hereinafter.

[0053] In both embodiments described herein, the handle **12** is in the form of a pistol grip and includes a horn **13** to facilitate a comfortable interface between the action of the surgeon's hand and the instrument. FIG. **1** shows the hand

position relative to the instrument handle. A jaw clamping lever **22** is shown in FIG. **1** pivotally attached at the base of the handle. The lever **22** actuates a slider (not shown in FIG. **1** but shown in FIG. **2**) that controls a tool actuation cable that extends from the slider to the distal end of the instrument. FIG. **1** also shows a jaw release button **96** that is located on the inside of the handle **12** just above the pivot for the jaw clamping lever **22**. As will be described in more detail hereinafter, the button **96** engages the slider in a ratcheting action until released by pushing on it as indicated by the arrow M shown in FIG. **3**.

[0054] The shape of the handle allows for a comfortable substantially one-handed operation of the instrument as shown in either FIG. **1** or FIG. **2**. As shown in FIG. **1**, the surgeon may grip the handle **12** between his palm and middle finger with the horn **13** nestled in the crook between his thumb and forefinger. This frees up the forefinger and thumb to rotate the rotation knob **24** using the finger indentions **31** that are disposed on the peripheral surface of the rotation knob. This arrangement also makes it possible to be able to push and pull on the rotation knob **24** to engage or disengage the angle locking means. FIG. **13** shows the rotation knob in its released position with it in its more distal position separated from the handle. FIG. **14** shows the rotation knob in its locked position having been moved proximally toward the handle. In both locked and unlocked positions the rotation knob is capable of controlled rotation to control axial rotation at the tip of the instrument about axis P.

[0055] The jaw clamping lever **22** may be engaged by the ring and/or pinky fingers of the surgeon and has at least two indents to accommodate these fingers as shown in FIG. **1**. When the surgeon wishes to release the clamped jaws, those two fingers are removed from the lever **22** and one or both of them can then be used to depress the jaw release button **96**. A return spring **82** in the handle (FIG. **2**) opens the jaws and returns the lever **22** to its relaxed position upon activating the release button **96**.

[0056] A second preferred embodiment of the instrument is shown in FIG. **2**. Further details of this instrument are shown in FIGS. **3-16**. In this embodiment an alternate jaw clamping lever **22'** is shown. In this version there is provided a fingertip engaging recess in a gimbaled ball **27** instead of two finger indentions. The free end of the lever **22'** supports the gimbaled ball **27** which has a through hole or recess **23** which receives one of the fingers of the user. The ball **27** is free to at least partially rotate in the lever end. The surgeon may grip the handle between the palm, ring and pinky fingers with the horn **13** nestled in the crook between his thumb and forefinger and operate the rotation knob **24** as previously described. The surgeon may then operate the jaw clamping lever **22'** with the forefinger or middle finger as shown in phantom outline in FIG. **2**.

[0057] FIG. **2**A illustrates an alternate preferred embodiment of the finger gimbal arrangement in a cross-sectional view. This is also in the form of a ball in a socket, in which the ball is free to be rotated in the socket, and in which the socket is defined in the lever free end. In this embodiment, rather than having the hole go completely through the ball there is provided a blind hole **23'** in the ball **27'**. The ball is free to rotate in the lever end and thus the ball can also be rotated to alternate positions corresponding to either a left-handed or right-handed user. The blind hole enables the user to have a firmer grip of the lever and thus enhanced control of the lever action.

[0058] In the first embodiment the lever **22** can be controlled primarily by pressing inwardly on the lever. However, in the second embodiment as illustrated in FIG. **2**, the surgeon can have greater control of the lever **22'**, as this arrangement allows the surgeon to push or pull the lever precisely rather than just a pull and release action. In the embodiment in FIG. **2** the surgeon can use the pinky or ring finger to squeeze the jaw release button **96** to disengage the ratchet mechanism and thus release the tool. In another version of the invention the return spring **82** may be eliminated in order that the jaws may be operated entirely under the control of, for example, the index or forefinger disposed in the recess **23**. This version of the invention is most advantageous when using an end effector such as scissors, whereas the embodiment shown in FIG. **1** would be best utilized with an end effector such as a needle driver or clamp.

[0059] Reference is now made to FIGS. **2-16** for further details of the second embodiment of the invention. In this embodiment the distal bending member **20** is shown without the sheath **98** so as to provide the details of the distal bendable member **20**. The distal bendable member is shown as comprised of spaced discs **110** that define therebetween the spaced slots **112**. Ribs **111** connect between adjacent discs **110** in a manner similar to that described in the afore-mentioned U.S. application Ser. No. 11/185,911.

[0060] As indicated previously, the end effector or tool **16** is actuated by means of the jaw actuation means **30** which is comprised primarily of the elongated lever **22'**. The lever **22'** is supported from the housing at the lever pivot pin **72**. Refer to FIGS. **2** and **3**. The closing of the lever **22'** against the handle **12** acts upon the slider **28** which is used to capture the very proximal end of the actuation cable **38**. When the slider **28** is in the position depicted in FIG. **2**, it is noted that the end effector jaws are fully open. See also FIG. **4**A. In that position the slider **28** is disposed at the more distal end of the slideway **84**. The slideway **84** is part of the internal support in the handle **12**. When the slider **28** is moved proximally, as depicted in FIG. **3**, then the jaws **44** and **46** are moved toward a closed position. In FIG. **3** the jaws are illustrated as closing so as to grasp a needle **45**. See also FIG. **4**B. In that position the slider **28** has moved to the more proximal end of the slideway **84**. FIG. **3** shows the distal end of the slider spaced the dimension D**1** from an end wall of the slideway **84**. FIG. **2**, on the other hand, shows the slider contacting that same end wall.

[0061] The instrument shaft **14** includes an outer shaft tube **32** that may be constructed of a light weight metal material or may be a plastic material. The proximal end of the tube **32** is received by the adaptor cover **26**. The distal end of the tube **32** is secured to the distal bendable member **20**. Within the outer shaft tube **32** there is provided a support tube **34** that is preferably constructed of a plastic material. Tube **34** extends between the distal bendable or flexible member **20** and the proximal bendable or flexible member **18**. The jaw actuator cable **38** extends within this support tube **34**. The support tube **34**, as depicted in FIG. **3**, supports along its length a plurality of spacers **36**. There are preferably multiple spacers disposed along the support tube **34**. Each of the spacers **36** is preferably evenly spaced and each may be provided with diametric guide slots (not shown). There may be four such guide slots disposed at 90 degree intervals about each spacer **36** for accommodating the respective cables.

[0062] Refer also now to FIGS. **4**A-**4**D for further details of the tool end of the instrument. The end effector **16** is com-

prised of a pair of jaws **44** and **46**. As indicated previously these jaws may be used to grasp a needle **45** or other item. The upper jaw **44** fits within a channel **47** in the lower jaw **46**. A pivot pin **48** is used between the jaws to enable rotation therebetween. A translation pin **42** extends through the slot **50** of jaw **46** and the slot **52** of jaw **44** and engages with the hole in the distal cable end connector **40**. The connector **40** is secured to the very distal end of the jaw actuator cable **38** and is positioned within a channel of the jaw **44**. When the lever **22'** is in its rest position, as depicted in FIG. **2**, the jaws are fully open. In that position the pin **42** is at a more distal location maintaining the jaws in an open position. As the cable **38** is pulled, such as proximally in FIG. **3**, then the pin **42** moves to the right in the slots **50** and **52** causing the jaws **44** and **46** to pivot toward a closed position.

[0063] FIGS. **4**A-**4**D also depicts an end wall or plate **54** of the jaw **46**. One end of the distal bendable member **20** is urged against this end wall **54**. The member **20** may be secured to the wall **54** by an appropriate means. In one embodiment, the cabling tension itself of the instrument holds the members together. On the end wall **54** there are disposed a pair of anchors **56** and **58** for the flex control cables **100**. FIG. **4**D illustrates four such cables **100**. The distal end of the distal bendable member **20** may be provided with pockets for receiving the anchors **56** and **58**. The anchors **56** and **58** are firmly attached to the end wall **54**.

[0064] The jaw actuator cable **38** terminates at its respective ends at the end effector and the rotation barrel **66** (see FIG. **3**). Within each of the bendable sections or bendable members **18** and **20** there is provided a plastic tube. This includes a distal tube **60** and a proximal tube **62**. Both of these tubes may be constructed of a plastic such as polyethylether-keytone (PEEK). The material of the tubes **60** and **62** is sufficiently rigid to retain the cable **38** and yet is flexible enough so that it can readily bend with the bending of the bendable members **18** and **20**. The tubes have a sufficient strength to receive and guide the cable, yet are flexible enough so that they will not kink or distort, and thus keep the cable in a proper state for activation, and also defines a fixed length for the cable. The tubes **60** and **62** are longitudinally stiff, but laterally flexible.

[0065] FIG. **4**A depicts the jaws in a fully open position. FIG. **4**B depicts the jaws grasping a needle. FIG. **4**C depicts the jaws fully closed. FIG. **4**D is a cross-sectional view taken along line **4**D-**4**D of FIG. **4**C.

[0066] The proximal bendable member **18** may also be constructed as a unitary or uni-body slotted structure including a series of flexible discs **130** that define therebetween slots **132**. A "unitary" or "uni-body" structure may be defined as one that is constructed for use in a single piece and does not require assembly of parts. Connecting ribs **131** may extend between adjacent discs. Clearance holes are provided in the discs and/or ribs for accommodating the four bend control cables **100**. The proximal bending member **18** also has four additional passages for the locking cables **160** and a conical distal end portion **19**. The conical portion **19** is provided with four recesses **163** (FIGS. **13** and **15**) for cable anchors **162** for cables **160**. The conical portion **19** also has four guide grooves **107** that match up with four guide grooves **106** in the adapter **26** (FIG. **15**) to channel the bending cables **100** to the outer shaft **32**. The rotation knob **24** houses an insert collar **104** which in turn seats the proximal end of the proximal bending member.

[0067] Both of the bendable members preferably have a rib pattern in which the ribs (**111**, **131**) are disposed at a preferred 60 degree variance from one rib to an adjacent rib. This has been found to provide an improved bending action. It was found that by having the ribs disposed at intervals of less than 90 degrees therebetween improved bending was possible. The ribs may be disposed at intervals of from about 35 degrees to about 75 degrees from one rib to an adjacent one. By using an interval of less than 90 degrees the ribs are more evenly distributed. Refer to FIG. **7** for an illustration of ribs at 60 degrees to each other. As a result the bending motion is more uniform at any orientation. In the present invention both of the bendable members may be made of a highly elastic polymer such as PEBAX (Polyether Block Amide), but could also be made from other elastic and resilient materials.

[0068] The handle **22'** in FIG. **2** is shown in the lowermost position which is considered as the "at rest" position. This would be achieved by either action of the return spring **82** in the bore **80** of the slide **28** in certain instruments or by the surgeon manually moving the lever to that position in other embodiments of the instrument where a return spring is not desired.

[0069] FIG. **3** illustrates the lever **22'** passing through a slot **73** in the handle and being mounted to a pivot pin **72**. An arm **70** of the lever **22'** has a cylindrical head **71** which mates with a recess **74** in a boss **75** at the proximal end of the slider **28**. The slider **28** sits in the slideway **84** and moves proximally and distally in response to the lever position and/or return spring action. The slider **28** carries a rotatable barrel **66** clamped to the push/pull cable **38** by means of a set screws **67**. The barrel **66** is rotatable in response to the rotation of the instrument shaft and end effector. Refer also to FIG. **5** for further details of the slider mechanism. The barrel **66** sits in a slot **68** which is open to contiguous slot **78** at one end and is closed by a wall **69** at its other end. The wall **69** has a through hole which acts as a guide for the push/pull cable **38** that protrudes from the proximal end of the barrel **66**, and thus guides the barrel action itself. The barrel **66** is urged against the wall **69** by a compression spring **76** that is disposed in the slot **78**. The position of the lever, as depicted in FIGS. **2** and **5** has the jaws fully open as also shown in FIG. **4**A.

[0070] As the lever is squeezed toward the handle, the slider **28** is urged proximally against the pressure of the return spring **82** which is a compression spring; that is if one is used. The lever **22'** is shown in three different positions in FIG. **3**. The position of FIG. **2** is shown in FIG. **3** by the lowermost phantom lines. The middle position, also shown in phantom lines, is approximately the position where the slider **28** has traveled a distance D**1** (in FIG. **3**) and that the moveable jaw **44** has contacted an item such as the needle **45**. This is the position of the slider **28** shown in FIG. **5** and with the jaws shown in the position in FIG. **4**B grasping the item. From that position, further movement of the slider **28** proximally results in the barrel **66** sliding distally relative to the slider, thus lifting off the end wall **69** defined by the slot **68**. See the dimension D**2** in FIG. **3**. This action causes the spring **76** to apply jaw clamping pressure on the needle, by further tensioning the cable **38**. When that position is reached, the barrel **66** and cable **38** substantially cease linear movement but the lever **22'** can be fully squeezed until the position shown in full line in FIG. **3** is reached. At that position, as depicted in FIG. **3**, the stop **29** on the lever **22'** contacts the handle **12** and the slider **28** stops just short of the end wall of the slideway **84**, imposing a maximum pressure on the needle.

[0071] A ratcheting action between the release button **96** and the slideway **84** prevents the slider **28** from any return motion until the release lever or button **96** is pushed. The release button **96** is mounted on a pivot pin **90** and has a pawl **94** that engages the teeth **86** on underside of the slider **28**. The pawl **94** is urged into contact with the teeth on the slider **28** by means of an integral leaf spring **92**. The thickness t (FIG. **4**B) of an item grasped by the jaws is adjusted for by the sliding action of barrel **66**. The distance D**2** shown in FIG. **3** is determined by the thickness t or in other words is a direct function of the thickness t. This dimension also accommodates any proximal movement of the cable **38** when the knob **24** is pulled back to lock in the angle of the bendable members.

[0072] FIG. **3** shows the surgical tool grasping an item such as a needle and shows the end effector being bent at an angle B**2** in response to the handle being bent at angle B**1** to the instrument shaft. The resulting tilt of the universal ring **142** of the angle locking means **140** is also shown but the cables **160** that control the tilt are not shown for simplicity as they lie in a plane behind the cables **100** illustrated in FIG. **3**. The cables **160** and their connections are shown in detail in FIGS. **13-16**.

[0073] The proximal bending member **18** has discs **130**, slots **132** and connecting ribs **131** similar to the previous instrument but has four additional passages for respective cables **160** and a conical distal end portion **19** with four recesses **163** for cable anchors for cables **160**. The conical portion has four elongated guide grooves **107** that match up with four like guide grooves **106** in the adapter **26**. These matching grooves form a channel for capturing the bending cables **100** as they extend from the proximal bendable member into the outer shaft **32**.

[0074] The rotation knob **24** houses an insert collar **104** which in turn seats the proximal end of the proximal bending member **18**. The rotation knob **24** and collar **104** have mating features for engagement therebetween so that they rotate together. The rotation knob **24** has diametrically disposed internally facing ridges **25** which engage matching mating channels **105** in insert collar **104**, as most clearly shown in FIG. **15**. During assembly, the cables **100** which protrude from the proximal end of the proximal bending member **18**, after the assembly of the end effector **16**, inner and outer shafts **32**, **34**, adapter **26** and proximal bending member **18**, are passed through the four terminal wire crimps or lugs **102** which are keyed into passages in the insert collar **104**. The cables are tensioned and crimped and excess cable material is trimmed off. This arrangement holds all the elements together between the end effector **16** and insert collar **104** and, in turn, the rotation knob **24**.

[0075] The locking cables **160** are anchored distally at **162** at the distal end of the proximal bending member and pass through passages in the proximal bending member and the insert collar **104**, as shown in the cross-sectional view of FIG. **13**. The cables then pass through passages in the rotation knob **24** and terminate at **164** at the universal ring **142**. The insert collar **104** and rotation knob **24** are mated together by means of the ridges **25** and channels **105**. The locking cables **160** are tensioned and anchored proximally at terminating end **164** and excess cable material is trimmed off.

[0076] The rotation knob **24** has a central aperture into which a cone plunger **180** passes. The cone plunger **180** has a hub **184** at its distal end which is captured between the rotation knob **24** and insert collar **104**. The retaining ring **186** holds the plunger **180** relative to the rotation knob **24**. Refer to FIGS. **5**, **8** and **13**. Mounted over the cone plunger **180** is an expansion sphere **144** which in turn carries the rider **148** and universal ring **142**. The universal ring **142** is held on the rider **148** by a retaining ring **150** as best seen in FIGS. **13-16**. It is the relative axial movement between the cone plunger **180** and the expansion sphere **144** that provides the basic locking action and it is the axial transition of the rotation knob **24** that initiates this action.

[0077] The expansion sphere **144** has preferably eight partially spherical petals **146** at the end of a main shank **152**. Refer also to the cross-sectional view of FIG. **9** for an illustration of the petals **146**. The eight petals **146** form an expandable sphere with a conical cavity in the center shaped to accommodate the cone plunger **180**. The expansion sphere **144** is adapted for limited axial sliding within the handle housing upon engagement with the cone plunger **180**, but with no rotation between the expansion sphere **144** and the handle. The expansion sphere **144** is adapted to move only a slight distance axially, and in another embodiment may be supported so that it is axially fixed in position. The expansion sphere **144** is provided with interlock means with the handle **12**. The shank **152** of the expansion sphere **144** has two mating means in the form of keys **156** that align with mating keyways **157** on the sides of a passage **168** through wall **166** of handle **12**. This interlocking allows the expansion sphere **144** to slide in and out of the handle **12** axially, but without rotating.

[0078] At the proximal end **154** of the shank **152** there are two opposed flexible fingers **158** that interact with retention means **194** on the handle to effect the locking and releasing of the conical ramped surface **182** within the conical cavity of the sphere. Basically, pulling on the knob **24** toward the handle pushes the cone plunger **180** into the expansion sphere **144**. This action in turn causes the proximal end **154** of the shank **152** to contact the wall **196**. Retaining ring **150** may act as a thrust washer in this respect. The spring arms **190** of the fingers **158** are urged outwardly by the cone shaped ramped surface **188**, as seen in FIG. **14**. This causes a ratcheting action at **194**. There is an elastic band **192** to help retract the fingers **158** when the knob **24** is pushed forward (distally) once the fingers **158** move off of the ramp surface **188**.

[0079] FIGS. **13** & **14** illustrate the locking action. FIG. **13** shows the "at rest" position of the angle locking means **140** and FIG. **14** shows how the cables **160** push and pull the universal disc in response to the bending of the proximal bending member and also shows the knob **24** pulled back, as illustrated by the arrow S. The resulting expansion by the plunger is illustrated by the arrows E that exerts a force that bears upon the inside of the rider **148** and hold it tightly in place while allowing the universal disc **142** to rotate freely around the raceway formed by the rider **148** and the retaining ring **150**.

[0080] The locking mechanism that is described herein is in the form of a follower mechanism **140** that is disposed proximally of the rotation knob. The proximal motion member comprises a proximal bendable member and a plurality of locking cables **160** that intercouple between the follower mechanism and the proximal bendable member. In the present invention the locking occurs by means of the use of a separate follower member illustrated as locking mechanism **140**. This follower mechanism operates in conjunction with lock cables **160** to lock a particular position of the proximal bendable member, and by doing so also locking the position

of the distal bendable member, as the proximal and distal bendable members are interconnected by actuation cables **100**.

[0081] The locking mechanism **140** includes, inter alia, the anchor ring **142** that provides the primary support for the locking cables **160**, as well as the support of the locking mechanism from the rotation knob structure. In this regard, the anchor ring **142** includes diametrically disposed pins **172** that are accommodated in elongated slots **174** of the opposed rearwardly extending fingers or arms **170**. Refer in particular to FIGS. **15** and **16**. The fingers **170** extend from the rotation knob barrel. This pin and slot arrangement enables the locking mechanism **140** to move with the bending and rotation action.

[0082] When the instrument illustrated in this embodiment is in a straight in-line position then the locking mechanism, and particularly the anchor ring **142** extends substantially transverse to the center axis, as shown in FIG. **13**. When the handle **12** is bent, such as in the positions shown in FIG. **14** then it is noted that the follower locking mechanism **140** tilts relative to the longitudinal axis T. When it is desired to lock the mechanism in a particular bent condition then the rotation knob is moved proximally (position of FIG. **14**), the cone plunger **180** engages the expansion sphere **144** and this locks the position of the anchor ring **142** and thus also locks the position of the locking or anchor cables **160**. This, in turn, locks the position of the proximal bendable member **18** and via the cables **100** also locks the position of the distal bendable member **20**. The rigidity of the locking cables **160** maintains the proximal bendable member **18** in the locked position. The cables **160** are preferably substantially larger in diameter than the actuation cables **100** and are thus more rigid than the actuation cables.

[0083] Each of the cables **160** are disposed 90 degrees apart, as are the bent cables **100**. Refer to FIG. **7** for an illustration of the placement of these cables. It is noted that the cables **160** are disposed 45 degrees to the cables **100**. This 45 degree different position is illustrated in FIGS. **7**, **8** and **16**. The distal end of each cable **160** terminates at lug end **162**. As indicated previously, the proximal end of each cable **160** terminates at lug **164**. A spring or resilient member may be associated with each termination **164**, but is not preferred. Rotation of the rotation knob **24** causes rotation of the entire proximal bendable member and the locking mechanism **140**.

[0084] The locking mechanism **140** includes, in addition to the anchor ring **142**, the rider **148** and the retaining ring **150**. Fastening screws or the like may be used for securing together the rider **148** and the retaining ring **150** about the expansion sphere **144** as illustrated in FIGS. **13** and **14**. FIG. **3** is a cross-sectional view of the instrument of this embodiment with the handle bent at an angle B**1** which causes a corresponding bending at the distal end of the instrument at an angle B**2** to the longitudinal shaft axis. In this embodiment the instrument can also be controlled in any direction including directions in and out of the plane of the paper. It is noted that the handle is bent downwardly causing a corresponding bending upwardly of the distal end of the instrument. As indicated previously the cable lengths of the cables **160** are the same and thus when the handle is bent in the manner illustrated in FIG. **3** the locking mechanism **140** tilts relative to axis T and essentially follows the positioning of the proximal bendable member. The locking mechanism **140** has the ability to tilt at any angle, can be controlled to lock the cables **160** and thus the end effector position, but is able to rotate with rotation of the knob **24**.

[0085] FIG. **14** illustrates the same instrument illustrated in FIG. **13** but with the handle now tilted upwardly so as to provide a corresponding downward tilting at the distal end of the instrument. It is also to be noted that, with this direction of position of the handle, the follower mechanism **140** tilts in the opposite direction to that illustrated in FIG. **3**. In the illustrative position of FIG. **14** with the instrument locked the distal part of the instrument can be rotated via the rotation knob **24**. This is because, even though the rider **148** is essentially locked with the expansion sphere **144**, the universal ring **142** is free to rotate upon rotation of the rotation knob **24**. In this locked position the universal ring **142** rotates in its own plane. The rotation causes the distal end of the instrument to rotate the tip (end effector) about a distal tip axis such as shown by the axis P in FIG. **3**. The rotation occurs effectively even though the instrument is locked as to its position. In other words the orientation of the instrument can be changed by rotating the knob **24**, even though its position is fixed.

[0086] The instrument of the present invention provides an improved instrument, particularly from the standpoint of ease of use by the surgeon. The lever arrangement permits fine control by the user, particularly the embodiment that has the recess gimbal arrangement where the finger of the user can be engaged with the lever. Another feature is the combination of use of the rotation knob so that it functions, not only for rotation of the distal tip of the instrument, but also functions as the means by which the instrument can be locked in a particular position. This includes the preferred axial displacement of the rotation knob to perform the locking function. In an alternate embodiment of the present invention the rotation knob may move distally to lock rather than proximally by rearranging the plunger and expansion sphere. In another version of the present invention another form of rotation mechanism may be used such as a slide mechanism to control distal rotation about the tool tip axis. A locking function is still associated with such an arrangement, such as by depressing the slide mechanism to provide the lock function.

[0087] Having now described a limited number of embodiments of the present invention it should now be apparent to one skilled in the art that numerous other embodiments and modifications are contemplated as falling within the scope of the present invention as defined by the appended claims.

What is claimed is:

1. A surgical instrument comprising:

an instrument shaft having proximal and distal ends;

a tool disposed from the distal end of the instrument shaft;

a control handle disposed from the proximal end of the instrument shaft;

a distal motion member for coupling the distal end of said instrument shaft to said tool;

a proximal motion member for coupling the proximal end of said instrument shaft to said handle;

actuation means extending between said distal and proximal motion members for coupling motion of said proximal motion member to said distal motion member for controlling the positioning of said tool;

a rotation knob disposed adjacent the control handle and rotatable relative to the control handle for causing a corresponding rotation of the instrument shaft and tool;

and a locking mechanism for fixing the position of the tool at a selected position and having locked and unlocked states;

said rotation knob having a first position in which the locking mechanism is controlled to be in its locked state and a second position in which the locking mechanism is released to its unlocked state so as to allow tool positioning.

2. The surgical instrument of claim **1** wherein at least said proximal motion member comprises a proximal bendable member and said rotation knob is adapted to rotate the tool about a distal tool roll axis.

3. The surgical instrument of claim **1** wherein said control handle comprises a pistol grip handle having an engagement horn to assist in holding the handle.

4. The surgical instrument of claim **3** wherein said rotation knob is disposed at the distal end of the handle and said horn is disposed proximally of the rotation knob and on the top of the pistol grip handle.

5. The surgical instrument of claim **3** including an actuation lever supported from said pistol grip handle at a pivot point at the proximal end of the handle.

6. The surgical instrument of claim **5** wherein said actuation lever has a free end with a finger loop for receiving a users finger to control the lever.

7. The surgical instrument of claim **5** further including a release button on the handle in juxtaposition to said lever and for releasing the lever from an actuated to released position.

8. The surgical instrument of claim **1** wherein the rotation knob is supported relative to the handle so as to rotate about a rotation knob axis, and wherein said rotation knob is moved axially from the first to second positions.

9. The surgical instrument of claim **8** wherein the rotation knob is moved toward said handle to activate the locking mechanism and is moved away from the handle to release the locking mechanism.

10. The surgical instrument of claim **1** including a tool actuation cable that extends from said tool to said handle, a slider for capturing the proximal end of said tool actuation cable and an actuation lever supported at said handle for controlling the translation of said slider.

11. The surgical instrument of claim **10** including a slideway for receiving said slider, a pair of springs disposed in said slider and a rotational barrel disposed between said springs and for holding the proximal end of said tool actuation cable.

12. The surgical instrument of claim **1** wherein said locking mechanism comprises a follower mechanism disposed proximally of said rotation knob, said proximal motion member comprising a proximal bendable member and a plurality of locking cables that intercouple between said follower mechanism and said proximal bendable member.

13. The surgical instrument of claim **12** wherein said locking mechanism further comprises an expandable sphere for supporting said locking cables and a plunger engaging with a center passage of said expandable sphere, said plunger supported from said rotation knob.

14. A surgical instrument comprising:

an instrument shaft having proximal and distal ends;

a tool disposed from the distal end of the instrument shaft;

a control handle disposed from the proximal end of the instrument shaft;

a distal motion member for coupling the distal end of said instrument shaft to said tool;

a proximal motion member for coupling the proximal end of said instrument shaft to said handle;

actuation means extending between said distal and proximal motion members for coupling motion of said proximal motion member to said distal motion member for controlling the positioning of said tool;

said control handle including a pistol grip handle;

and an actuation lever for controlling said tool and pivotally supported from said handle;

said actuation lever having a free end with a recess for receiving a finger of the user to control the actuation lever.

15. The surgical instrument of claim **14** including a ball supported in a socket at the free end of the actuation lever, said ball having a hole therein that defines said finger recess.

16. The surgical instrument of claim **15** wherein said ball is freely rotatable in said socket and said hole is a through hole.

17. The surgical instrument of claim **15** wherein said ball is freely rotatable in said socket and said hole is a blind hole.

18. The surgical instrument of claim **15** further including a release button on the handle in juxtaposition to said lever and for releasing the lever from an actuated to released position.

19. The surgical instrument of claim **15** including a rotation knob disposed adjacent the control handle and rotatable relative to the control handle for causing a corresponding rotation of the instrument shaft and tool, and a locking mechanism for fixing the position of the tool at a selected position and having locked and unlocked states, said rotation knob having a first position in which the locking mechanism is controlled to be in its locked state and a second position in which the locking mechanism is released to its unlocked state so as to allow tool positioning.

20. The surgical instrument of claim **19** wherein the rotation knob is supported relative to the handle so as to rotate about a rotation knob axis, and wherein said rotation knob is moved axially from the first to second positions.

21. The surgical instrument of claim **14** further including an engagement horn to assist in holding the handle and wherein said rotation knob is disposed at the distal end of the handle and said horn is disposed proximally of the rotation knob and on the top of the pistol grip handle.

22. In a medical instrument having a proximal control handle and a distal tool that are intercoupled by an elongated instrument shaft that is meant to pass internally of an anatomic body, proximal and distal movable members that respectively intercouple said proximal control handle and said distal tool with said instrument shaft, cable actuation means disposed between said movable members, said control handle having proximal and distal ends, an actuation lever for controlling said distal tool, means for pivotally supporting said actuation lever from the proximal end of said handle at one side thereof, a horn and means for fixedly supporting said horn from the distal end of said handle at an opposite side thereof.

23. The medical instrument of claim **22** including a locking means that is manually operable by a user and that includes a follower the position of which is responsive to the position of said movable members.

24. The medical instrument of claim **22** including a rotation knob disposed adjacent the control handle and rotatable relative to the control handle for causing a corresponding rotation of the instrument shaft and tool, and a locking mechanism for fixing the position of the tool at a selected position and having locked and unlocked states, said rotation knob having a first

position in which the locking mechanism is controlled to be in its locked state and a second position in which the locking mechanism is released to its unlocked state so as to allow tool positioning.

25. The medical instrument of claim **24** wherein the rotation knob is supported relative to the handle so as to rotate about a rotation knob axis, and wherein said rotation knob is moved axially from the first to second positions.

26. The medical instrument of claim **22** wherein said control handle includes a pistol grip handle and said actuation lever has a free end with a recess for receiving a finger of the user to control the actuation lever.

27. The medical instrument of claim **26** including a ball supported in a socket at the free end of the actuation lever, said ball having a hole therein that defines said finger recess.

28. The medical instrument of claim **22** including a rotation control member at the distal end of said handle, said horn disposed adjacent to said rotation control member, said actuation lever supported for movement toward and away from said handle.

29. The medical instrument of claim **28** further including a release button on the handle in juxtaposition to said lever and for releasing the lever from an actuated to released position.

30. The medical instrument of claim **29** including a slider in said handle for controlling a tool actuation cable, said lever including a pivot point attached to said handle and disposed between one end that defines a socket for a rotation gimbal for accommodating the user's finger and another end that engages said slider.

* * * * *