United States Patent [19]

Larsson

[11] **Patent Number: Des. 286,740**

[45] **Date of Patent: ** Nov. 18, 1986**

[54] **PROTECTIVE COVER FOR LOW VOLTAGE EQUIPMENT**

[75] Inventor: **Arne Larsson**, Örebro, Sweden

[73] Assignee: **Svagströms Montage HB**, Örebro, Sweden

[**] Term: **14 Years**

[21] Appl. No.: **591,868**

[22] Filed: **Mar. 21, 1984**

[30] **Foreign Application Priority Data**

Sep. 26, 1983 [SE] Sweden 83-2467

[52] **U.S. Cl.** **D8/353;** D13/30

[58] **Field of Search** ..... D13/40–41, D13/30, 24, 13; 200/293–294, 297, 302.1, 302.2, 333–334; 174/50, 52 R, 53, 58–60, 65 R, 66–67; 361/331–332, 334, 346–347, 350, 356, 380, 390–392, 394; 220/3.2, 3.3, 241–242; D8/350, 353

[56] **References Cited**

U.S. PATENT DOCUMENTS

D. 221,083	7/1971	Kahn	D13/37
D. 240,235	6/1976	Bunnell	D13/30
D. 257,424	10/1980	Sotolongo	D13/30
D. 261,135	10/1981	Horne	D13/30
D. 262,618	1/1982	Holce et al.	D13/32
D. 280,485	9/1985	M'Sadoques et al.	D13/34
4,558,172	12/1985	Zetena	174/66

Primary Examiner—Wallace R. Burke
Assistant Examiner—Ruth Takemoto
Attorney, Agent, or Firm—Lowe Price LeBlanc Becker & Shur

[57] **CLAIM**

The ornamental design for a protective cover for low voltage equipment, as shown.

DESCRIPTION

FIG. **1** is a front perspective view of a protective cover for low voltage equipment showing my new design; and FIG. **2** is a rear perspective view thereof.

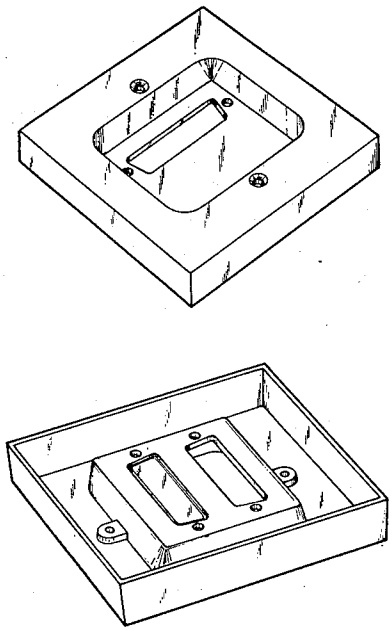

FIG.1

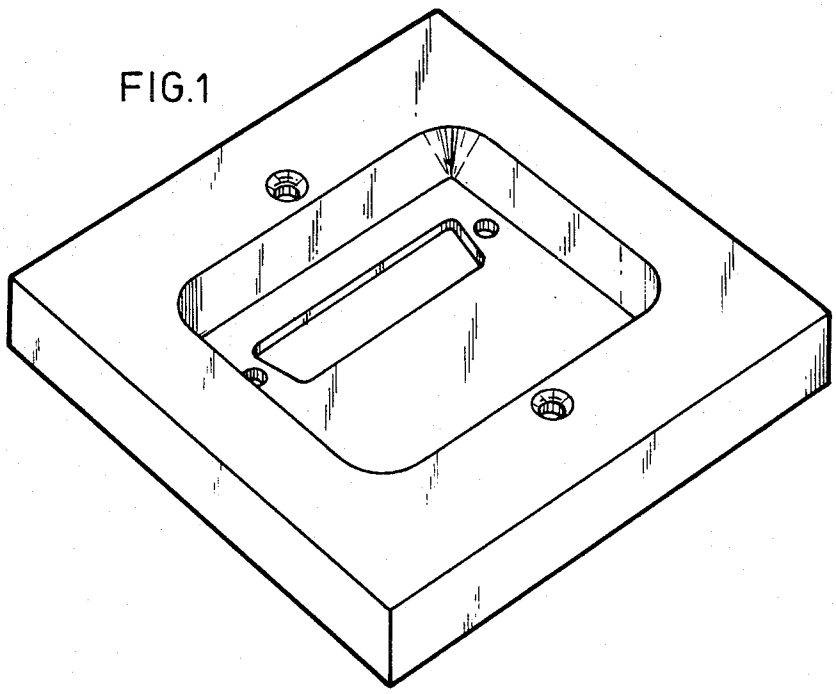

FIG.2

