April 30, 1940. P. HEINS 2,198,817

ROTARY PISTON MACHINE

Filed July 24, 1936 2 Sheets-Sheet 1

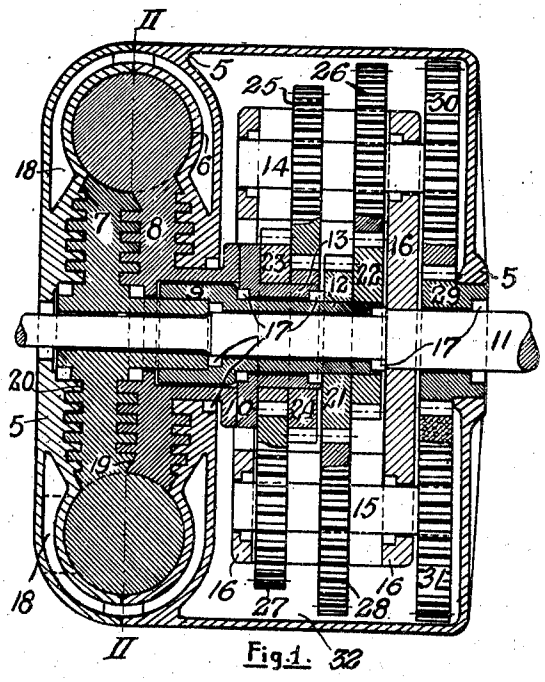

Fig. 1.

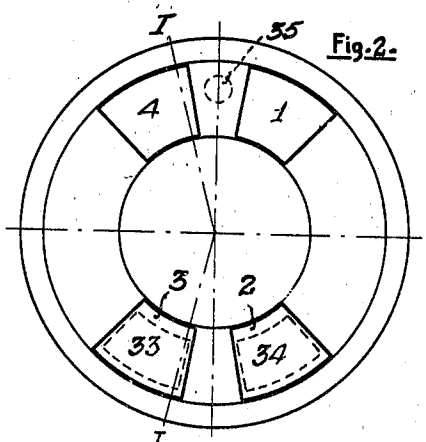

Fig. 2.

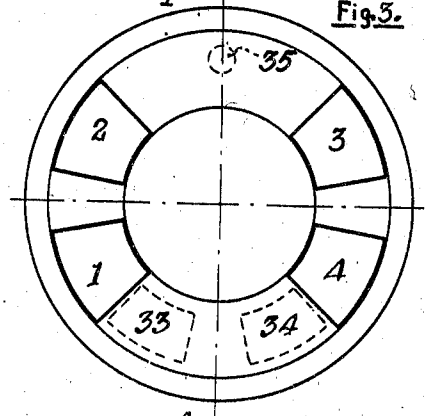

Fig. 3.

Inventor:
Paul Heins,
By [signature],
Atty.

April 30, 1940. P. HEINS 2,198,817

ROTARY PISTON MACHINE

Filed July 24, 1936 2 Sheets-Sheet 2

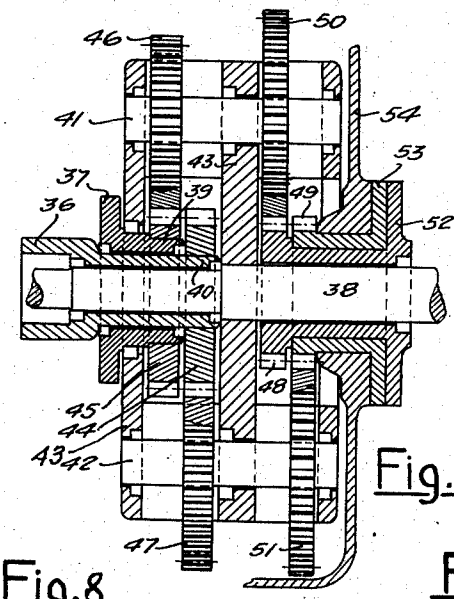

Fig. 7

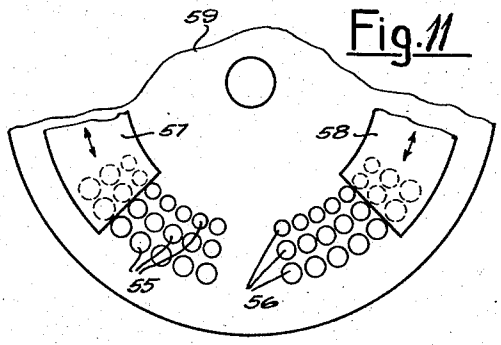

Fig. 11

Fig. 8

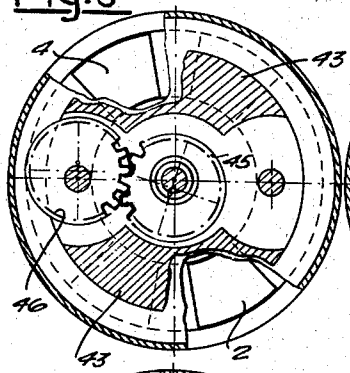

Fig. 9

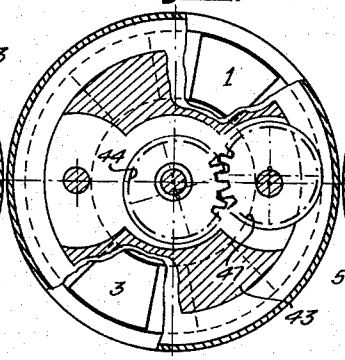

Fig. 10

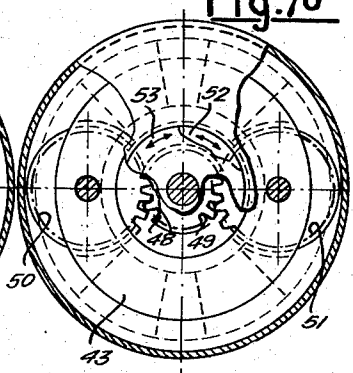

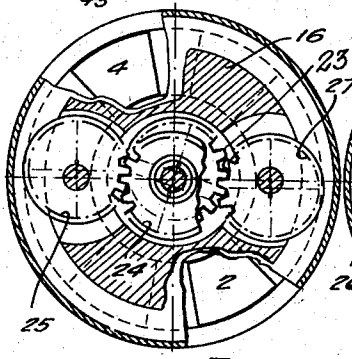

Fig. 4

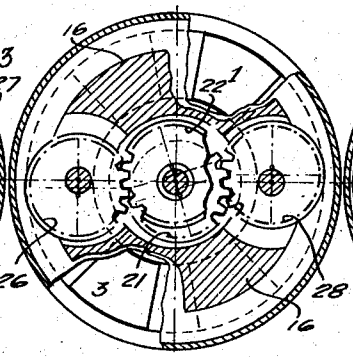

Fig. 5

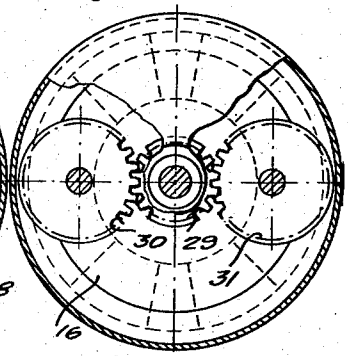

Fig. 6

Inventor:
Paul Heins
By [illegible]
Atty.

Patented Apr. 30, 1940

2,198,817

UNITED STATES PATENT OFFICE

2,198,817

ROTARY PISTON MACHINE

Paul Heins, Hamburg, Germany

Application July 24, 1936, Serial No. 92,343
In Germany August 2, 1935

4 Claims. (Cl. 103—129)

My invention relates to rotary machines which may be constructed as rotary combustion engines, rotary compressors, rotary pumps, and the like, and in which the pistons successively move or rotate in a casing at varying speeds alternately toward and away from each other being controlled in their movements by non-circular preferably elliptical toothed gear wheels operatively connected with said pistons.

The object of the present invention which more particularly concerns itself with internal combustion engines is to design an engine of this kind which will best answer all practical requirements.

According to this invention, I provide a plurality of successively rotating pistons, with which at least three eccentric, preferably elliptical toothed gear wheels are so connected that whenever two successive pistons have to assume their extreme positions, the effective lever arms of the toothed gear wheels, operatively connected, either directly or indirectly, with said pistons are of equal length. Preferably, as I have already stated, I use toothed wheels having the shape of an ellipse and which rotate about one focal point, or, in other words, move confocally. These elliptical wheels, which may have only a slight eccentricity, are carried by the piston-shafts and by counter shafts rotatably mounted in a separate cage. The latter and the rotating pistons are enclosed in a stationary casing, through which passes the main shaft and which preferably is made of two parts.

The arrangement is such that a state of balance is attained and only useful forces act on the main shaft and the gear wheels. A smooth combustion chamber is provided, and because of the track of the rotating pistons being completely surrounded by water, overheating can not occur. Because of their continuous travel, the pistons provide for a good distribution of the heat, since they only reenter the combustion zone after having moved through a considerable distance. The comparatively large inlet and outlet ports are controlled by the rotating pistons.

On the annexed drawings, on which I have, by way of illustration, diagrammatically shown two embodiments of an internal combustion engine involving the principles of my invention,

Fig. 1 is a section through a four-stroke internal combustion engine provided with four pistons, the section being taken along line I—I in Fig. 2. (It is assumed that the gearing has turned so far that the long principal axes of the elliptical toothed gears are in the plane of the drawings.)

Figs. 2 and 3 show the pistons in the extreme positions.

Figs. 4, 5 and 6, drawn to a smaller scale, are detail views showing the parts in various positions;

Fig. 7 is a sectional detail view.

Figs. 8, 9 and 10, drawn to a smaller scale, are further detail views showing the parts in various positions.

Fig. 11 is a broken-off view of a means for controlling the admission and exhaust ports.

Figs. 2 and 3 show the pistons in two extreme positions, the position shown in Fig. 2 being assumed to be the position, in which the pistons of each group are closest to each other, while Fig. 3 shows the same pistons after a rotation of 180°, the engine casing being opened along line II—II in Fig. 1. (Figs. 2 and 3 are drawn on a somewhat smaller scale than Fig. 1.)

Figs. 4, 5 and 6, drawn to a reduced scale, and in which portions are shown broken away, show the various positions of the toothed gear wheels at one of the extreme positions of the engine pistons. As shown, a symmetrical position of the countershafts bearing the gear wheels has been selected, and the engine pistons appearing through the broken portions belong to the elliptical toothed gear wheels shown in the particular figure. The three figures when superposed result in a picture of the entire engine, aside from some details of a practical embodiment.

Fig. 7 is a sectional view showing a particular modification of the gearing.

Figs. 8, 9 and 10, drawn like Figs. 4–6 to a reduced scale, show the various positions of the toothed gear wheels at one of the extreme positions of the engine pistons with reference to the modification shown in Fig. 7. As in Figs. 4, 5 and 6, a symmetrical position of the countershafts bearing the toothed gear wheels has been selected. The engine pistons visible through the broken out portions belong to the elliptical toothed gear wheels shown in the particular figures.

At 5 in Fig. 1 is shown a casing which is preferably made in two or more parts so that it can be opened to give access to the working parts enclosed therein. At 6 inside the casing is shown a circular track for the rotating pistons 1, 2, 3 and 4, of which pistons only 3 and 4 are visible in Fig. 1. The pistons which are arranged in pairs are carried by annular disks, one being shown at 7, which carries the pistons 1 and 3,

while the other shown at 8 carries the pistons 2 and 4. The pistons of each pair are offset relative to each other 180°, as shown in Figs. 2 and 3, so that the pistons of each pair are disposed diametrically opposite each other. Because of this arrangement, there always follows, in the tubular piston track 6, upon a piston of one pair a piston of another pair so that the piston track is always divided into four separate chambers or cylinders. At 11 is shown the main shaft extending through the center of casing 5 and being rotatably journalled in bearings not shown. By means of hollow shafts shown at 12 and 13, the annular disks 7 and 8 carrying the pistons are operatively connected with said main-shaft, which passes through hollow shaft 12, the latter in turn passing through hollow shaft 13. At 9 and 10 are shown elastic couplings, by means of which said hollow shafts are operatively connected with main shaft 11.

On hollow shaft 12 are confocally secured two elliptical toothed gear wheels 21 and 22, which, like the corresponding pistons 1 and 3 are relatively offset 180° and are secured to shaft 12 in a definite position relative to pistons 1 and 3. In a similar manner, two elliptical toothed gear wheels shown at 23 and 24 are secured to hollow shaft 13 also in a definite position relative to the pistons 2 and 4.

At 16 is shown a cage, which is secured to main shaft 11 and functions as a fly-wheel. In said cage are rotatably journalled two stub- or countershafts 14 and 15 being disposed diametrically opposite to each other as shown in Fig. 1. To the countershaft 14 are secured two elliptical toothed gear wheels 25 and 26 so as to mesh respectively with the elliptical toothed gear wheels 24 and 22. To countershaft 14 is moreover secured a circular toothed gear wheel shown at 30. To the other countershaft 15 are secured two elliptical toothed gear wheels 27 and 28 which mesh respectively with the elliptical toothed gear wheels 23 and 21. To shaft 15 moreover is likewise secured a circular toothed gear wheel shown at 31. At 29 is shown a circular toothed gear wheel which may be secured to the casing 5 in different rotatably adjusted positions relative thereto. The toothed gear wheels 30 and 31 are in mesh with this normally fixed toothed gear wheel 29, through which passes the main shaft 11. For the sake of symmetry, the eccentricity of all the elliptical toothed gear wheels is the same.

At 17 in Fig. 1 are shown roller- or ball-bearings, while at 18 is shown an annular space surrounding the piston track 6 and adapted for the circulation of cooling water. At 19 and 20 are shown sealing means, whereas at 32 is shown an oil trough in the bottom of casing 5. At 33 and 34 are shown inlet and outlet ports, while at 35 is indicated a spark plug.

Let it be assumed that in Fig. 2 the pistons occupy one of their extreme end positions, in which piston 4 has moved toward piston 1 and piston 3 has moved toward piston 2 as closely as permissible by the eccentricity of the corresponding elliptical toothed gear-wheels. This is the starting position of the engine. The fuel mixture has been compressed between the pistons 4 and 1 and will be ignited by the spark plug shown at 35.

Now, if it be assumed that the countershafts 14 and 15 remain in the same position relative to casing 5 and rotate about their axes through an angle of 180°, then the four pistons 1, 2, 3 and 4, if they rotate in clockwise direction, will for a given eccentricity of the elliptical toothed gear wheels move from the positions shown in Fig. 2 to the positions shown in Fig. 3, in which positions pistons 1 and 2 and 3 and 4 have moved as close to each other as possible, pistons 1 and 3 having rotated as many degrees more than 180° as pistons 2 and 4 have rotated less than 180°. Then, after the countershafts 14 and 15 have been rotated another 180°, that is to say, have made a complete revolution, the pistons again will have reached the positions shown in Fig. 2. Thus, every piston has made a rotation of 360°.

However, if the pistons are to be used, as in an internal combustion engine, to control the inlet and outlet ports, the position of the pistons relative to the casing as shown in Fig. 3 can not be used, since the spark plug as well as the inlet and outlet ports 33 and 34 indicated by the broken lines in Figs. 2 and 3 are fixed in the casing. Therefore, the control of these inlet and outlet ports and the timing of the ignition by the rotating pistons can be achieved if the countershafts 14 and 15 are permitted to rotate simultaneously with the pistons at a definite ratio relative thereto. It is for this purpose that on the two countershafts, in addition to the elliptical toothed gear wheels normal toothed wheels 30 and 31 respectively are secured, which as the cage 18 rotates roll over the stationary toothed gear wheel 29 (Fig. 1). By a proper selection of the number of teeth in the two toothed gear wheels 30 and 31 with regard to the points of inlet, exhaust and ignition, the required movement of the rotating pistons relative to casing 5 from and into the different working positions is obtained. By the fact that the countershafts, by reason of the construction referred to, are twice rotated, while the pistons rotate only once, four piston strokes are obtained, for in this way, the pistons are moved twice toward and away from each other during one complete rotation of the same. Whenever two successive pistons pass definite points of the casing, the said two pistons will at those points always be spaced the same distance from each other.

The elliptical toothed gear wheels 21, 22 and 23, 24, to enable the pistons to move toward and away from each other to the proper positions, must be secured to the piston shafts 12 and 13 respectively in a definite position relative to the pistons; they must, in other words, be adjusted relative to the pistons. This also applies to the elliptical toothed wheels 25, 26, 27 and 28 in mesh therewith and secured to the countershafts 14 and 15 respectively. The principle involved determines that the rotating pistons occupy their extreme end positions when the effective lever arms of the elliptical gear wheels secured thereto are of equal length. Or, in other words, if with respect to the operation of the engine, the maintenance of the prescribed relative piston spacings, their positions in the casing, the control of the inlet and outlet ports by the pistons, the ignition, etc. it is necessary for the pistons to assume their extreme end positions as shown in Fig. 2, that the effective lever arms of the corresponding elliptical toothed gear wheels 21, 22, 23 and 24 must be of equal length. It is essential that the elliptical toothed wheels 21 and 22, as has already been mentioned above, are offset relative to each other 180° and correctly mesh with the corresponding elliptical

gear wheels on the countershafts. The same, of course, applies to the elliptical toothed wheels 23 and 24.

As shown in Fig. 2, piston 4 has moved close to piston 1 while piston 2 has moved close to piston 3, as permitted by the selected eccentricity and the adjustment of the pistons relative to the corresponding elliptical toothed gear wheels 21—24. Pistons 4 and 1 have compressed a previously admitted fuel mixture, which is about to be ignited. Because of the advance of one piston relative to the other, the two pistons will move away from each other, and the first cycle commences. If the pistons move in clockwise direction, the working pressure between pistons 1 and 2 has expanded its force and these two pistons now are spaced away from each other as far as possible, and outlet port 34 will be opened, and the exhaust begins. Between pistons 2 and 3 the exhaust is completed, and outlet port 34 has been closed, while inlet port 33 is being opened to admit a fresh supply of fuel mixture. Between pistons 3 and 4, however, the drawing in of the fuel mixture has been completed, and inlet port 33 is now closed again. Piston 3 will move toward piston 4, the compression will start, and the same cycle will commence. When during the first cycle the pistons 4 and 1 effected the compression, pistons 3 and 4 will effect the compression during the following cycle, then pistons 2 and 3, and so forth, the pistons while rotating always giving up their place to the next succeeding piston. In Fig. 2, for example, the position of piston 1, when the same has moved to the position of piston 2 is taken by piston 4, whereas piston 3 will occupy the place of piston 4, etc. etc.

The movement of the rotating pistons and their proper relative positions in the casing are aside from the timing means controlled by the elliptical toothed wheels, and as has been stated before, when as shown in Fig. 2, two successive pistons, by reason of their corresponding elliptical toothed gear wheels have to assume their extreme positions, (see pistons 4 and 1 in Fig. 2 at or near the ignition point), the effective lever arms of the controlling elliptical toothed gear wheels are of equal length.

As shown in Fig. 1, there are provided for the shafts 12 and 13 which connect the rotating pistons or the annular disks carrying the same with the elliptical toothed gear wheels controlling the movement of the pistons intermediate couplings 9 and 10 which are elastic so as to receive and damp the shocks which occur in explosion engines, and also to allow for certain slight play relative to the elliptical toothed gear wheels. The said couplings also may be made adjustable, which permits the position of the pistons relative to their corresponding elliptical toothed gear wheels to be easily corrected.

By a simple interchange of the inlet and exhaust pipes, the direction of rotation of the pistons can be reversed. However, the construction can be so modified that each congruent group of pistons is connected by elliptical toothed gear wheels to a countershaft and each countershaft rolls independently on the casing. Such a modification is shown, for example in Figs. 7 to 10.

In Fig. 7, 36 and 37 designate two coupling members, which similarly to the showing of Fig. 1 must be connected with the corresponding coupling elements of the pistons or the annular disks carrying them. 36 is connected or formed with the hollow shaft 40, to which is secured at one of its focal points the elliptical toothed gear wheel 44. The coupling member 37 is connected or formed with the hollow stub-shaft 39, to which is secured at one of its focal points the elliptical toothed gear wheel 45. At 38 is shown the rotatable central main shaft to which is secured the cage 43. The latter is provided with peripherally adjustable bearings in which are journalled the two counter-shafts shown at 41 and 42, which besides being rotatable about their own axes also have a circumferential rotation about the main shaft. To the countershaft 41 is confocally secured an elliptical toothed gear wheel shown at 46, which meshes with the elliptical toothed gear wheel 45. To shaft 41 is further secured concentrically therewith a circular toothed gear wheel shown at 50, which is in mesh with and adapted to roll on a toothed circular gear wheel 48 adjustably secured to the casing 54. In a similar manner, an elliptical toothed gear wheel shown at 47 and secured to the countershaft 42 meshes with the elliptical toothed gear wheel 44, whereas a circular toothed gear wheel 51 concentrically secured to countershaft 42 meshes with and is adapted to roll on toothed circular gear wheel 49 rotatably adjustably secured to the casing 54. For the purpose of adjustment, the toothed gear wheels 48 and 49 are provided with outwardly projecting portions 52 and 53 respectively. By a simple rotary adjustment of the parts 52 and 53 and thereby of the gear wheels 48 and 49, as indicated by the two small arrows in Fig. 10, the compression ratio is easily varied. The adjustment, of course, must be exactly alike for both of the toothed gear-wheels 48 and 49 if the symmetric position of the pistons relative to the symmetrical lines of the surrounding casing as shown in the drawings shall be maintained.

The inlet and exhaust ports are preferably formed by groups or rows of holes. In this manner and by the ports being positioned outside the pressure zone proper the timing points either individually or conjointly can be readily varied even during the operation of the engine, which is accomplished by the closing of some of the holes. Such an arrangement is shown, for example, in Fig. 11, in which 59 denotes a portion of that part of the outer casing, in which the pistons rotate. The holes in the wall of the casing forming the ducts for connecting the interior of the casing with the outer parts, e. g. carburetor, exhaust pipe, etc. are shown in Fig. 11 at 55 and 56. They can be partially or entirely closed by slides shown at 57 and 58, which can be moved in either direction as indicated by the double arrows shown in Fig. 11. As shown in this figure, the two slides respectively time the opening of the outlet or exhaust port and the closing of the inlet or fuel admission port.

It may here once more be pointed out that the eccentricity of the elliptical toothed gear wheels is very slight, as will also appear from the drawings. In fact an eccentricity (e) of only 0.15 is required, the axes of the elliptical gear wheels having then the ratio of 1:0.988. Therefore, the deviation from the circular shape is extremely slight, and in engines with a greater number of pistons, it is even still less. Also I wish to point out that the elliptical toothed gear wheels are preferably secured to their respective shafts at one of their focal points and not centrally, as has been proposed heretofore.

For machines provided with confocally rotating elliptical gear wheels as in the embodiment

shown in the drawings, the eccentricty of the elliptical gear wheels may be calculated as follows:

The linear eccentricity

$$e = a\,tg\frac{h}{8}$$

Herein a is half the major axis of the ellipse, and $2a$ is to be regarded as determined constructionally by the size of the gear wheels, since this length is like the spacing of the axes of the shafts carrying the mutually engaging gear wheels. For h must be inserted the single stroke in angular degrees (360 degree division), the stroke (h) being the difference between the greatest and the smallest distance of the pistons from each other.

In the construction shown, all the rotating masses can be in themselves statically and dynamically balanced without the need of any dead auxiliary masses that increase the weight. Moreover, the engine delivers power in an ideal manner, because while the working pressure acts on one piston, compression pressure acts on the opposite piston so that a perfectly balanced state is obtained. This also favorably affects the sealing of the successive spaces, since only the differences of pressure have to be provided for. Prominent features are also the smooth combustion chamber, flat piston surfaces and short inlet and exhaust pipes without any branches, tho' the engine is a multichambered one and is operating like an engine having a plurality of cylinders. Overheating, either generally or locally, cannot occur since the piston track **6** is completely surrounded by a water- or air-cooled space **18**. Because of their continuous rotation, the pistons provide for a good distribution of the heat, since they re-enter the combustion zone only after they have travelled through a considerable distance. And, as has been already mentioned above, control of the comparatively large inlet and outlet (exhaust) ports is effected by the rotating pistons themselves.

For sealing the chambers of the engine, I prefer to use, as shown in the drawings, a combination of surfaces indicated at **19**, having a neat sliding contact with a modified kind of labyrinth sealing faces indicated at **20**, which is allowed as little radial play as possible, while it is allowed slightly more play in the axial direction whereby small spaces are formed in which the lubricating oil is trapped.

In the construction shown and described, four rotating pistons are provided set at an angle of 180°, two opposite pistons, therefore, being directly connected, so that four successive chambers, each two separated by a piston, are formed. Obviously, engines with six, eight or more pistons can be built.

While the construction above described and shown in the drawings is designed to be used as a four-stroke, four-cycle internal combustion engine having four pistons, it is obvious that a similar construction can also be used with suitable changes as a compressor, and my invention, therefore, is not limited to an embodiment of an internal combustion engine.

I claim:

1. In an engine of the character described, a circular cylinder having fluid inlet and outlet ports, a power shaft, a pair of pistons disposed in said cylinder for movement therethrough, a non-circular gear-wheel connected to each piston for rotation therewith, other non-circular gear-wheels in mesh with said first mentioned gear-wheels, respectively, said last mentioned gear wheels being rotatable about their own axes and being connected to said power shaft to turn bodily therewith about the axis thereof, and normally fixed gear wheel means controlling rotation of said last mentioned gear wheels about their own axes, whereby the pistons are caused to approach and recede with respect to each other as they move through said cylinder, said normally fixed gear wheel means being rotatably adjustable to vary the angular positions of the pistons relative to the cylinder for any given spaced apart relationship of the pistons relative to each other.

2. In an engine of the character described, a circular cylinder having fluid inlet and outlet ports, a power shaft, a pair of pistons disposed in said cylinder for movement therethrough, a cage fixed to said power shaft for rotation therewith, a stub shaft carried by said cage for rotation therewith bodily about said power shaft and for rotation on its own axis relative to said cage, a pair of non-circular gear wheels eccentrically mounted on said stub shaft, a pair of non-circular gear wheels connected, respectively, with said pistons eccentrically with respect to the axis of rotation of said pistons and in mesh, respectively, with said first mentioned gear-wheels, a third gear wheel on said stub shaft, and a normally fixed gear wheel with which said third gear wheel meshes whereby the pistons are caused to approach and recede with respect to each other as they move through said cylinder, said normally fixed gear wheel being rotatably adjustable to vary the angular positions of the pistons relative to the cylinder for any given spaced apart relationship of said pistons.

3. In an engine of the character described, a circular cylinder having fluid inlet and outlet ports, a power shaft, a pair of pistons disposed in said cylinder for movement therethrough, a cage fixed to said power shaft for rotation therewith, a pair of stub shafts carried by said cage for rotation therewith bodily about said power shaft and for rotation on their own axes relative to said cage, a non-circular gear wheel eccentrically mounted on each stub shaft, a non-circular gear wheel connected with each piston eccentrically with respect to the axis of rotation of the pistons and in mesh with one of said first-mentioned gear wheels, a second gear wheel mounted on each stub shaft, and a pair of normally fixed gear wheels with which said second gear wheels mesh, respectively, whereby the pistons are caused to approach and recede relative to each other as they move through said cylinder, said normally fixed gear wheels being rotatably adjustable to vary the angular positions of the pistons relative to the cylinder for any given spaced apart relationship of the pistons.

4. An engine as set forth in claim 1 including shock absorbing elastic means interposed between the pistons and the gear wheels connected therewith.

PAUL HEINS.