(12) INTERNATIONAL APPLICATION PUBLISHED UNDER THE PATENT COOPERATION TREATY (PCT)

(19) World Intellectual Property Organization
International Bureau

(43) International Publication Date
17 April 2014 (17.04.2014)

WIPO | PCT

(10) International Publication Number
WO 2014/059302 A1

(51) International Patent Classification:
C21D 1/62 (2006.01) *C21D 1/673* (2006.01)

(21) International Application Number:
PCT/US2013/064585

(22) International Filing Date:
11 October 2013 (11.10.2013)

(25) Filing Language: English

(26) Publication Language: English

(30) Priority Data:
13/650,972 12 October 2012 (12.10.2012) US

(71) Applicant: **MANCHESTER COPPER PRODUCTS, LLC** [US/US]; 435 Gus Hipp Boulevard, Rockledge, FL 32955 (US).

(72) Inventors: **STEWART, Charles, L.**; c/o Paul Stewart, Estate Administrator, 28 Azalea Drive, Cocoa Beach, FL 32931 (US). **DENISON, Mark, R.**; 953 Fostoria Drive, Melbourne, FL 32940 (US). **WESSNER, Robert**; 420 Artemis Boulevard, Merritt Island, FL 32953 (US).

(74) Agents: **INGERMAN, Jeffrey, H.** et al.; Ropes & Gray LLP, 1211 Avenue of The Americas, New York, NY 10036 (US).

(81) Designated States *(unless otherwise indicated, for every kind of national protection available)*: AE, AG, AL, AM, AO, AT, AU, AZ, BA, BB, BG, BH, BN, BR, BW, BY, BZ, CA, CH, CL, CN, CO, CR, CU, CZ, DE, DK, DM, DO, DZ, EC, EE, EG, ES, FI, GB, GD, GE, GH, GM, GT, HN, HR, HU, ID, IL, IN, IR, IS, JP, KE, KG, KN, KP, KR, KZ, LA, LC, LK, LR, LS, LT, LU, LY, MA, MD, ME, MG, MK, MN, MW, MX, MY, MZ, NA, NG, NI, NO, NZ, OM, PA, PE, PG, PH, PL, PT, QA, RO, RS, RU, RW, SA, SC, SD, SE, SG, SK, SL, SM, ST, SV, SY, TH, TJ, TM, TN, TR, TT, TZ, UA, UG, US, UZ, VC, VN, ZA, ZM, ZW.

(84) Designated States *(unless otherwise indicated, for every kind of regional protection available)*: ARIPO (BW, GH, GM, KE, LR, LS, MW, MZ, NA, RW, SD, SL, SZ, TZ, UG, ZM, ZW), Eurasian (AM, AZ, BY, KG, KZ, RU, TJ, TM), European (AL, AT, BE, BG, CH, CY, CZ, DE, DK, EE, ES, FI, FR, GB, GR, HR, HU, IE, IS, IT, LT, LU, LV, MC, MK, MT, NL, NO, PL, PT, RO, RS, SE, SI, SK, SM, TR), OAPI (BF, BJ, CF, CG, CI, CM, GA, GN, GQ, GW, KM, ML, MR, NE, SN, TD, TG).

Published:

— *with international search report (Art. 21(3))*

(54) Title: SYSTEMS AND METHODS FOR COOLING EXTRUDED MATERIALS

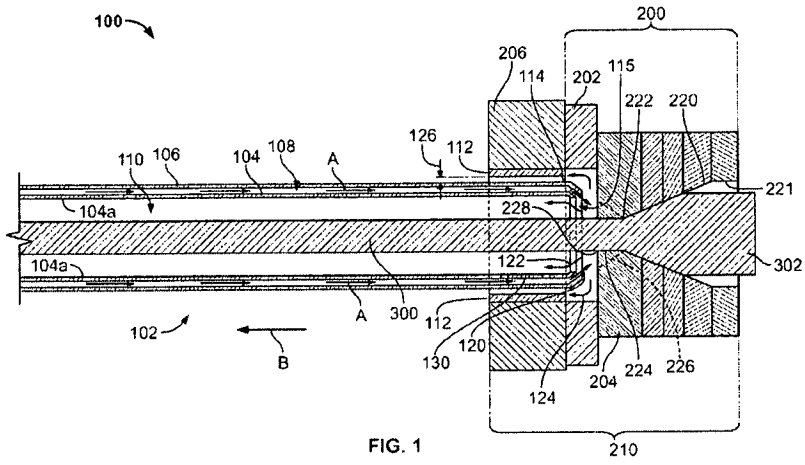

FIG. 1

(57) Abstract: Systems, devices, and methods are described for cooling extruded materials. In certain embodiments, a quench tube is provided that includes an inner wall and an outer wall having a channel therebetween for transporting cooling fluid along the quench tube. A passage within the inner surface of the inner wall receives an extruded material through a nozzle formed at an end of the quench tube that delivers the cooling fluid to the extruded material. The channel may be angled at the nozzle to deliver the cooling fluid at an angle with respect to the quench tube, and the quench tube is configured to extend at least in part within an extrusion die.

WO 2014/059302 A1

SYSTEMS AND METHODS FOR COOLING EXTRUDED MATERIALS

Background

[0001] Quenching is the process of rapidly cooling a material to obtain certain material properties. For example, rapidly cooling an extruded material can prevent material transformations from occurring due to the narrow window of time in which the reaction is thermodynamically favorable. In the context of extruding metal tubing using an extrusion die, the distance at which the extruded metal tubing extends from the die before quenching occurs affects the material properties of the metal tubing. Even at quenching distances as small as an eighth of an inch there can be measurable changes in the quality of the metal tubing. For extruded metal tubing, it is desirable to quench the extruded product as close to the exit of the extrusion die as possible. Present techniques do not allow for such rapid quenching of extruded metal tubing as the tubing exits the extrusion die.

Summary

[0002] Disclosed herein are systems, devices, and methods for quenching or cooling extruded materials. In certain embodiments, the systems, devices, and methods include a quench tube for spray quenching an extruded material such as metal tubing as the extruded material exits an extrusion die. In certain embodiments, the extrusion die may be a rotating extrusion die.

[0003] In one aspect, the systems, devices, and methods include a quench tube comprising an inner wall and an outer wall having a channel therebetween for transporting cooling fluid along the quench tube, a passage within an inner surface of the inner wall that receives an extruded material, and a nozzle formed at an end of the quench tube that delivers the cooling fluid to the extruded material and through which the extruded material passes to enter the passage, wherein the channel is angled at the nozzle to deliver the cooling fluid at an angle with respect to the quench tube, and wherein the quench tube is configured to extend at least in part within an extrusion die. The inner wall and the outer wall may be concentric. In certain implementations, the inner wall comprises an inner tube and the outer wall comprises

an outer tube. In some implementations, the extrusion die rotates and the quench tube does not rotate. The cooling fluid may be water.

[0004] In certain implementations, the quench tube includes a plurality of holes in the inner wall along at least a portion of the quench tube, and the holes may be equidistant from one another. In certain implementations, the quench tube includes an end cap positioned at the nozzle, wherein the angled channel is positioned within the end cap. The end cap may be structured to fit within a portion of the extrusion die and the cooling fluid may be delivered through the end cap.

[0005] In certain implementations, the cooling fluid is delivered at an angle that substantially aligns with a recess of the extrusion die. The nozzle delivers the cooling fluid as a convergent fluid stream, wherein the fluid stream narrows from a first diameter to a second diameter in the direction of flow, and wherein the second diameter is smaller than the first diameter. In certain implementations, the convergent fluid stream is shaped to substantially conform to the shape of a cutout in the extrusion die. In certain implementations, the cooling fluid contacts the extruded material as the extruded material exits the extrusion die. In some implementations, the cooling fluid contacts the extruded material within approximately 1/16 of an inch to 1 inch of the extruded material exiting the extrusion die or within approximately 1/8 of an inch to 1/2 of an inch of the extruded material exiting the extrusion die.

[0006] In one aspect, a method for quenching an extruded material is provided that includes positioning an elongate quench tube at an exit side of an extrusion die, wherein the quench tube includes a nozzle that is positioned within at least a portion of the extrusion die, pressing the extruded material through the extrusion die, wherein the extruded material passes through the nozzle into the quench tube, and delivering the cooling fluid to the extruded material via the nozzle as the extruded material exits the extrusion die, wherein the cooling fluid is delivered at an angle with respect to the quench tube. In certain implementations, the cooling fluid may be delivered at an angle that substantially aligns with a recess of the extrusion die. The nozzle delivers the cooling fluid as a convergent fluid stream, wherein the fluid stream narrows from a first diameter to a second diameter in the direction of flow, wherein the second diameter is smaller than the first diameter. In certain implementations, the convergent fluid stream is shaped to substantially conform to the shape of a cutout in the extrusion die. The cooling fluid may be water.

[0007] In one aspect, a quenching system is provided that comprises means for transporting cooling fluid along a quench tube having an inner wall and an outer wall, a passage within an

inner surface of the inner wall that receives an extruded material, and means for delivering the cooling fluid to the extruded material at an angle with respect to the quench tube, wherein the extruded material passes through the delivering means to enter the passage, and wherein the quench tube is configured to extend at least in part within an extrusion die. The inner wall and the outer wall may be concentric. In certain implementations, the inner wall comprises an inner tube and the outer wall comprises an outer tube. In some implementations, the extrusion die rotates and the quench tube does not rotate. The cooling fluid may be water.

[0008] In certain implementations, the quenching system includes a plurality of holes in the inner wall along at least a portion of the quench tube, and the holes may be equidistant from one another. In certain implementations, the quenching system includes an end cap positioned at the delivering means. The end cap may be structured to fit within a portion of the extrusion die and the cooling fluid may be delivered through the end cap.

[0009] In certain implementations, the cooling fluid is delivered at an angle that substantially aligns with a recess of the extrusion die. The delivering means delivers the cooling fluid as a convergent fluid stream, wherein the fluid stream narrows from a first diameter to a second diameter in the direction of flow, and wherein the second diameter is smaller than the first diameter. In certain implementations, the convergent fluid stream is shaped to substantially conform to the shape of a cutout in the extrusion die. In certain implementations, the cooling fluid contacts the extruded material as the extruded material exits the extrusion die. In some implementations, the cooling fluid contacts the extruded material within approximately 1/16 of an inch to 1 inch of the extruded material exiting the extrusion die or within approximately 1/8 of an inch to 1/2 of an inch of the extruded material exiting the extrusion die.

[0010] Variations and modifications of these embodiments will occur to those of skill in the art after reviewing this disclosure. The foregoing features and aspects may be implemented, in any combination and subcombination (including multiple dependent combinations and subcombinations), with one or more other features described herein. The various features described or illustrated herein, including any components thereof, may be combined or integrated in other systems. Moreover, certain features may be omitted or not implemented.

Brief Description of the Drawings

[0011] The foregoing and other objects and advantages will be apparent upon consideration of the following detailed description, taken in conjunction with the accompanying drawings, in which like reference characters refer to like parts throughout, and in which:

[0012] FIG. 1 shows a schematic view of an illustrative quenching system;

[0013] FIG. 2 shows a perspective view of an illustrative quench tube and end cap; and

[0014] FIG. 3 shows a schematic view of an illustrative quench tube and extrusion die.

Detailed Description

[0015] To provide an overall understanding of the systems, devices, and methods described herein, certain illustrative embodiments will be described. Although the embodiments and features described herein are specifically described for use in connection with extrusion press systems, it will be understood that all the components, connection mechanisms, manufacturing methods, and other features outlined below may be combined with one another in any suitable manner and may be adapted and applied to systems to be used in other manufacturing processes, including, but not limited to cast-and-roll, up-casting, other extrusion, and other manufacturing procedures. Furthermore, although the embodiments described herein relate to quenching extruded metal tubing formed from billets, it will be understood that the systems, devices, and methods herein may be adapted and applied to systems for quenching or otherwise cooling any suitable type of material.

[0016] The systems, devices, and method described herein for cooling an extruded material may be used in any suitable extrusion system, including, for example, the extrusion press system described in U.S. Patent Application No. 13/650,977, filed October 12, 2012, the disclosure of which is hereby incorporated by reference herein in its entirety.

[0017] FIG. 1 shows a schematic view of a quenching system 100 according to certain embodiments. A quench tube 102 includes an inner wall 104 and an outer wall 106 having a channel 108 therebetween for transporting cooling fluid along the quench tube 102. In certain embodiments, the outer wall 106 may be formed by an outer tube and the inner wall 104 may be formed by an inner tube. As shown in FIG. 1, for example, the cooling fluid travels in the direction of arrow *A* within the channel 108, which acts as a conduit for delivering the cooling fluid to an extruded material such as the extruded material 300. Any suitable cooling fluid may be used for quenching the extruded material 300, including water, various mineral oils, brines, synthetic oils, any other suitable cooling fluid, including gaseous

fluids, or any combination thereof. The inner wall 104 and the outer wall 106 are generally concentric and may have any suitable thickness, including different respective thicknesses between the two walls 104, 106. In certain embodiments, while generally concentric, one of the walls 104, 106 may be elliptical while the other is circular. The quench tube 102 further includes a passage 110 within an inner surface 104a of the inner wall 104 that receives the extruded material 300 and through which the extruded material 300 travels in the direction of arrow *B* along the quench tube 102.

[0018] The cooling fluid of the quench tube 102 flows along the direction of arrow *A* to a nozzle 114 formed at an end of the quench tube 102. The nozzle 114 delivers the cooling fluid to the extruded material 300, and the nozzle 114 provides the opening 115 in the quench tube 102 through which the extruded material 300 passes to enter the passage 110. In certain embodiments, the channel 108 is angled at the nozzle 114 to deliver the cooling fluid, along fluid stream 120, at an angle with respect to the quench tube. For example, as shown in FIG. 3, the angle that is formed at the nozzle between the channel and the quench tube is designated by angle α. The nozzle 114 delivers the cooling fluid as a convergent fluid stream 120, where the fluid stream 120 narrows from a first diameter to a second diameter in the direction of flow (along arrow *A*) and the second diameter is smaller than the first diameter. In certain embodiments, the channel 108 between the inner wall 104 and the outer wall 106 may not be angled, and the angled delivery of cooling fluid at the nozzle may be effected by an end cap, such as the end cap 350 of FIG. 2, having an angled interior surface therein. For example, the inner wall 104 and the outer wall 106 may be formed by respective inner and outer tubes that are generally straight along the length of the quench tube 102, and an end cap may provide for the angled delivery of the cooling fluid. Even in embodiments where the channel 108 is angled at the nozzle 114, it will be understood that the quench tube 102 may incorporate an end cap such as the end cap 350 of FIG. 2.

[0019] The quench tube 102 is configured to extend, at least in part, within an extrusion die such as extrusion die 200. The extrusion die 200 includes a base plate 202 and, in certain embodiments, one or more die plates 204, which together are shown as being coupled to a die-backer plate 206. In certain embodiments, the extrusion die 200 and the die-backer plate 206 form a die assembly 210 that rotates, although it will be understood that the quench tube 102 may be used in extrusion systems that do not utilize a rotating extrusion die 200. Furthermore, the quench tube 102 of the present disclosure does not rotate, although it will be appreciated that in certain embodiments the quench tube 102 may be configured to rotate. Rotating extrusion die assemblies are discussed in detail in U.S. Patent Application

No. 13/650,981, filed October 12, 2012, the disclosure of which is hereby incorporated by reference herein in its entirety.

[0020] The extrusion die 200 generally includes a profile 220 formed in the one or more die plates 204 and having an entry diameter 221 that decreases to a point where the profile 220 sets the outer diameter of the extruded material 300. At that point, shown by label 222, the material (e.g., the billet 302) has been substantially fully deformed by the extrusion press die 200 and proceeds to exit the die 200 along the remaining portion, if any, of the die plate profile 220. For example, in certain embodiments the extruded material may pass through a portion 224 of the profile 220, beyond point 222, before exiting the extrusion die 200 at exit region 228. In certain embodiments, however, there may be a cutout or recess 226 formed in the extrusion die 200 beyond the point 222 at which the outer diameter of the extruded material is set. The entry diameter 221 is preferably slightly larger than the original diameter of the billet 302 that is pressed into the extrusion die 200 to prevent obstructing or otherwise restricting the billet 302 from entering the die 200. The billet 302 may be formed from any suitable material for use in extrusion press systems including, but not limited to, various metals including copper and copper alloys, or any other suitable non-ferrous metals such as aluminum, nickel, titanium, and alloys thereof, ferrous metals including steel and other iron alloys, polymers such as plastics, or any other suitable material or combinations thereof.

[0021] The cooling fluid is delivered to the extruded material 300 using the nozzle 114 formed at an end of the quench tube 102. As discussed above, the cooling fluid is delivered at an angle along a fluid stream 120 with respect to the quench tube 102 (and the extruded material 300 itself) and thus quenches the extruded material 300 as it exits the extrusion die 200. During the spray-quenching process, excess cooling fluid generally flows back into the passage 110 with the extruded material 300, shown by arrow 122, or flows around the nozzle 114 and between the quench tube 102 and die assembly 210, shown by arrow 124. For excess cooling fluid that flows along the direction of arrow 122, this cooling fluid exits at an opposite end of the quench tube 102 with the extruded material 300. For excess cooling fluid that flows along the direction of arrow 124, the cooling fluid passes through an engineered clearance 126 between the quench tube 102 and a support bushing 112 located between the quench tube 102 and the die-backer plate 206/base plate 202. The engineered clearance 126 between and along these components (via the support bushing 112) is provided for relief or drainage of the excess cooling fluid. The dimensions of the engineered clearance 126 can be adjusted to change the fluid flow properties of the cooling fluid. Providing an engineered clearance 126 between the quench tube 102 and the die-backer

plate 206/base plate 202 by way of the support bushing 112 improves the heat exchange process because increasing the engineered clearance 126 allows, for example, an increase in flow for the excess cooling fluid.

[0022] With respect to the relief or drainage of excess cooling fluid, in certain embodiments a plurality of holes 130 may be provided in the inner wall 104 along at least a portion of the quench tube 102. In some embodiments, the plurality of holes 130 may be equidistant from one another, although they may be provided in any suitable spatial arrangement with respect to one another. Any number of holes 130 may be provided, including, for example, 30 or more holes along a length and/or diameter or circumference of the inner wall 104. For example, holes 130 are shown along a length of the inner wall 104 and holes 330 of FIG. 2 are shown along a diameter or circumference of the inner wall 304. Furthermore, the holes 130 may have any size diameter, including diameters of approximately 1/16 of an inch, or any other suitable diameter. In certain embodiments, at least some of the holes 130 may have different respective diameters from others. The holes 130 may create a Venturi effect for the excess cooling fluid and, with the engineered clearance 126 described above, may increase the relief of excess cooling fluid during operation of the quench tube 102. The Venturi effect may result when the cooling fluid flowing through holes 130, oriented less than 90-degrees in the extrusion direction (arrow *B*), produces a partial vacuum using the kinetic energy of the fluid stream 120.

[0023] As discussed above, in certain embodiments, an end cap may be provided at the nozzle 114 end of the quench tube 102. For example, FIG. 2 shows a perspective view of a quench tube 302 having an end cap 350. The end cap 350 is positioned at the nozzle 314 such that the angled channel of the nozzle 314 (or in some embodiments a non-angled channel of the nozzle 314) is positioned within the end cap 350. The end cap 350 is structured to fit within a portion of an extrusion die, and may be structured to withstand the heat generated as a result of the extrusion. FIG. 2 also shows the inner wall 304 and the outer wall 306 of the quench tube 302, along with arrow *C* indicating the direction of flow of the cooling fluid in the channel between the inner 304 and outer walls 306. The cooling fluid flows between the inner and outer walls 304, 306 along the direction of arrow *C* and exits the end cap 350 as a fluid stream 320. The nozzle 314 and end cap 350 deliver the cooling fluid as a convergent fluid stream 320, where the fluid stream 320 narrows from a first diameter to a second diameter in the direction of flow (along arrow *C*) and the second diameter is smaller than the first diameter. In certain embodiments, the shape of the fluid stream 320 may be configured to substantially conform to or complement the shape of a cutout or recess in an

extrusion die (e.g., cutout or recess 226 in the extrusion die 200 of FIG. 1). Various cutouts or recesses formed in an extrusion die are further discussed below with reference to FIG. 3.

[0024] FIG. 3 shows a schematic view of a quench tube nozzle 400 and extrusion die 450 according to certain embodiments, where the extrusion die 450 includes cutouts or recesses 452 formed therein. The extrusion die 450 has a profile 454 along which a billet is extruded to form an extruded material. The profile 454 has an entry diameter 455 that decreases to a point at which the profile 454 sets the outer diameter of the extruded material. At that point, shown by label 456, the material has been substantially fully deformed by the extrusion process, the outer diameter, *d*, of the extruded material has been set, and the material is extruded from the die 450. In certain embodiments, a cutout or recess 452 may be formed in the extrusion die 450 to allow access for the delivery of cooling fluid from the nozzle 400 of the quench tube 402. The quench tube 402 includes in inner wall 404, outer wall 406, and channel 408 therebetween, which channel 408 delivers the cooling fluid via the nozzle 400 along the directions shown by fluid flow lines 410. The cooling fluid is delivered at an angle, α, that aligns with the cutout or recess 452 formed at an angle into the extrusion die 450. The nozzle 400 delivers the cooling fluid as a convergent fluid stream that narrows from a first diameter, at the outlet of the nozzle, to a second diameter proximate to the exit region 456, in the direction of flow, where the second diameter is smaller than the first diameter. The convergent fluid stream is shaped, therefore, to substantially conform to the shape of the cutout or recess 452 in the extrusion die 450. The cutouts or recesses 452 in the extrusion die 450 may be formed as any suitable shape. It will be understood that the angle at which the cooling fluid is delivered from the nozzle 400 of the quench tube 402 may be adjusted or otherwise modified to any desired application angle, α, to conform to the cutouts or recesses 452 of the extrusion die 450.

[0025] The quench tube 102 of the present disclosure allows for improved spray-quenching of an extruded material with respect to the point at which the extruded material exits an extrusion die. As discussed above, the quench tube (e.g., quench tube 102, 302, 402) is configured to extend, at least in part, within an extrusion die (e.g., extrusion die 200, 450). In certain embodiments, the quench tube is positioned approximately 15/16 of an inch beyond the die-backer plate 206 and within the extrusion die 200, although any position within the extrusion die 200 may be used. This position, along with the angled fluid flow of the cooling fluid relative to the quench tube (and surface of the extrusion), has been calculated to impinge the extrusion in a counter current flow pattern 410 that flows over the extruded material to the exit point of the extruded material from the rotating die (e.g., exit region 228 of FIG. 1 and

exit region 456 of FIG. 3). In certain embodiments, the cooling fluid may contact the extruded material at any desired distance from the extrusion die, including, for example, within approximately 1/8 of an inch, or closer, to the point of exit from the extrusion die.

[0026] The quench tubes of the disclosure (e.g., quench tube 102 of FIG. 1) may be formed of any suitable durable and substantially rigid material, including, but not limited to, various polymers such as polyethylene (including high density polyethylene, low density polyethylene, and polyethylene terephthalate), polypropylene, polyvinyl chloride, polystyrene, post-consumer resins, or any other suitable moldable polymers including biodegradable polymers such as polylactide; various metals including steel, tin, aluminum, copper, or any other suitable metals or alloys; any other suitable material; or combinations thereof.

[0027] The end caps of the disclosure (e.g., end cap 350 of FIG. 2) may be formed of any suitable material that is preferably heat resistant, including, but not limited to, various polymers, metals including steel, tin, aluminum, copper, or any other suitable metals or alloys, any other suitable material, or combinations thereof.

[0028] Although each of the above described and illustrated embodiments of a quench tube system show the quench tube having substantially round cross-sections, it will be understood that any of a wide variety of shapes may be utilized to form the quench tube and the first and second walls of the quench tube. For example, the quench tube may have cross-sectional areas that are circular, elliptical, rectangular, triangular, hexagonal, or any other desired shape or combinations thereof.

[0029] The foregoing is merely illustrative of the principles of the disclosure, and the systems, devices, and methods can be practiced by other than the described embodiments, which are presented for purposes of illustration and not of limitation. It is to be understood that the systems, devices, and methods disclosed herein, while shown for use in extrusion press systems, may be applied to systems, devices, and methods to be used in other manufacturing procedures including, but not limited to, cast-and-roll, up-casting, other extrusion, and other manufacturing procedures.

[0030] Variations and modifications will occur to those of skill in the art after reviewing this disclosure. The disclosed features may be implemented, in any combination and subcombination (including multiple dependent combinations and subcombinations), with one or more other features described herein. The various features described or illustrated above, including any components thereof, may be combined or integrated in other systems. Moreover, certain features may be omitted or not implemented.

[0031] Examples of changes, substitutions, and alterations are ascertainable by one skilled in the art and could be made without departing from the scope of the information disclosed herein. All references cited herein are incorporated by reference in their entirety and made part of this application.

What is Claimed is:

1. A quench tube comprising:

an inner wall and an outer wall having a channel therebetween for transporting cooling fluid along the quench tube;

a passage within an inner surface of the inner wall that receives an extruded material; and

a nozzle formed at an end of the quench tube that delivers the cooling fluid to the extruded material and through which the extruded material passes to enter the passage, wherein the channel is angled at the nozzle to deliver the cooling fluid at an angle with respect to the quench tube;

wherein the quench tube is configured to extend at least in part within an extrusion die.

2. The quench tube of claim 1, further comprising a plurality of holes in the inner wall along at least a portion of the quench tube.

3. The quench tube of claim 2, wherein the plurality of holes are equidistant from one another.

4. The quench tube of any of claims 1-3, further comprising an end cap positioned at the nozzle, wherein the angled channel is positioned within the end cap.

5. The quench tube of claim 4, wherein the end cap is structured to fit within a portion of the extrusion die.

6. The quench tube of claim 5, wherein the cooling fluid is delivered through the end cap.

7. The quench tube of any of claims 1-6, wherein the cooling fluid is delivered at an angle that substantially aligns with a recess of the extrusion die.

8. The quench tube of any of claims 1-7, wherein the nozzle delivers the cooling fluid as a convergent fluid stream, wherein the fluid stream narrows from a first diameter to a second diameter in the direction of flow, and wherein the second diameter is smaller than the first diameter.

9. The quench tube of claim 8, wherein the convergent fluid stream is shaped to substantially conform to the shape of a cutout in the extrusion die.

10. The quench tube of any of claims 1-9, wherein the extrusion die rotates and wherein the quench tube does not rotate.

11. The quench tube of any of claims 1-10, wherein the inner wall and the outer wall are concentric.

12. The quench tube of any of claims 1-11, wherein the inner wall comprises an inner tube and the outer wall comprises an outer tube.

13. The quench tube of any of claims 1-12, wherein the cooling fluid contacts the extruded material as the extruded material exits the extrusion die.

14. The quench tube of any of claims 1-12, wherein the cooling fluid contacts the extruded material within approximately 1/16 of an inch to 1 inch of the extruded material exiting the extrusion die.

15. The quench tube of claim 14, wherein the cooling fluid contacts the extruded material within approximately 1/8 of an inch to 1/2 of an inch of the extruded material exiting the extrusion die.

16. The quench tube of any of claims 1-15, wherein the cooling fluid is water.

17. A method for quenching an extruded material, the method comprising:

positioning an elongate quench tube at an exit side of an extrusion die, wherein the quench tube includes a nozzle that is positioned within at least a portion of the extrusion die;

pressing the extruded material through the extrusion die, wherein the extruded material passes through the nozzle into the quench tube; and

delivering the cooling fluid to the extruded material via the nozzle as the extruded material exits the extrusion die, wherein the cooling fluid is delivered at an angle with respect to the quench tube.

18. The method of claim 17, wherein the cooling fluid is delivered at an angle that substantially aligns with a recess of the extrusion die.

19. The method of claim 17 or 18, wherein the nozzle delivers the cooling fluid as a convergent fluid stream, wherein the fluid stream narrows from a first diameter to a second diameter in the direction of flow, wherein the second diameter is smaller than the first diameter.

20. The method of claim 19, wherein the convergent fluid stream is shaped to substantially conform to the shape of a cutout in the extrusion die.

21. The method of any of claims 17-20, wherein the cooling fluid is water.

22. A quenching system comprising:

means for transporting cooling fluid along a quench tube having an inner wall and an outer wall;

a passage within an inner surface of the inner wall that receives an extruded material; and

means for delivering the cooling fluid to the extruded material at an angle with respect to the quench tube, wherein the extruded material passes through the delivering means to enter the passage;

wherein the quench tube is configured to extend at least in part within an extrusion die.

23. The quenching system of claim 22, further comprising a plurality of holes in the inner wall along at least a portion of the quench tube.

24. The quenching system of claim 23, wherein the plurality of holes are equidistant from one another.

25. The quenching system of any of claims 22-24, further comprising an end cap positioned at the delivering means.

26. The quenching system of claim 25, wherein the end cap is structured to fit within a portion of the extrusion die.

27. The quenching system of claim 26, wherein the cooling fluid is delivered through the end cap.

28. The quenching system of any of claims 22-27, wherein the cooling fluid is delivered at an angle that substantially aligns with a recess of the extrusion die.

29. The quenching system of any of claims 22-28, wherein the delivering means delivers the cooling fluid as a convergent fluid stream, wherein the fluid stream narrows from a first diameter to a second diameter in the direction of flow, and wherein the second diameter is smaller than the first diameter.

30. The quenching system of claim 29, wherein the convergent fluid stream is shaped to substantially conform to the shape of a cutout in the extrusion die.

31. The quenching system of any of claims 22-30, wherein the extrusion die rotates and wherein the quench tube does not rotate.

32. The quenching system of any of claims 22-31, wherein the inner wall and the outer wall are concentric.

33. The quench tube of any of claims 22-32, wherein the inner wall comprises an inner tube and the outer wall comprises an outer tube.

34. The quenching system of any of claims 22-33, wherein the cooling fluid contacts the extruded material as the extruded material exits the extrusion die.

35. The quenching system of any of claims 22-33, wherein the cooling fluid contacts the extruded material within approximately 1/16 of an inch to 1 inch of the extruded material exiting the extrusion die.

36. The quenching system of claim 35, wherein the cooling fluid contacts the extruded material within approximately 1/8 of an inch to 1/2 of an inch of the extruded material exiting the extrusion die.

37. The quenching system of any of claims 22-36, wherein the cooling fluid is water.

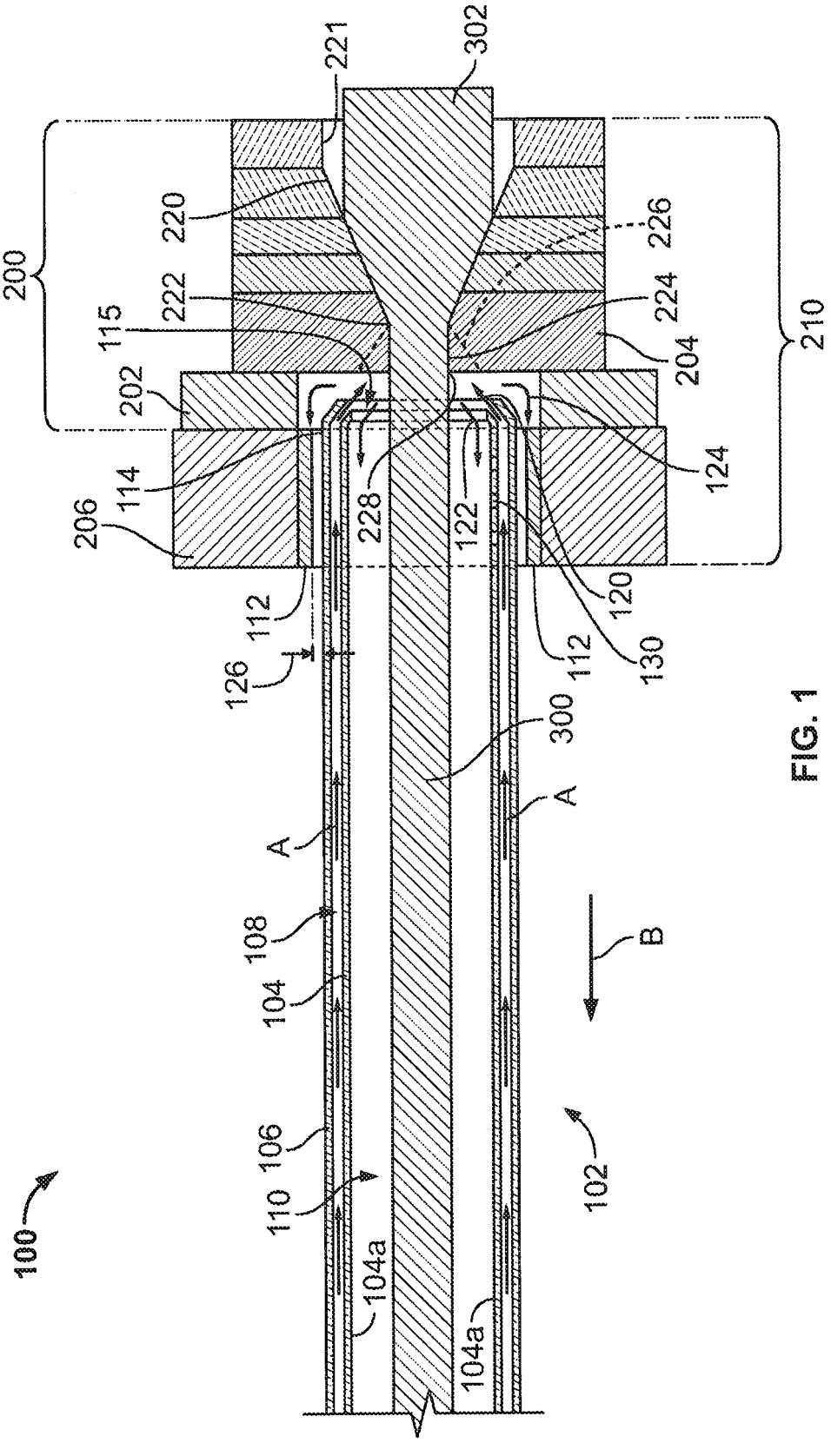
100
102
104
104a
106
108
110
112
114
115
120
122
124
126
130
200
202
204
206
210
220
221
222
224
226
228
300
302
A
A
B

FIG. 1

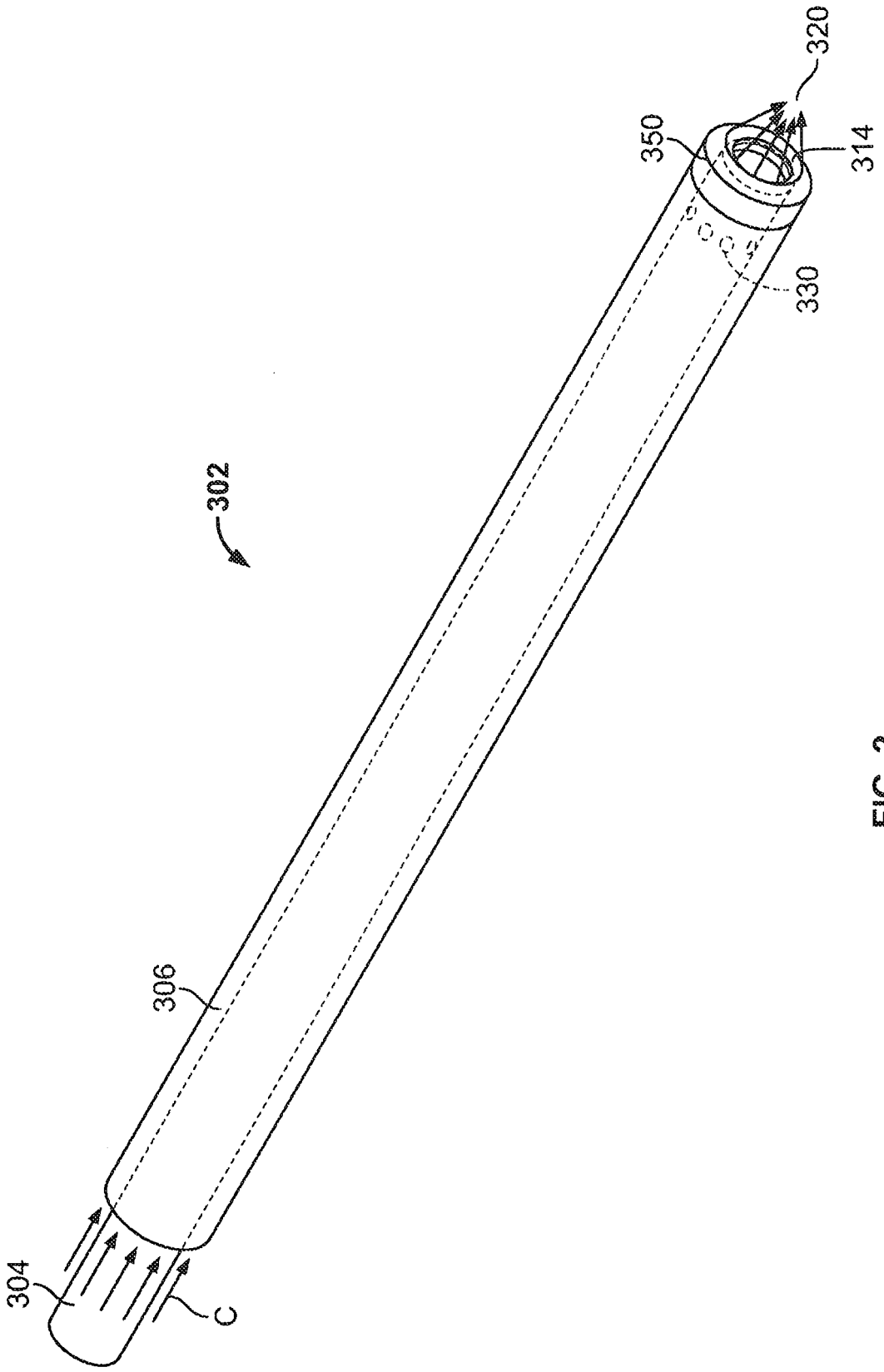

FIG. 2

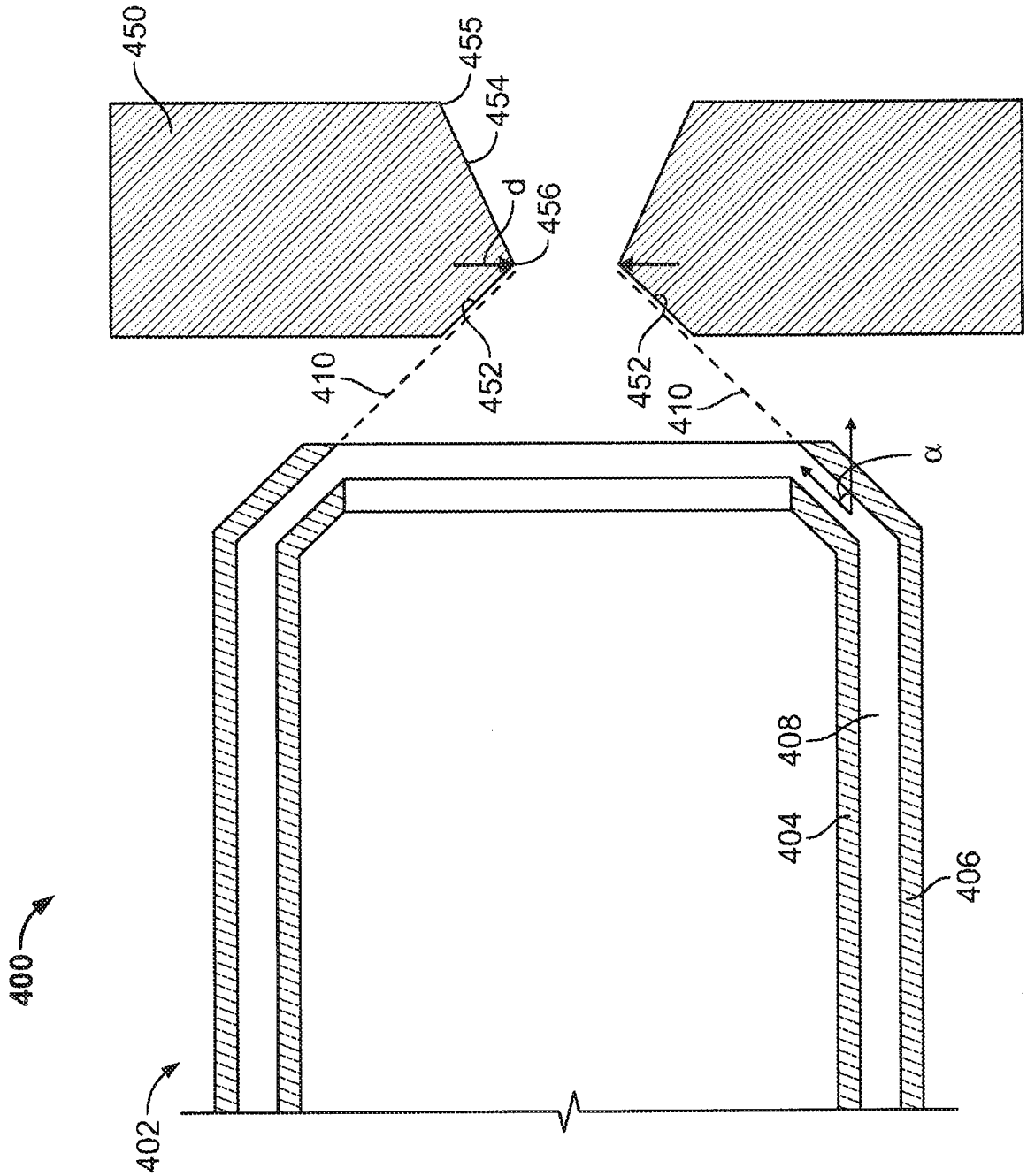

FIG. 3

INTERNATIONAL SEARCH REPORT

International application No.
PCT/US2013/064585

A. CLASSIFICATION OF SUBJECT MATTER

C21D 1/62(2006.01)i, C21D 1/673(2006.01)i

According to International Patent Classification (IPC) or to both national classification and IPC

B. FIELDS SEARCHED

Minimum documentation searched (classification system followed by classification symbols)
C21D 1/62; B29C 47/90; B29C 49/42; F25D 13/06; B29C 47/88; B29C 49/64; B29D 23/00; C21D 1/673

Documentation searched other than minimum documentation to the extent that such documents are included in the fields searched
Korean utility models and applications for utility models
Japanese utility models and applications for utility models

Electronic data base consulted during the international search (name of data base and, where practicable, search terms used)
eKOMPASS(KIPO internal) & keywords: quenching, cooling, extrusion, angle, and channel

C. DOCUMENTS CONSIDERED TO BE RELEVANT

Category*	Citation of document, with indication, where appropriate, of the relevant passages	Relevant to claim No.
A	KR 10-1999-0084470 A (KIM, YOUNG SU) 6 December 1999 See page 3, line 34 - page 4, line 2; and figures 2,3.	1-6,17-20,22-27
A	US 5178814 A (LEMOND, PHILLIP E.) 12 January 1993 See column 3, line 64 - column 6, line 11; and figures 2,3.	1-6,17-20,22-27
A	US 2010-0196643 A1 (DUGARD et al.) 5 August 2010 See paragraph [0010]; and figures 1,2.	1-6,17-20,22-27
A	US 6418732 B1 (KLANE et al.) 16 July 2002 See column 6, line 46 - column 7, line 47; and figures 1-3.	1-6,17-20,22-27
A	KR 10-2005-0047542 A (HUSKY INJECTION MOLDING SYSTEMS LTD.) 20 May 2005 See page 5, line 6 - page 6, line 6; and figures 2,3.	1-6,17-20,22-27

☐ Further documents are listed in the continuation of Box C.

☒ See patent family annex.

* Special categories of cited documents:
"A" document defining the general state of the art which is not considered to be of particular relevance
"E" earlier application or patent but published on or after the international filing date
"L" document which may throw doubts on priority claim(s) or which is cited to establish the publication date of another citation or other special reason (as specified)
"O" document referring to an oral disclosure, use, exhibition or other means
"P" document published prior to the international filing date but later than the priority date claimed
"T" later document published after the international filing date or priority date and not in conflict with the application but cited to understand the principle or theory underlying the invention
"X" document of particular relevance; the claimed invention cannot be considered novel or cannot be considered to involve an inventive step when the document is taken alone
"Y" document of particular relevance; the claimed invention cannot be considered to involve an inventive step when the document is combined with one or more other such documents, such combination being obvious to a person skilled in the art
"&" document member of the same patent family

Date of the actual completion of the international search	Date of mailing of the international search report
24 January 2014 (24.01.2014)	**24 January 2014 (24.01.2014)**

Name and mailing address of the ISA/KR
Korean Intellectual Property Office
189 Cheongsa-ro, Seo-gu, Daejeon Metropolitan City, 302-701, Republic of Korea
Facsimile No. +82-42-472-7140

Authorized officer
SONG, Ho Keun
Telephone No. +82-42-481-5580

INTERNATIONAL SEARCH REPORT

International application No.
PCT/US2013/064585

Box No. II Observations where certain claims were found unsearchable (Continuation of item 2 of first sheet)

This international search report has not been established in respect of certain claims under Article 17(2)(a) for the following reasons:

1. ☐ Claims Nos.:
because they relate to subject matter not required to be searched by this Authority, namely:

2. ☒ Claims Nos.: 9,15,30,36
because they relate to parts of the international application that do not comply with the prescribed requirements to such an extent that no meaningful international search can be carried out, specifically:
Claims 9,15,30,36 are unclear, because they refer to multiple dependent claims which do not comply with PCT Rule 6.4(a).

3. ☒ Claims Nos.: 7,8,10-14,16,21,28,29,31-35,37
because they are dependent claims and are not drafted in accordance with the second and third sentences of Rule 6.4(a).

Box No. III Observations where unity of invention is lacking (Continuation of item 3 of first sheet)

This International Searching Authority found multiple inventions in this international application, as follows:

1. ☐ As all required addtional search fees were timely paid by the applicant, this international search report covers all searchable claims.

2. ☐ As all scarchablc claims could bc scarchcd without cffort justifying an additional fccs, this Authority did not invitc payment of any additional fees.

3. ☐ As only some of the required additional search fees were timely paid by the applicant, this international search report covers only those claims for which fees were paid, specifically claims Nos.:

4. ☐ No required additional search fees were timely paid by the applicant. Consequently, this international search report is restricted to the invention first mentioned in the claims; it is covered by claims Nos.:

Remark on Protest

☐ The additional search fees were accompanied by the applicant's protest and, where applicable, the payment of a protest fee.
☐ The additional search fees were accompanied by the applicant's protest but the applicable protest fee was not paid within the time limit specified in the invitation.
☐ No protest accompanied the payment of additional search fees.

INTERNATIONAL SEARCH REPORT

Information on patent family members

International application No.
PCT/US2013/064585

Patent document cited in search report	Publication date	Patent family member(s)	Publication date
KR 10-1999-0084470 A	06/12/1999	KR 10-0294477 B1	17/04/2001
US 5178814 A	12/01/1993	EP 0536497 A2	14/04/1993
		EP 0536497 B1	11/01/1995
		JP 05-287606 A	02/11/1993
US 2010-0196643 A1	05/08/2010	EP 2117805 A2	18/11/2009
		FR 2911536 A1	25/07/2008
		JP 2010-516508 A	20/05/2010
		WO 2008-104649 A2	04/09/2008
		WO 2008-104649 A3	13/11/2008
US 6418732 B1	16/07/2002	AT 249328 T	15/09/2003
		EP 0857560 A1	12/08/1998
		EP 0857561 A1	12/08/1998
		EP 0857561 B1	10/09/2003
KR 10-2005-0047542 A	20/05/2005	AU 2003-269622 A1	08/04/2004
		AU 2003-269622 B2	07/09/2006
		CA 2493961 A1	01/04/2004
		CA 2493961 C	18/11/2008
		EP 1554106 A2	20/07/2005
		JP 2005-538869 A	22/12/2005
		JP 4368801 B2	18/11/2009
		TW 225002 A	11/12/2004
		TW 225002 B	11/12/2004
		US 2004-0056385 A1	25/03/2004
		US 2004-0058030 A1	25/03/2004
		US 2004-0258791 A1	23/12/2004
		US 2005-0186375 A1	25/08/2005
		US 6737007 B2	18/05/2004
		US 6916168 B2	12/07/2005
		US 6951453 B2	04/10/2005
		WO 2004-026561 A2	01/04/2004
		WO 2004-026561 A3	24/06/2004

(19)中华人民共和国国家知识产权局

(12)发明专利申请

(10)申请公布号 CN 104781428 A
(43)申请公布日 2015.07.15

(21)申请号 201380053553.7
(22)申请日 2013.10.11
(30)优先权数据
13/650,972 2012.10.12 US
(85)PCT国际申请进入国家阶段日
2015.04.10
(86)PCT国际申请的申请数据
PCT/US2013/064585 2013.10.11
(87)PCT国际申请的公布数据
WO2014/059302 EN 2014.04.17
(71)申请人 曼彻斯特铜产品有限责任公司
地址 美国佛罗里达
(72)发明人 C·L·斯特沃特 M·R·德尼森 R·维斯纳
(74)专利代理机构 中国国际贸易促进委员会专利商标事务所 11038
代理人 姜雪梅
(51)Int.Cl.
C21D 1/62(2006.01)
C21D 1/673(2006.01)

权利要求书2页 说明书6页 附图3页

(54)发明名称

用于冷却挤出材料的系统和方法

(57)摘要

本发明描述了用于冷却挤出材料的系统、装置和方法。在某些实施例中，提供了一种淬火管，该淬火管包括内壁和外壁，在内壁和外壁之间具有通路，用于将冷却流体沿着淬火管运输。内壁的内表面内的通道接收穿过喷嘴的挤出材料，该喷嘴形成在淬火管的一个端部处，将冷却流体输送到挤出材料。该通路可在喷嘴处成角度，以将冷却流体以相对于淬火管成角度地输送，并且淬火管构造为至少部分地在挤出模内延伸。

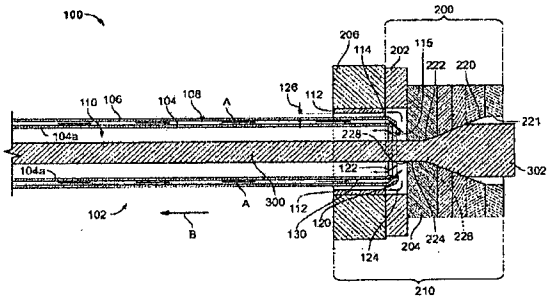

CN 104781428 A

1. 一种淬火管，所述淬火管包括：

内壁和外壁，在内壁和外壁之间具有通路，用于沿着淬火管输送冷却流体；

通道，所述通道处于内壁的内表面内并且接收挤出材料；以及

喷嘴，所述喷嘴形成在淬火管的一个端部处，并且将冷却流体输送到挤出材料，而且挤出材料穿过该喷嘴以进入所述通道，其中该通路在喷嘴处成角度，以将冷却流体相对于淬火管成角度地输送；

其中，淬火管构造为至少部分地在挤出模内延伸。

2. 如权利要求 1 所述的淬火管，还包括多个孔，所述多个孔沿着淬火管的至少一部分处于内壁中。

3. 如权利要求 2 所述的淬火管，其中，所述多个孔彼此等距。

4. 如权利要求 1-3 中任一项所述的淬火管，还包括端盖，所述端盖定位在喷嘴处，其中成角度的通路被定位在端盖内部。

5. 如权利要求 4 所述的淬火管，其中，端盖构造为装配在挤出模的一部分内。

6. 如权利要求 5 所述的淬火管，其中，冷却流体被输送穿过端盖。

7. 如权利要求 1-6 中任一项所述的淬火管，其中，冷却流体以基本上对准挤出模的凹槽的一角度进行输送。

8. 如权利要求 1-7 中任一项所述的淬火管，其中，喷嘴将冷却流体输送为会聚的流体流，其中流体流在流动方向上从第一直径变窄到第二直径，并且第二直径小于第一直径。

9. 如权利要求 8 所述的淬火管，其中，所述会聚的流体流被成形为基本上符合于挤出模中切口的形状。

10. 如权利要求 1-9 中任一项所述的淬火管，其中，挤出模旋转，而淬火管不旋转。

11. 如权利要求 1-10 中任一项所述的淬火管，其中，内壁和外壁是同心的。

12. 如权利要求 1-11 中任一项所述的淬火管，其中，内壁包括内管，而外壁包括外管。

13. 如权利要求 1-12 中任一项所述的淬火管，其中，随着挤出材料退出挤出模，冷却流体接触挤出材料。

14. 如权利要求 1-12 中任一项所述的淬火管，其中，在退出挤出模的挤出材料的大约 1/16 英寸到 1 英寸内，冷却流体接触挤出材料。

15. 如权利要求 14 所述的淬火管，其中，在退出挤出模的挤出材料的大约 1/8 英寸到 1/2 英寸内，冷却流体接触挤出材料。

16. 如权利要求 1-15 中任一项所述的淬火管，其中，冷却流体是水。

17. 一种用于对挤出材料淬火的方法，所述方法包括：

将细长的淬火管定位在挤出模的出口侧处，其中淬火管包括喷嘴，所述喷嘴定位在挤出模的至少一部分内；

按压挤出材料穿过挤出模，其中挤出材料穿过喷嘴进入到淬火管中；以及

随着挤出材料退出挤出模，经由喷嘴将冷却流体输送到挤出材料，其中冷却流体相对于淬火管以一角度输送。

18. 如权利要求 17 的方法，其中，冷却流体以基本上对准挤出模的凹槽的角度进行输送。

19. 如权利要求 17 或者 18 所述的方法，其中，喷嘴将冷却流体输送为会聚的流体流，其

中流体流在流动方向上从第一直径变窄到第二直径，其中第二直径小于第一直径。

20. 如权利要求 19 所述的方法，其中，所述会聚的流体流成形为基本上符合于挤出模中切口的形状。

21. 如权利要求 17-20 中任一项所述的方法，其中所述冷却流体是水。

22. 一种淬火系统，所述淬火系统包括：

用于将冷却流体沿着淬火管运输的运输装置，所述淬火管具有内壁和外壁；

通道，所述通道处于内壁的内表面内并且接收挤出材料；以及

用于将冷却流体以相对于淬火管成角度地输送到挤出材料的输送装置，其中挤出材料流过输送装置以进入所述通道；

其中，淬火管构造为至少部分地在挤出模内延伸。

23. 如权利要求 22 所述的淬火系统，还包括多个孔，所述多个孔沿着淬火管的至少一部分处于内壁中。

24. 如权利要球 23 所述的淬火系统，其中，所述多个孔彼此等距。

25. 如权利要求 22-24 中任一项所述的淬火系统，还包括端盖，所述端盖定位在输送装置处。

26. 如权利要求 25 所述的淬火系统，其中，所述端盖构造为装配在挤出模的一部分内。

27. 如权利要求 26 所述的淬火系统，其中，冷却流体被输送穿过端盖。

28. 如权利要求 22-27 中任一项所述的淬火系统，其中，冷却流体以基本上对准挤出模的凹槽的一角度进行输送。

29. 如权利要求 22-28 中任一项所述的淬火系统，其中，该输送装置将冷却流体输送为会聚的流体流，其中所述流体流在流动方向上从第一直径变窄到第二直径，其中第二直径小于第一直径。

30. 如权利要求 29 所述的淬火系统，其中，所述会聚的流体流被成形为基本上符合于挤出模中切口的形状。

31. 如权利要求 22-30 中任一项所述的淬火系统，其中，挤出模旋转，而淬火管不旋转。

32. 如权利要求 22-31 中任一项所述的淬火系统，其中，内壁和外壁是同心的。

33. 如权利要求 22-32 中任一项所述的淬火管，其中，内壁包括内管，而外壁包括外管。

34. 如权利要求 22-33 中任一项所述的淬火系统，其中，随着挤出材料退出挤出模，冷却流体接触挤出材料。

35. 如权利要求 22-33 中任一项所述的淬火系统，其中，在退出挤出模的挤出材料的大约 1/16 英寸到 1 英寸内，冷却流体接触挤出材料。

36. 如权利要求 35 所述的淬火系统，其中，在退出挤出模的挤出材料的大约 1/8 英寸到 1/2 英寸内，冷却流体接触挤出材料。

37. 如权利要求 22-36 中任一项所述的淬火系统，其中，冷却流体是水。

打印ID?638979 Pg 4

用于冷却挤出材料的系统和方法

背景技术

[0001] 淬火是快速冷却材料以获得某些材料性质的工艺。例如，快速冷却挤出材料可防止由于时间窗窄而发生的材料相变，在该时间窗中，反应是热力学良好的。在使用挤出模来挤出金属管方面，在淬火发生之前所挤出的金属管从挤出模中延伸出的距离影响该金属管的材料性质。甚至在淬火距离小得仅仅为八分之一英寸的情况下，在金属管品质方面也存在可测量到的变化。对于挤出的金属管而言，期望对于挤出产品的淬火尽可能靠近挤出模的出口。当前的技术并不允许随着金属管从挤出模退出而如此快速地对挤出的金属管进行淬火。

发明内容

[0002] 在此公开了用于淬火或者冷却挤出材料的系统、装置和方法。在某些实施例中，这些系统、装置和方法包括用于随着挤出材料退出挤出模而对挤出材料进行喷雾淬火的淬火管（诸如金属管）。在某些实施例中，挤出模可以是旋转的挤出模。

[0003] 在一个方面，这些系统、装置和方法包括：淬火管，该淬火管包括内壁和外壁，在内壁和外壁之间具有通路，用于将冷却流体沿着淬火管运输；内壁的内表面内的通道，所述通道用于接受挤出材料；以及喷嘴，所述喷嘴形成在淬火管的一个端部处并且将冷却流体输送到挤出材料，并且挤出材料穿过该喷嘴而进入所述通道，其中，该通路在喷嘴处成角度以将冷却流体相对于淬火管成角度地输送，并且其中，该淬火管构造为在至少部分在挤出模内延伸。内壁和外壁可以是同心的。在某些实施例中，内壁包括内管，而外壁包括外管。在某些实施例中，挤出模旋转而淬火管并不旋转。冷却流体可以是水。

[0004] 在某些实施中，淬火管包括内壁中沿着淬火管的至少一部分的多个孔，并且这些孔可以是彼此等距的。在某些实施中，淬火管包括定位在喷嘴处的端盖，其中成角度的通路被定位在端盖内。端盖可构造为装配在挤出模的一部分内，并且冷却流体可被输送通过该端盖。

[0005] 在某些实施例中，冷却流体以基本上对准挤出模的凹槽的一角度进行输送。喷嘴将冷却流体输送为会聚的流体流，其中流体流在流动方向上从第一直径变窄到第二直径，并且第二直径小于第一直径。在某些实施中，该会聚的流体流被成形为基本上符合于挤出模中切口的形状。在某些实施中，冷却流体随着挤出材料退出挤出模而接触该挤出材料。在某些实施例中，在退出挤出模的挤出材料的大约 1/16 英寸到 1 英寸内，或者在退出挤出模的挤出材料的大约 1/8 英寸到 1/2 英寸内，冷却流体接触该挤出材料。

[0006] 在一个方面，提供了一种用于对挤出材料进行淬火的方法，所述方法包括将细长的淬火管定位在挤出模的出口侧，其中淬火管包括喷嘴，该喷嘴定位在挤出模的至少一部分内，将挤出材料按压通过该挤出模，其中挤出材料穿过喷嘴进入到淬火管中，并且随着挤出材料退出挤出模，将冷却流体经由喷嘴输送到挤出材料，其中冷却流体相对于淬火管以一角度进行输送。在某些实施例中，冷却流体可以按基本上对准挤出模的凹槽的一角度进行输送。喷嘴将冷却流体输送为会聚的流体流，其中流体流在流动方向上从第一直径变窄

到第二直径，并且第二直径小于第一直径。在某些实施例中，会聚的流体流被成形为基本上符合于挤出模中切口的形状。冷却流体可以是水。

[0007] 在一个方面，提供了一种淬火系统，所述淬火系统包括：用于将冷却流体沿着淬火管运输的运输装置，该淬火管具有内壁和外壁；通道，该通道处于内壁的内表面内并且接受挤出材料；以及用于将冷却流体以相对于淬火管成一角度输送到挤出材料的输送装置，其中挤出材料通过该输送装置以进入该通道，并且其中淬火管构造为至少部分地在挤出模内延伸。内壁和外壁可以是同心的。在某些实施例中，内壁包括内管，而外壁包括外管。在某些实施例中，挤出模旋转而淬火管并不旋转。冷却流体可以是水。

[0008] 在某些实施例中，淬火系统包括多个孔，所述多个孔沿着淬火管的至少一部分在内壁中，并且这些孔可彼此等距。在某些实施中，淬火系统包括端盖，该端盖定位在输送装置处。端盖可构造为装配在挤出模的一部分中，并且冷却流体可被输送穿过端盖。

[0009] 在某些实施例中，冷却流体以基本上对准挤出模的凹槽的一角度进行输送。输送装置将冷却流体输送为会聚的流体流，其中流体流在流动方向上从第一直径变窄到第二直径，并且第二直径小于第一直径。在某些实施中，该会聚的流体流被成形为基本上符合于挤出模中切口的形状。在某些实施例中，冷却流体随着挤出材料退出挤出模而接触该挤出材料。在某些实施例中，在退出挤出模的挤出材料的大约 1/16 英寸到 1 英寸内，或者在退出挤出模的挤出材料的大约 1/8 英寸到 1/2 英寸内，冷却流体接触该挤出材料。

[0010] 在浏览了本公开之后，本领域技术人员将作出这些实施例的变型和修改。上述特征和方面将以与在此所描述的一个或者多个特征进行任何结合或者再结合（包括多种有依赖性的结合和再结合）的方式实施。在此描述或者图示的各种特征，包括其任何元件，可结合或者集成到其他系统中。此外，某些特征可以省略或者并不实施。

附图说明

[0011] 前述事项和其他目的及优点将在结合所附的附图考虑下面的详细说明的情况下而显而易见，在整个附图中，类似的附图标记表示类似的部件，并且附图中：

[0012] 图 1 示出了说明性的淬火系统的示意图；

[0013] 图 2 示出了说明性的淬火管和端盖的透视图；以及

[0014] 图 3 示出了说明性的淬火管和挤出模的示意图。

具体实施方式

[0015] 为了提供对在此所描述的系统、装置和方法的全面了解，将描述某些说明性的实施例。尽管在此所描述的实施例和特征具体地描述为用于与挤出机系统相关联地使用，但是将知晓的是，下面列出的全部部件、连接机构、制造方法以及其他特征可以适当的方式彼此组合，并且可被改进以及可被应用到将在其他制造过程中使用的系统中，所述其他制造过程包括但并不限于：铸轧、浇铸（up-casting）、其他挤出以及其他制造工序。此外，尽管在此所描述的实施例是关于对由金属坯段所挤出的金属管进行淬火，但是将知晓的是在此所述的系统、装置和方法可被改进以及应用到用于淬火或者通过其他方向冷却任何适当类型材料的系统。

[0016] 在此所描述的用于冷却挤出材料的系统、装置和方法可用于任何适当的挤出系统

打印ID?638979 Pg 6

中，例如包括在 2012 年 10 月 12 日提交的美国专利申请号 13/650,977 中所描述的挤出机系统，其公开内容因而通过引用而全部合并于此。

[0017] 图 1 示出了按照某些实施例的淬火系统 100 的示意图。淬火管 102 包括内壁 104 和外壁 106，在内壁和外壁之间具有通路 108，用于沿着淬火管 102 运输冷却流体。在某些实施例中，外壁 106 可由外管形成，而内壁 104 可由内管形成。如图 1 中所示，例如，冷却流体在箭头 A 的方向上在通路 108 内行进，该通路 108 用作用来将冷却流体传送到挤出材料（诸如，挤出材料 300）的导管。任何适当的冷却流体可用来对挤出材料 300 进行淬火，所述冷却流体包括水、各种矿物油、盐水、合成油，任何适当的冷却流体包括气态流体或者它们的任何组合。内壁 104 和外壁 106 大致同心并且可具有任何适当的厚度，包括两个壁 104/106 之间不同的相应厚度。在某些实施例中，当大致同心的时候，这些壁 104/106 中的一个可以是椭圆的，而另一个是圆形的。淬火管 102 还包括内壁 104 的内表面 104a 内的通道 110，该通道接收挤出材料 300，并且挤出材料 300 在箭头 B 的方向上沿着淬火管 102 行进穿过该通道。

[0018] 淬火管 102 的冷却流体沿着箭头 A 的方向流动到喷嘴 114，该喷嘴形成在淬火管 102 的一个端部处。喷嘴 114 将冷却流体传送到挤出材料 300，并且喷嘴 114 在淬火管 102 中提供了开口 115，挤出材料 300 传过该开口而进入通道 110 中。在某些实施例中，通路 108 可在喷嘴 114 处成角度设置，以沿着流体流 120 以相对于淬火管一角度来传送冷却流体。例如，如图 3 中所示，在喷嘴处形成于通路与淬火管之间的角度被标记为角 a。喷嘴 114 将冷却流体输送为会聚的流体流 120，在该处流体流 120 在流动方向（沿着箭头 A）上从第一直径变窄到第二直径，并且第二直径小于第一直径。在某些实施例中，内壁 104 和外壁 106 之间的通路 108 可以不成角度设置，并且冷却流体在喷嘴处的成角度输送可受到端盖的影响，例如图 2 的端盖 350，其在该处具有成角度的内表面。例如，内壁 104 和外壁 106 可通过相应的内管和外管所形成，这些管沿着淬火管 102 的长度大致笔直，并且端盖可设置用于冷却流体的成角度输送。甚至在通路 108 在喷嘴 114 处成角度的实施例中，将知晓的是淬火管 102 可包含端盖，例如包括图 2 的端盖 350。

[0019] 淬火管 102 构造为至少部分地在挤出模（诸如挤出模 200）中延伸。挤出模 200 包括基板 202，以及在某些实施例中，还包括一块或多块模板 204，它们一起显示为连接到模背板 206。在某些实施例中，挤出模 200 和模背板 206 形成了旋转的模具组件 210，尽管应理解的是淬火管 102 可以用在并不采用旋转的挤出模 200 的挤出系统中。此外，本公开的淬火管 102 并不旋转，尽管将意识到在某些实施例中淬火管 102 可构造为旋转的。旋转的挤出模具组件在 2012 年 10 月 12 日提交的美国专利申请 13/650,981 中详细的进行了说明，其公开的内容在此通过引用而全部合并于此。

[0020] 挤出模 200 通常包括成型件 220，该成型件形成在一块或多块模板 204 中并且具有进口直径 221，该进口直径减小到对挤出材料 300 的外部直径进行设置的一位置处。在如标记 222 所示的该位置处，材料（例如金属坯段 302）已经通过挤出机模具 200 而进行基本上完全变形，继而沿着模板成型件 220 的剩余部分（如果有的话）退出模具 200。例如，在某些实施例中，挤出材料可通过成型件 220 的一部分 224，超过位置 222，之后在出口区域 228 处退出该挤出模 200。然而，在某些实施例中，可能有切口或凹槽 226 形成在挤出模 200 中、超过挤出材料的外部直径得到设置的位置 222 处。进口直径 221 优选地稍微大于金属坯段

打印ID?638979 Pg 7

302 的原始直径，该金属坯段被压入到挤出模 200 中，以防止干扰或者通过其他方式限制金属坯段 302 进入到模具 200。金属坯段 302 可由在挤出机系统中使用的任何适当的材料形成，所述材料包括但并不限于：各种金属（包括铜和铜合金），或者任何其他适当的非铁金属（诸如铝、镍、钛及其合金），含铁金属（包括钢及其他铁合金），聚合物（诸如塑料），或者任何其他适当的材料，或者它们的组合。

[0021] 使用形成在淬火管 102 的一端部处的喷嘴 114 将冷却流体输送到挤出材料 300。如上面讨论的那样，冷却流体沿着流体流 120 相对于淬火管 102（以及挤出材料 300 自身）以一角度输送，从而随着挤出材料退出挤出模 200 而对挤出材料 300 进行淬火。在喷雾淬火过程期间，过多的冷却流体随着挤出材料 300 通常流回到通道 110 中，如箭头 122 所示，或者在喷嘴 114 周围以及在淬火管 102 与模具组件 210 之间流动，如箭头 124 所示。对于沿着箭头 122 的方向流动的过多冷却流体，该冷却流体在淬火管 102 的相反端部处随着挤出材料 300 退出。对于沿着箭头 124 的方向流动的过多冷却流体，冷却流体流过淬火管 102 与支撑衬套 112 之间的工程间隙 126，该支撑衬套位于淬火管 102 与模背板 206/ 基板 202 之间。这些元件之间并且沿着这些元件的工程间隙 126（经由支撑衬套 112）设置用于释放或者排出过多冷却流体。工程间隙 126 的尺寸可进行调节，以改变冷却流体的流体流动性能。通过支撑衬套 112 的方式在淬火管 102 与模背板 206/ 基板 202 之间设置工程间隙 126，改善了热交换过程，这是因为工程间隙 126 的增加允许例如过多冷却流体的流量增加。

[0022] 关于释放或者排出过多冷却流体，在某些实施例中，多个孔 130 可沿着淬火管 102 的至少一部分而设置在内壁 104 中。在一些实施例中，多个孔 130 可彼此等距，尽管它们可以彼此之间以任何适当的空间结构而进行设置。沿着内壁 104 的长度和 / 或直径或者圆周，可以设置任意数量的孔 130，包括例如 30 个孔或者更多的孔。例如，孔 130 显示为沿着内壁 104 的长度，并且图 2 的孔 330 显示为沿着内壁 304 的直径或者圆周。此外，这些孔 130 可具有任何尺寸的直径，包括大约 1/16 英寸的直径，或者任何其他适当的直径。在某些实施例中，至少一些孔 130 可具有彼此不同的相应直径。这些孔 130 可对于过度的冷却流体产生文丘里效应，连同上面所述的工程间隙 126，可在淬火管 102 操作期间增加过多冷却流体的释放。文丘里效应可在冷却流体流过孔 130 的时候导致在挤出方向（箭头 B）上的定向小于 90 度，使用流体流 120 的动能产生了部分真空。

[0023] 正如上面讨论那样，在某些实施例中，在淬火管 102 的喷嘴 114 端部处设置了端盖。例如，图 2 示出了具有端盖 350 的淬火管 302 的透视图。端盖 350 定位在喷嘴 314 处，从而喷嘴 314 的成角度通路（或者在某些实施例中喷嘴 314 的无角度通路）被定位在端盖 350 内部。端盖 350 构造为装配在挤出模的一部分内，并且可构造为承受挤出所导致产生的热量。图 2 还示出了淬火管 302 的内壁 304 和外壁 306，其中箭头 C 表示了冷却流体在内壁 304 与外壁 306 之间通路中的流动方向。冷却流体在内壁 304 和外壁 306 之间沿着箭头方向 C 流动，并且作为流体流 320 而退出端盖 350。喷嘴 314 和端盖 350 将冷却流体输送作为会聚的流体流 320，其中冷却流体 320 在流动方向（沿着箭头 C）上从第一直径变窄到第二直径，并且第二直径小于第一直径。在某些实施例中，流体流 320 的形状可构造为基本上符合于或者互补于挤出模的切口或者凹槽的形状（例如图 1 的挤出模 200 的切口或者凹槽 226）。下面参照图 3 进一步论述在挤出模中形成的各种切口或者凹槽。

[0024] 图 3 示出了按照某些实施例的淬火管喷嘴 400 和挤出模 450 的示意图，其中挤出

打印ID?638979 Pg 8

模 450 包括形成于其中的切口或者凹槽 452。挤出模 450 具有成型件 454，金属坯段沿着成型件被挤出以形成挤出材料。成型件 454 具有进口直径 455，该进口直径减小到成型件 454 设置了挤出材料的外部直径地一位置处。在由标记 456 所示的该位置处，材料已经通过挤出过程而基本上完全变形，挤出材料的外部直径 d 已经被设定，并且该材料可从模具 450 而被挤出。在某些实施例中，切口或者凹槽 452 可形成在挤出模 450 中，以允许冷却流体从淬火管 402 的喷嘴 400 的输送进入。淬火管 402 包括内壁 404、外壁 406 以及在它们之间的通路 408，该通路 408 经由喷嘴 400 而沿着流体流动线 410 所示的方向而输送冷却流体。冷却流体以一角度 a 输送，该角度对准以一角度形成于挤出模 450 中的切口或者凹槽 452。喷嘴 400 将冷却流体输送为会聚的流体流，该会聚的流体流在流动方向上从喷嘴的出口处的第一直径变窄到靠近出口区域 456 的第二直径，其中第二直径小于第一直径。会聚的流体流由此被限制形状，以基本上符合于挤出模 450 中的切口或者凹槽 452 的形状。挤出模 450 中的切口或者凹槽 452 可形成为任何适当的形状。将知晓的是，冷却流体从淬火管 402 的喷嘴 400 输送出所采用的角度可被调整或者改变为任何期望的应用角度 a，以符合于挤出模 450 的切口或者凹槽 452。

[0025] 本公开的淬火管 102 允许相对于挤出材料退出挤出模的位置改进了挤出材料的喷雾淬火。如上所述，淬火管（例如淬火管 102、302、402）构造为至少部分的在挤出模（例如，挤出模 200、450）内延伸。在某些实施例中，淬火管被定位在超过模背板 206 大约 15/16 英寸并且处于挤出模 200 内，尽管可以使用挤出模 200 内的任何位置。该位置连同冷却流体相对于淬火管（以及挤出表面）的成角度流体流动一起已经被计算，来以逆流流型 410 而撞击该挤出件，该流型从旋转模（例如图 1 的出口区域 228 和图 3 的出口区域 456）流过挤出材料而流到挤出材料的出口位置。在某些实施例中，冷却流体可在从挤出模到挤出模出口位置的任意期望距离处接触该挤出材料，该距离包括例如在大约 1/8 英寸内，或者更近。

[0026] 本公开的淬火管（例如图 1 的淬火管 102）可由任何适当的耐用且基本上刚性的材料形成，所述材料包括但并不限于：各种聚合物，诸如聚乙烯（包括高密度聚乙烯、低密度聚乙烯和聚对苯二甲酸乙二醇酯）、聚丙烯、聚氯乙烯、聚苯乙烯、过消耗树脂(post-consumer resins)，或者任何其他适宜的可模压聚合物，所述可模压聚合物包括可生物降解的聚合物，例如聚交酯；各种金属，包括钢、锡、铝、铜、或任何其他适宜的金属或者合金；任何其他适宜的材料；或它们的组合。

[0027] 本发明的端盖（例如图 2 的端盖 350）可由任何适宜的材料形成，该材料优选耐热，包括但并不限于：各种聚合物；金属，包括钢、锡、铝、铜、或者任何其他适宜的金属或者合金；任何其他适宜的材料；或者它们的组合。

[0028] 尽管淬火管系统的上面所描述和图示的实施例中每一个示出了淬火管具有基本上圆形截面，将知晓的是，可采用各种形状来形成淬火管以及淬火管的第一壁和第二壁。例如，淬火管的横截面可具有圆形、椭圆、矩形、三角形、六角形、或者其他任何适宜形状或其它们的组合。

[0029] 前述内容仅仅是说明本公开的原理，这些系统、装置和方法可通过除了所描述的实施例之外的方式进行实施，这些所描述的实施例是为了图示的目的而并不具有限制作用。将知晓的是，在此公开的系统、装置和方法虽然显示出为在挤出机系统中使用，但是可应用于其他制造过程中使用的系统、装置以及方法，包括但并不限于：铸轧、浇铸、其他挤

出、以及其他制造过程。

[0030] 在浏览本公开之后，本领域技术人员可进行变型和修改。所公开的特征可以通过与在此所描述的一个或者多个其他特征进行任何组合或者再组合的方式得到实施。上面描述或者图示的各种特征，包括它们的任何元件，可结合或者集成到其他系统中。

[0031] 此外，某些特征可以省略或者并不实施。

[0032] 在不脱离在此公开的信息范围的情况下，本领域技术人员可以获得各种改变、替代以及更改的实施例。在此引用的全部参考文件通过引用而将它们的全部内容合并到本文中，并且构成为本申请的一部分。

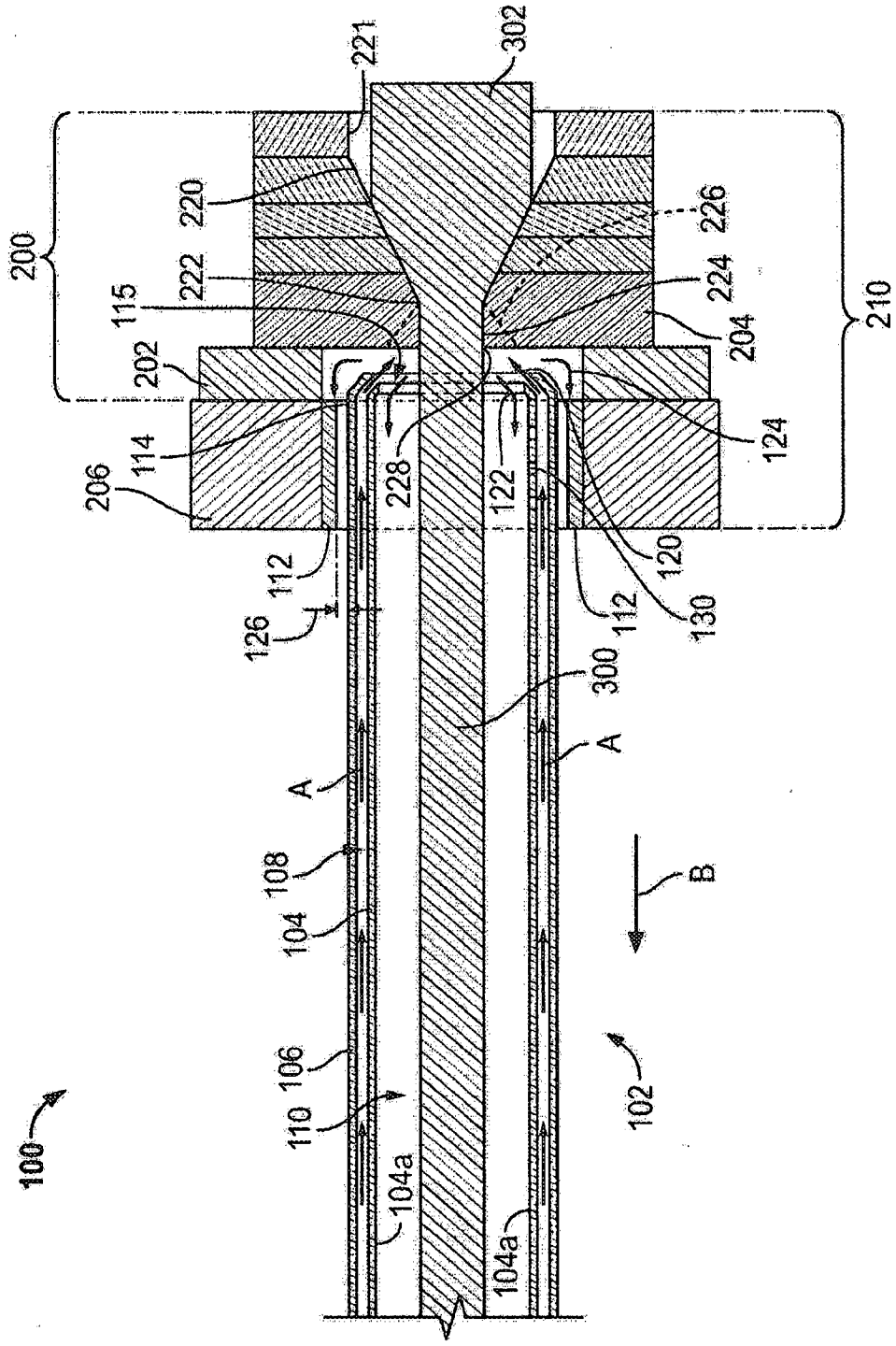
221
302
220
226
200
222
224
115
210
204
202
124
206
114
228
122
112
120
126
112
130
300
A
A
108
B
104
106
102
110
100
104a
104a

图 1

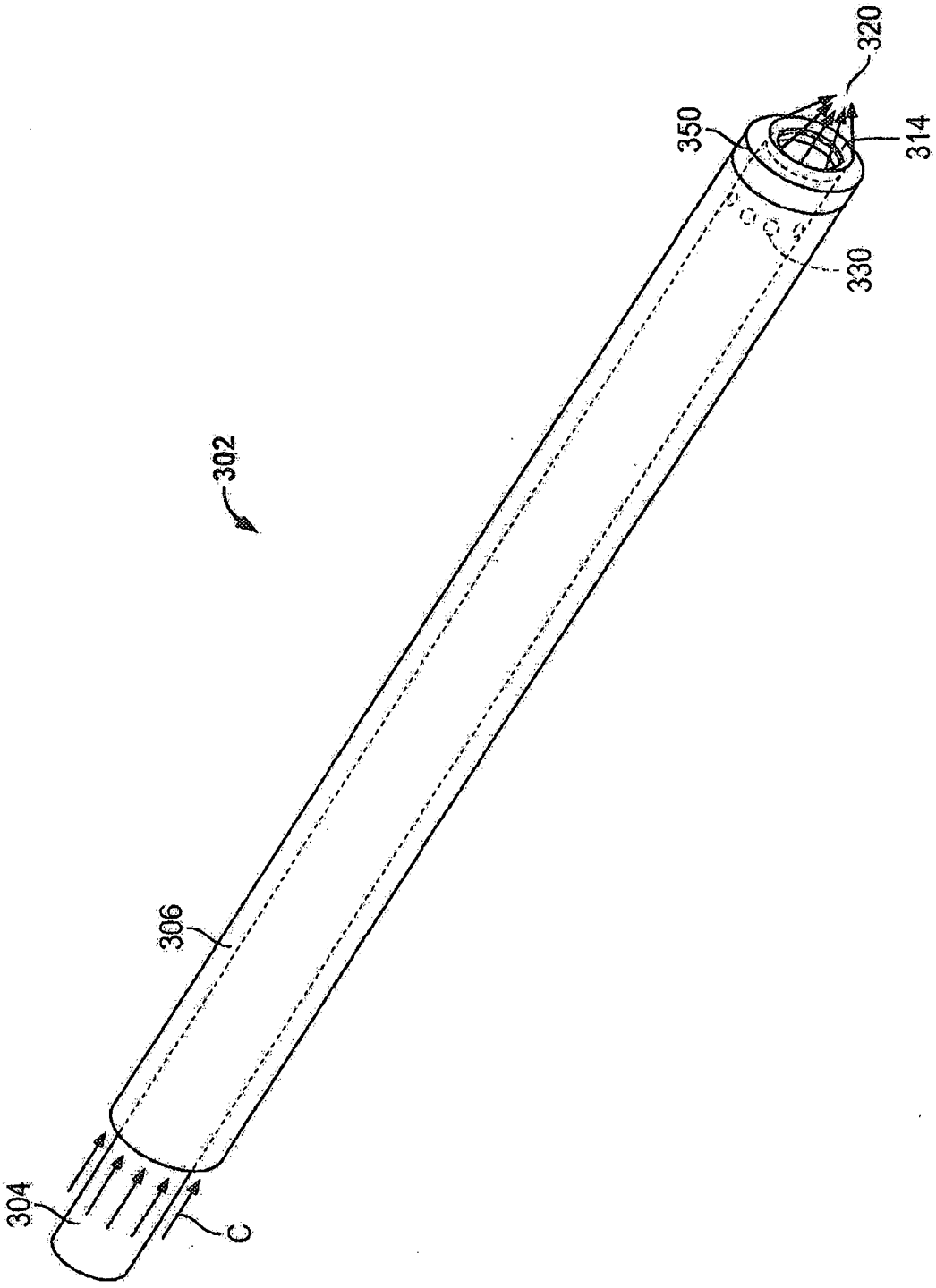

图 2

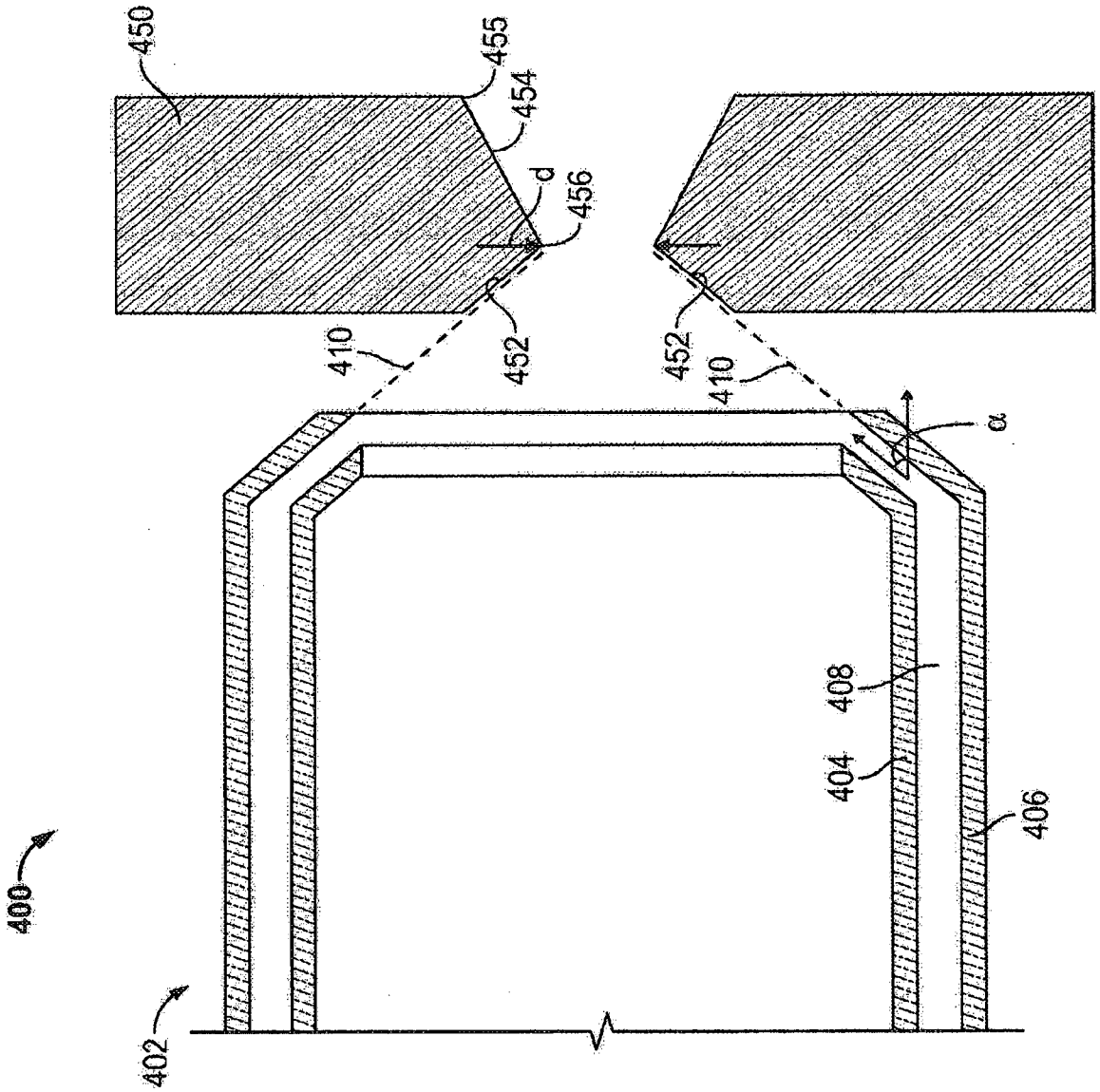

图 3