US 20050138791A1

(19) United States

(12) Patent Application Publication (10) Pub. No.: US 2005/0138791 A1

Black et al. (43) Pub. Date: Jun. 30, 2005

(54) METHOD OF FORMING A LEAD

(76) Inventors: **Damon Ray Black**, Dallas, TX (US); **Terry Daglow**, Allen, TX (US); **John Erickson**, Plano, TX (US); **Robert Earl Jones**, Wylie, TX (US); **B. Reno Lauro**, Murphy, TX (US)

Correspondence Address:
DOCKET CLERK, DM/ANSI
P.O. BOX 802432
DALLAS, TX 75380 (US)

(21) Appl. No.: **11/077,884**

(22) Filed: **Mar. 11, 2005**

Related U.S. Application Data

(60) Continuation of application No. 10/042,992, filed on Jan. 9, 2002, which is a division of application No. 09/760,437, filed on Jan. 12, 2001, now abandoned, which is a division of application No. 09/299,702, filed on Apr. 26, 1999, now Pat. No. 6,216,045.

Publication Classification

(51) **Int. Cl.**[7] **A61N 1/00**

(52) **U.S. Cl.** **29/592.1**

(57) ABSTRACT

An implantable, substantially isodiametric, low resistance implantable lead having at least one electrode positioned in a stimulation/sensing portion of the lead as well as a method of manufacturing the same. At least the stimulation/sensing portion is unitized through partially surrounding and supporting insulation and conductive element(s) of the stimulation/sensing portion with a fused matrix of material having mechanical properties consistent with a body of the lead.

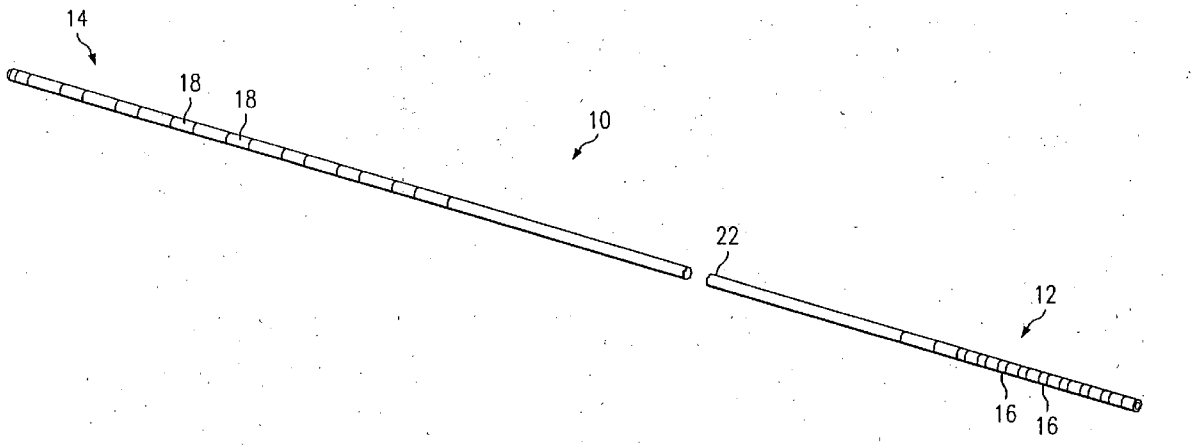

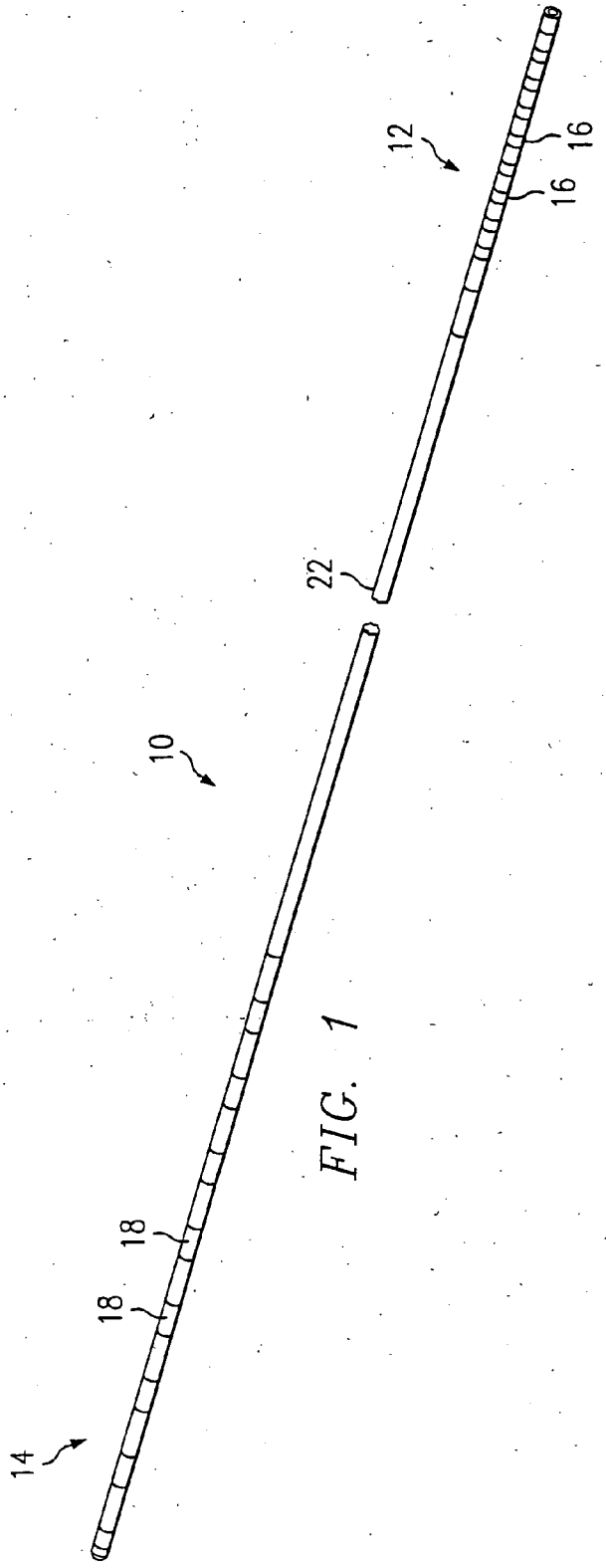

FIG. 1

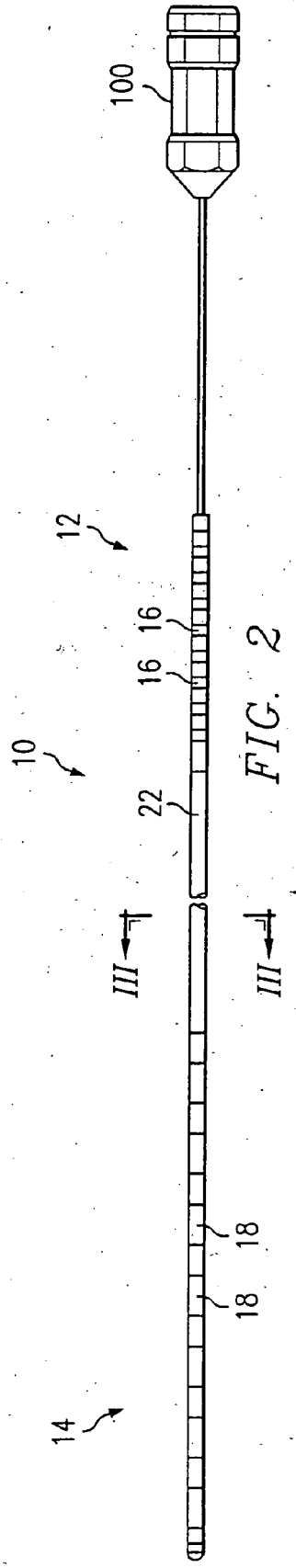

FIG. 2

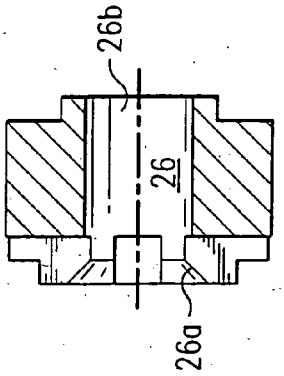

FIG. 6

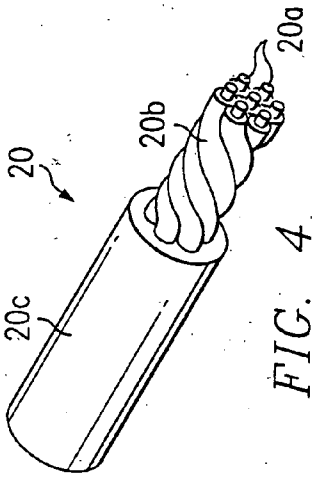

FIG. 4

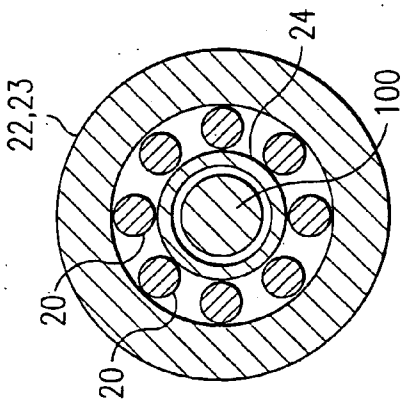

FIG. 3

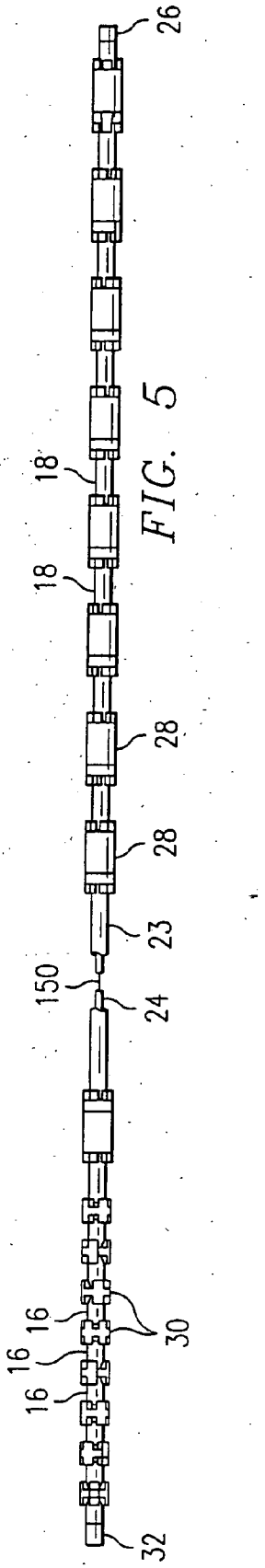

FIG. 5

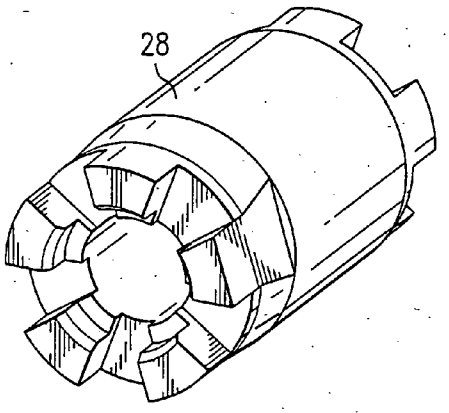

FIG. 7

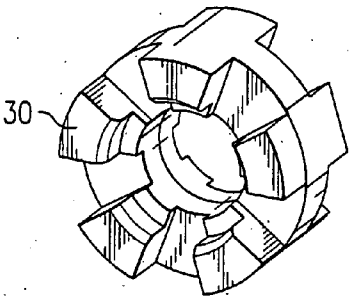

FIG. 8

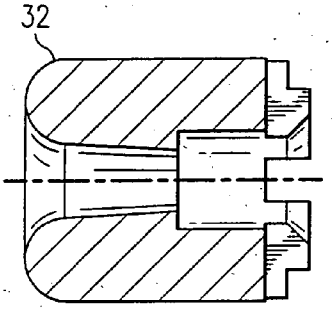

FIG. 9

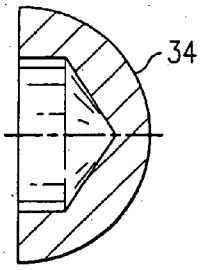

FIG. 10

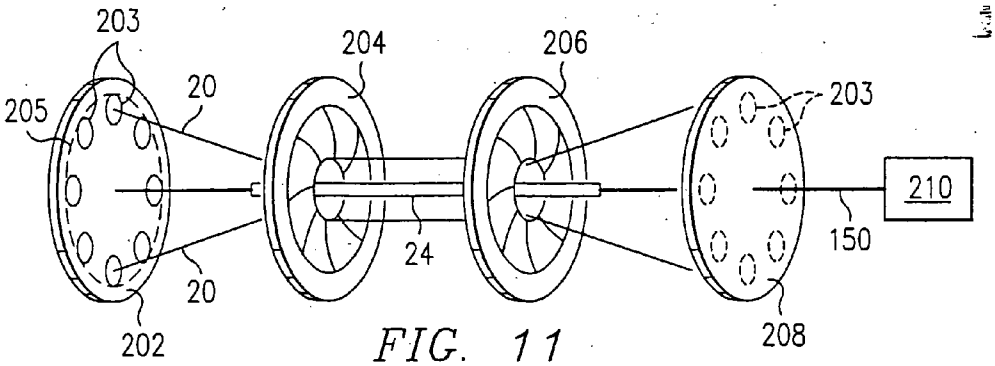

FIG. 11

METHOD OF FORMING A LEAD

RELATED APPLICATIONS

[0001] This is a division of U.S. patent application Ser. No. 09/760,437, filed Jan. 12, 2001, pending, which is a division of U.S. patent application Ser. No. 09/299,702, filed Apr. 26, 1999, issued as U.S. Pat. No. 6,216,045.

FIELD OF THE INVENTION

[0002] The present invention relates to a lead, and in particular, to an implantable lead and a method of manufacturing such lead.

BACKGROUND OF THE INVENTION

[0003] Implantable leads having ring electrodes can be used in a variety of applications, including delivery of electrical stimulation to surrounding tissue, neural or otherwise, as well as measuring electrical energy produced by such tissue. Whether serving in a stimulation capacity or a sensing capacity, such leads are commonly implanted along peripheral nerves, within the epidural or the intrathecal spaces of the spinal column, about the heart, and in the brain.

[0004] Notwithstanding the application, the common requirements for such implantable leads include flexibility, strength, and durability. The extent of such qualities, of course, is dependent upon the nature of the use, for example, temporary or permanent implantation. While material selection and certain construction techniques can be tailored to assist in meeting these prescribed characteristics, an overriding consideration in the design of such leads is achieving at least an isodiametric stimulation/pacing portion thereof.

[0005] The benefits of achieving desired levels of flexibility, strength, and durability are intuitive. The isodiametric characteristic is likely less obvious. Depending upon the application, an isodiametric lead can reduce the potential for damage to the lead during insertion (for example, when a lead is passed through an insertion needle to reach a patient epidural space) and/or placement, improve the ability of the lead to pass through tissue or a vascular system, and is more resistant to being immobilized by tissue growth at a permanent implantation site.

[0006] Differing techniques have been used to produce isodiametric leads. One such technique concerns adhering a plurality of elements (i.e., conductive electrodes, conductive terminals, and spacing insulative tubing material) to produce a generally integral body. Tubing material separates a stimulation/sensing portion (i.e., alternating insulative tubing material and electrodes) from a terminal portion (i.e., alternating insulative tubing material and terminals). The electrodes, terminals, and tubing are independently formed but are intended to be isodiametric. Understandably, dimension variances in any one element can result in a lead having a varying diameter.

[0007] Of further interest, to strengthen the plurality of element interfaces found in the stimulation/sensing portions and terminal portions of these leads, a composition, for example, medical grade epoxy, is injected within an interior of the leads in and about the stimulation/sensing portions and the terminal portions. While this technique does typically effect stabilization and strengthening of these critical regions, the end result can also be that these regions are too rigid and even brittle.

[0008] Other techniques include applying a ring electrode(s) about an exterior surface of insulative tubing that forms the main body of the lead. The insulative tubing may be prepared to receive the electrode, for example, milled to remove an amount of material substantially equal to the material thickness of the ring electrode. Alternatively, the insulative tubing may be unprepared, for example, a ring electrode is simply "crimped" to a diameter substantially equal to the otherwise unadulterated diameter of the tubing.

[0009] For all of the methods described above, a finished lead is still comprised of a plurality of independent components brought together in an effort to form an isodiametric cross-section. Element misalignment, inaccuracies in grinding, variances in electrode material thickness or individual element dimensions, or over/under-crimping could respectively result in at least undesirable variances in lead diameter.

[0010] Accordingly, a need exists for a lead, as well as a method of fabricating such lead, that provides a requisite level of flexibility, strength, and durability, while further providing a true isodiametric body for at least the stimulation/sensing portion of the lead.

SUMMARY OF THE INVENTION

[0011] One aspect of the present invention is directed to an implantable lead including a lead body, having a distal end and a proximal end, whereas the lead body is formed of a material having prescribed mechanical properties. Extending from the distal end of the lead body, a first region includes a plurality of electrodes. A first insulative material, having mechanical properties consistent with the material of the lead body, separates adjacent electrodes. Extending from the proximal end of the lead body, a second region includes at least one terminal. A second insulative material, having mechanical properties consistent with the material of the lead body, separates adjacent terminals. A conductor couples each terminal to at least one corresponding electrode of the plurality of electrodes, wherein the conductor(s) extends along an interior passage defined by the lead body, first region, and second region. In addition to the at least one conductor, the interior passage of the first region is substantially filled with a third insulative material having mechanical properties consistent with the material of the lead body:

[0012] Another aspect of the present invention concerns a method of forming a substantially isodiametric lead. Specifically, such lead has a prescribed diameter and includes at least one electrode separated from at least one terminal by a lead body, wherein the at least one electrode is electrically coupled to the at least one terminal by a conductor passing through a passage defined by at least the lead body. The forming steps include assembling the at least one electrode and the at least one terminal relative to the lead body to form an assembly, including connecting the at least one electrode to the at least one terminal via the conductor. The assembly is subjected to an over-molding process that over molds the assembly with a first material to form an intermediate assembly. This first material is compatible with and has mechanical properties consistent with a material of the lead body. Ultimately, the intermediate assembly is processed to remove all material of the intermediate assembly in excess of the prescribed diameter.

[0013] An object of the present invention is to avoid the shortcomings of known leads and manufacturing techniques for the same.

[0014] Another object of the present invention is to provide a method of forming a lead having a true isodiametric body for at least the stimulation/sensing portion of the lead.

[0015] Another object of the present invention is to provide a lead having a true isodiametric body for at least the stimulation/sensing portion of the lead.

[0016] Another object of the present invention is to provide a lead having a low resistance from a terminal to a coupled electrode to reduce energy consumption during system operation.

[0017] Other aspects, objects, and advantages of the present invention will be apparent to those of ordinary skill in the art having reference to the following Specification together with the provided drawings.

BRIEF DESCRIPTION OF THE DRAWINGS

[0018] In reference to the following figures, like reference numerals and letters indicate corresponding elements:

[0019] **FIG. 1** is a perspective view of a multi-electrode lead in accordance with the present invention;

[0020] **FIG. 2** is a plan view of another embodiment of a multi-electrode lead in accordance with: the present invention;

[0021] **FIG. 3** is a sectional view of the lead of **FIG. 2**, taken along line III-III;

[0022] **FIG. 4** is a perspective view of a preferred conductor;

[0023] **FIG. 5** is a plan view of an assembly of elements on a mandrel used to form a lead in accordance with the present invention;

[0024] **FIG. 6** is a sectional view of a transitional element;

[0025] **FIG. 7** is a perspective view of an electrode spacer;

[0026] **FIG. 8** is a perspective view of a terminal spacer;

[0027] **FIG. 9** is a sectional view of a stylet guide;

[0028] **FIG. 10** is a sectional view of a cap electrode; and

[0029] **FIG. 11** is a schematic representation of one embodiment of an assembly fixture used to assemble a lead in accordance with the present invention.

DETAILED DESCRIPTION OF THE PREFERRED EMBODIMENTS

[0030] Various embodiments, including preferred embodiments, will now be described in detail below with reference to the drawings:

[0031] **FIG. 1** illustrates a preferred embodiment of multi-electrode lead **10**. While the leads illustrated and generally discussed here have eight electrodes, lead **10** of the present invention may be constructed having any number of electrodes (i.e., one or more):

[0032] Lead **10** includes a proximal end **12** and a distal end **14**. The proximal end **12** includes a plurality of electrically conductive terminals **16**, and the distal end **14** includes a plurality of electrically conductive electrodes **18**. While typically each terminal **16** is electrically connected to a single electrode **18** via a conductor **20** (**FIG. 3**), a terminal **16** can be connected to two or more electrodes **18**.

[0033] Terminals **16** and electrodes **18** are preferably formed of a non-corrosive, highly conductive material. Examples of such material include stainless steel, MP35N, platinum, and platinum alloys. In a preferred embodiment, terminals **16** and electrodes **18** are formed of a platinum-iridium alloy.

[0034] Spanning between electrodes **18** of the distal end **14** and terminals **16** of the proximal end **12**, body **22** is formed from a medical grade, substantially inert material, for example, polyurethane, silicone, or the like. While the specific material used for body **22** is not critical to the present invention, body **22** must be non-reactive to the environment of the human body, provide a flexible and durable (i.e., fatigue resistant) exterior structure for the components of lead **10**, and insulate adjacent terminals **16** and/or electrodes **18**.

[0035] Serving as a sheath, body **22** substantially provides the exterior structure that contains the internalized elements of lead **10**. Specifically, body **22** provides an enclosure for each conductor **20** that connects a terminal **16** with one or more electrodes **18**. Each conductor **20** is formed of a conductive material that exhibits the desired mechanical properties of low resistance, corrosion resistance, flexibility, and strength. For consideration, however, it should be appreciated that in the context of a multiple electrode lead **10**, a plurality of conductors **20** are required to fit within the interior of body **22**. Accordingly, the cross-sectional area of each conductor **20** is restricted. As but one example, for a lead in accordance with the present invention that has an outer diameter of approximately 0.055 inches, conductor **20** could be on the order of approximately 0.0065 inches.

[0036] While stranded bundles of stainless steel, MP35N, platinum, platinum-iridium alloy, drawn-brazed silver (DBS) or the like can be used, the preferred embodiment of conductors **20** utilizes wires formed of multi-strands of drawn-filled tubes (DFT), as illustrated in **FIG. 4**. Each strand is formed of a low resistance material **20***a* and is encased in a high strength material **20***b* (preferably, metal). A selected number of strands (seven, for this example) are wound and coated with an insulative material **20***c*. With regard to the operating environment of the present invention, insulative material **20***c* protects the individual conductors **20** if body **22** were breached during use. Wire formed of multi-strands of drawn-filled tubes to form conductors **20**, as discussed here, is available from Temp-Flex Cable, Inc. (City, State).

[0037] In addition to providing the requisite strength, flexibility, and resistance to fatigue, conductors **20** formed of multi-strands of drawn-filled tubes, in accordance with the preferred embodiment, provide a low resistance alternative to other conventional materials. Specifically, a stranded wire, or even coiled wire, of approximately 60 cm and formed of MP35N or stainless steel or the like would have a measured resistance in excess of 30 ohms. In contrast, for the same length, a wire formed of multi-strands of drawn-filled tubes, as illustrated in **FIG. 4**, could have a resistance less than 4 ohms. Accordingly, in a preferred embodiment, each conductor **20**, having a length equal to or less than 60

cm, has a resistance of less than 25 ohms. In a more preferred embodiment, each conductor **20**, having a length equal to or less than 60 cm, has a resistance equal to or less than 10 ohms. In a most preferred embodiment, each conductor **20**, having a length equal to or less than 60 cm, has a resistance of less than 4 ohms.

[**0038**] As an alternative embodiment, body **22** can further encompass stylet tubing **24** (**FIG. 3**). Stylet tubing **24** extends from the proximal end **12** to a point within a distal portion of lead **10**; however, in a preferred embodiment, stylet tubing **24** extends to cap electrode **34**. In cooperative reference to **FIG. 2**, stylet tubing **24** operatively receives stylet **100** for purposes of allowing better control over lead **10** during placement.

[**0039**] Lead Assembly

[**0040**] While the following discussion provides but one example of a sequence of steps to form a lead similar to that illustrated in **FIGS. 2 and 3**. One having ordinary skill in this art shall appreciate that the following steps may be performed in a differing order or otherwise inconsequentially modified to still yield the present invention. Consequently, such minor variations are still regarded as being within the scope of the present invention and should be construed in such manner.

[**0041**] Furthermore, for purposes of illustration, the following example includes certain physical dimensions to illustrate the relationship between elements as well as effects of differing processes. Accordingly, the provided physical dimensions are used merely for example and shall not restrict the scope of the present invention.

[**0042**] The following illustrative example concerns the construction of an eight electrode, epidural lead that accommodates a stylet. One skilled in the art shall appreciate, however, that a lead in accordance with the present invention may have more than or less than eight electrodes and/or have a larger or smaller diameter than the following example and remain within the scope of this disclosure.

[**0043**] In reference to **FIG. 5**, stylet tubing **24** is positioned over mandrel **150**. Stylet tubing **24** has an outer diameter of approximately 0.02 inches:

[**0044**] Depending on the quantity of conductors **20** required (e.g., for this illustration, eight) and the size (i.e., diameter) of such conductors **20**, arranging and securing conductors **20** can be problematic when they are being arranged and secured about an element having the dimensions of stylet tubing **24**.

[**0045**] While any number of techniques may be used to achieve such arrangement of conductors **20** relative to stylet tubing **24**, **FIG. 11** illustrates an example of a fixture **200** that can assist in this task. Specifically, fixture **200** includes first rotary clamp **202**, iris **204**, iris **206**, second rotary clamp **208**, and clamp **210**. Rotary clamps **202** and **208** each include a corresponding plurality of conductor clamps **203**. While not required, it is preferred that the plurality of conductor clamps **203** of each rotary claim **202** and **208** be positioned within an arbitrary perimeter **205**, whereas perimeter **205** should be equal to or greater than a fully-opened inner diameter of either iris **204** or **206**:

[**0046**] As illustrated, mandrel **150**, including stylet tubing **24**, passes through irises **204** and **206** and second rotary clamp **208** and is secured between clamps **202** and **210**. Each conductor **20** similarly passes through irises **204** and **206** and is secured between respective clamps **203** of rotary clamps **202** and **208**.

[**0047**] Conductors **20** secured within fixture **200** are prepared for assembly in that a prescribed amount of insulative material **20***c* is removed at or about the proximal and distal ends of each conductor **20** to expose conductive material **20***a* and **20***b*. As will be discussed later, this exposed conductive material **20***a* and **20***b* of the proximal and distal ends of each conductor **20** is eventually joined to an electrode **18** and a terminal **16**. Accordingly, the exposed conductive material **20***a* and **20***b* is arranged at differing positions relative to stylet tubing **24** to accommodate the serial arrangement of terminals **16** and electrodes **18**.

[**0048**] The rotational nature of rotary clamps **202** and **208** provides unobstructed access to the in-process lead **10**. Specifically, upon securing a single conductor **20** between opposing (or non-opposing) clamps **203**, the rotary clamps **202** and **210** are simply rotated to allow access to unoccupied clamps **203**.

[**0049**] When all of the conductors **20** are strung between claims **202** and **208**, irises **204** and **206** are actuated to close and draw conductor(s) **20** closely about the outer diameter of stylet tubing **24**. When conductor(s) **20** are resting against the outer diameter of stylet tubing **24**, conductor(s) **20** are secured in place. Conductor(s) **20** may be secured using adhesive and/or subjected to a force applied through use of a temporary or permanent restraint, for example, one or more crimped collars.

[**0050**] While the illustration of **FIG. 11** shows but one embodiment of fixture **200**, one skilled in the art should appreciate that other techniques/structures may be employed to position conductors **20** adjacent an exterior surface of stylet tubing **24**. Specifically, clamps **203** of each rotary clamp **202** and **208** could be moveable along respective radial paths (not shown) that would allow strung conductors **20** to be moved from a first position to a second position adjacent the exterior surface of stylet tubing **24**. Alternatively, conductors **20** could initially be secured to one end of stylet tubing **24** and only a single iris could be used to draw the unsecured portions of conductors **20** toward stylet tubing **24**. As yet another alternative, while the various alternatives offered provide some mechanism to control the rate of movement and relative positioning of conductors **20**, an operator could simply manipulate the conductor(s) **20** to manually position and secure them relative to stylet tubing **24**.

[**0051**] Once all conductors **20** are secured to stylet tubing **24**, transitional element **26**, electrode(s) **18**, electrode spacer(s) **28**, outer tubing **23**, terminal spacer(s) **30**, terminal(s) **16**, and stylet guide **32** are positioned over, and concentrically arranged with, stylet tubing **24**. The arrangement of these elements is in accordance with that illustrated in **FIG. 5**.

[**0052**] Transitional element **26** is illustrated in **FIG. 6**. As will be discussed later, transitional element **26** provides a platform to receive cap electrode **34** (**FIG. 10**). Transitional element **26** further provides a durable guide **26***a* to direct a distal end (not shown) of stylet **100** to cap electrode **34** via passage **26***b*. Transitional element **26** is preferably formed of a conductive material, for example, the same material used to form electrodes **18**.

[0053] Electrode spacer **28** is illustrated in **FIG. 7**. Similarly, terminal spacer **30** is illustrated in **FIG. 8**. Functionally, electrode spacer **28** and terminal spacer **30** accurately defines a space between adjacent electrodes **18** and terminals **16**, respectively. Electrode spacer **28** and terminal spacer **30** are preferably formed of the same material as outer tubing **23**. However, spacers **28** and **30** may be formed of a material that differs from that of outer tubing **23**; provided however, any differing material used for electrode spacer **28** and/or terminal spacer **30** must be compatible with and possess largely the same mechanical properties (e.g., non-reactive to the environment of the human body, flexible and durable) as outer tubing **23**. At least for purposes of this example, spacers **28**, and **30** are formed of a polyurethane material, for example, Bionate 75D (Polymer Tech. Group, City, State). As is noted in **FIG. 5**, spacers **28** and **30** should have an outer diameter greater than lead **10**.

[0054] Outer tubing **23** separates electrodes **18** from terminals **16**. In a preferred embodiment, outer tubing **23** has a diameter substantially equal to a diameter of lead **10**. Alternatively, outer tubing **23** may have a diameter less than lead **10**, or a diameter greater than lead **10**. In regard to the latter alternative, outer tubing **23** must have a wall thickness greater than a differential between a radius of lead **10** and a radius (to the outer diameter) of outer tubing **23**. For this particular example, outer tubing **23** has a nominal outer diameter of approximate 0.055 inches.

[0055] Stylet guide **32** is illustrated in **FIG. 9**. Stylet guide **32** provides an inlet to stylet tubing **24**. Stylet guide **32** is preferably formed of conductive material, for example, the same material used to form electrodes **18**. Stylet guide **32**, as well as terminals **16**, electrodes **18**, and transitional element **26**, preferably each have an outer diameter equal to or greater than a nominal diameter of lead **10**. In a more preferred embodiment, these elements each have an outer diameter greater than a nominal diameter of lead **10**.

[0056] Following the assembly of each of the elements described above, terminals **16** and electrodes **18** are joined to their respective conductors **20**. Generally, each terminal **16** (and each electrode **18**) is positioned relative to exposed conductive material **20***a* and **20***b* of a conductor **20** and is joined in a manner that facilitates a transfer of electrical energy, for example, resistance weld or laser weld. Once all terminals **16** and electrodes **18** are secured, stylet guide **32** is secured to a proximal-most terminal **16**, and transitional element **26** is secured to a distal-most electrode **18**. Provided transitional element **26** and stylet guide **32** are formed a conductive material, these elements may be secured using a process consistent with that used to join terminals **16** arid electrodes **18** with conductors **20**. Otherwise, transitional element **26** and stylet guide **32** can be joined using an adhesive, cement or the like.

[0057] The completed assembly (**FIG. 5**) is then over-molded, using well known injection molding techniques, using a material having mechanical properties consistent with a material(s) used to form outer tubing **23**, electrode spacer **28**, and terminal spacer **30**. In a preferred embodiment, the over-molding material and the material of outer tubing **23**, electrode spacer **28**, and terminal **28** are the same.

[0058] This process has the beneficial effect of unitizing the element assembly to form lead **10**. Moreover, electrode spacers **28** and terminal spacers **30** are placed in a state of flow, which, at least in part, results in a filling of regions between terminals **16**/electrodes **18** and stylet guide **24**. Consequently, terminals **16** and electrodes **18** are partially surrounded (i.e., along an interior surface) and supported by a fused matrix of; material. Importantly, as electrode spacers **28** and terminal spacers **30** are formed of a material mechanically equivalent to that of body **22**/outer tubing **23**, the stimulation/sensing portion and terminal portion of lead **10** are stabilized and strengthened while also retaining their flexible properties.

[0059] The over-molded assembly (not shown) is then subjected to a grinding process to remove all excess material. In a preferred process, the over-molded assembly is subject to centerless grinding, wherein excessive material, including over-molded material, electrode material, terminal material, and the like, is removed. Pursuant to the described over-molding and grinding of the entire lead assembly, an isodiametric lead is obtained, which is further free of any gaps or voids between insulative material and conductive material that may otherwise exist in conventional devices.

[0060] Following the grinding process, cap electrode **34** is affixed to transitional element **26** using conventional means, for example, resistance welding, laser welding, or the like.

[0061] While addressed in part above, as the invention has been described herein relative to a number of particularized embodiments, it is understood that modifications of, and alternatives to, these embodiments, such modifications and alternatives realizing the advantages and benefits of this invention, will be apparent to those of ordinary skill in the art having reference to this specification and its drawings. It is contemplated that such modifications and alternatives are within the scope of this invention as subsequently claimed herein, and it is intended that the scope of this invention claimed herein be limited only by the broadest interpretation of the appended claims to which the inventors are legally entitled.

1-14. (canceled)

15. An implantable lead comprising:

a lead body having a distal end and a proximal end having a terminal, wherein the lead body is formed of a material having prescribed mechanical properties;

a first region extending proximally from the proximal end of the lead body, wherein the first region includes at least one terminal, and when the implantable lead includes a plurality of terminals, adjacent terminals are separated by a first insulative material having mechanical properties consistent with the material of the lead body;

at least one conductor electrically coupled to the at least one terminal, and

wherein in addition to the at least one conductor, a first portion of an interior passage of the first region is substantially filled with a second insulative material having mechanical properties consistent with the material of the lead body.

16. An implantable lead in accordance with claim 15 wherein the first insulative material and the second insulative material are the same.

17. An implantable lead in accordance with claim 15 wherein the first insulative material, the second insulative material, and the material of the lead body are the same.

18. An implantable lead in accordance with claim 15 wherein the at least one conductor is formed of stranded wire and has a resistance equal to or less than 25 ohms for a conductor length equal to or less than 60 cm.

19. An implantable lead in accordance with claim 15 wherein an outer diameter of the lead body is approximately 0.05 inches.

20. An implantable lead in accordance with claim 15 further comprising a stylet guide, positioned within a second portion of the interior passage defined by the lead body and the first region.

21. An implantable lead in accordance with claim 15 wherein the implantable lead is substantially isodiametric.

22. An implantable lead in accordance with claim 15 wherein the second material is a fused matrix.

23. An implantable lead in accordance with claim 15 wherein the at least one conductor passes through the lead body and the first region.

24. An implantable lead in accordance with claim 23 wherein the interior passage is also defined within a second region extending proximally from the proximal end of the lead body, and in addition to the at least one conductor, the interior passage of the second region is substantially filled with a third insulative material having mechanical properties consistent with the material of the lead body.

25. An implantable lead in accordance with claim 24 wherein the first insulative material, the second insulative material, and the material of the lead body are the same.

26. An implantable lead in accordance with claim 15 wherein a second region extends distally from the distal end of the lead body, wherein the second region includes a plurality of electrodes, and adjacent electrodes are separated by a third insulative material having mechanical properties consistent with the material of the lead body.

27. An implantable lead in accordance with claim 26 wherein the at least one conductor is electrically coupled to at least one corresponding electrode of the plurality of electrodes.

28. An implantable lead in accordance with claim 15 wherein each conductor extends along at least one interior passage of the lead body.

29. An implantable lead in accordance with claim 15 wherein the corresponding terminal is joined to the at least one conductor by a laser weld.

30. An implantable lead in accordance with claim 15 wherein the plurality of terminals equals eight.

31. An implantable lead comprising:

a lead body having a distal end and a proximal end having a terminal, wherein the lead body is formed of a material having prescribed mechanical properties;

a first region extending distally from the distal end of the lead body, wherein the first region includes a plurality of terminals, and adjacent terminals are separated by a first insulative material having mechanical properties consistent with the material of the lead body;

at least one conductor electrically coupling at least one of the plurality of terminals with at least one corresponding electrode of the plurality of electrodes, wherein the at least one conductor extends through at least a portion of each of the lead body and the first region; and

wherein the material(s) forming the first region has mechanical properties consistent with the material of the lead body.

32. An implantable lead in accordance with claim 31 wherein the material(s) forming the first region, which supports the plurality of terminals and carries the at least one conductor, is a fused matrix.

33. An implantable lead in accordance with claim 31, wherein each of the plurality of conductors extends along the lead body.

34. An implantable lead in accordance of claim 31, wherein the electrodes are located at a second region extending distally from the distal end of the lead body.

35. An implantable lead comprising:

a lead body having a distal end and a proximal end having a terminal, wherein the lead body is formed of a material having prescribed mechanical properties;

a stimulation portion extending distally from the distal end of the lead body, wherein the stimulation portion includes a plurality of electrodes, and adjacent electrodes are separated by an insulative material having mechanical properties consistent with the material of the lead body;

at least one conductor electrically coupling the terminal with at least one corresponding electrode of the plurality of electrodes, wherein the at least one conductor extends through at least a portion of each of the lead body and the stimulation portion; and

wherein at least the stimulation portion is formed from a substantially solid, fused matrix of materials having consistent mechanical characteristics, and the fused matrix of material(s) supports the plurality of electrodes and the at least one conductor extends at least partially therethrough.

* * * * *