C. E. VANCE.

BLOW-OFF VALVE.

APPLICATION FILED FEB. 15, 1912.

1,072,796.

Patented Sept. 9, 1913.

Fig. 1.

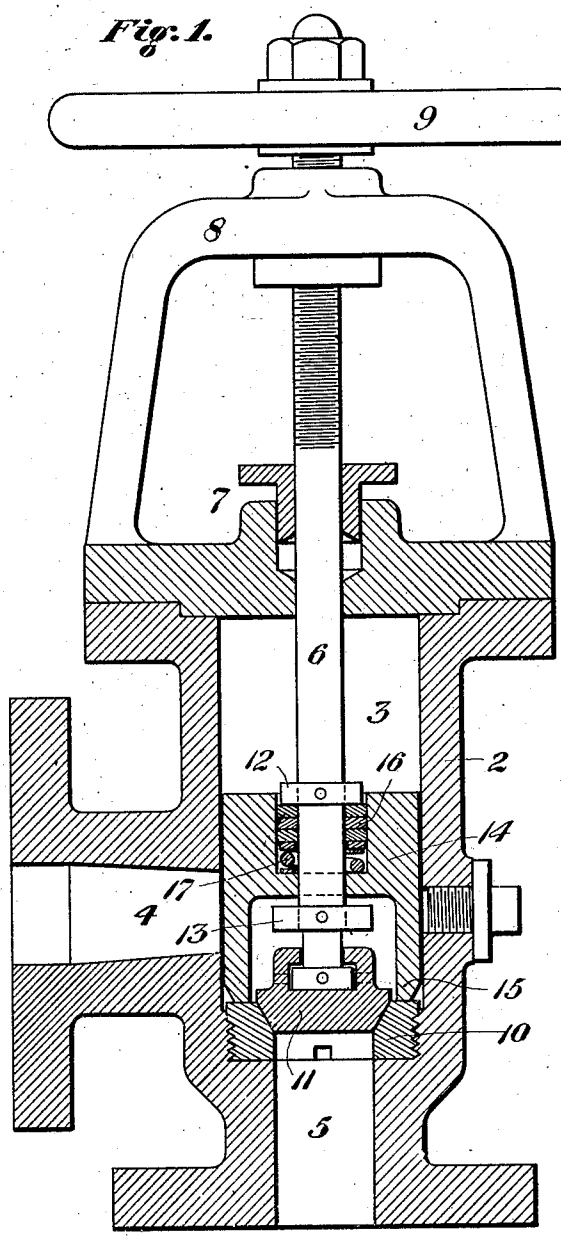

Fig. 2.

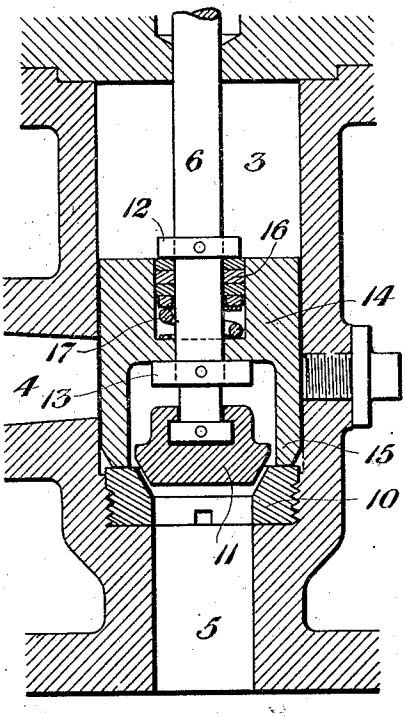

Witnesses:

Jo. Baily Brown

Wal Eckman

Inventor

Charles E. Vance

by O. M. Clarke

his attorney

UNITED STATES PATENT OFFICE.

CHARLES E. VANCE, OF PITTSBURGH, PENNSYLVANIA.

BLOW-OFF VALVE.

1,072,796. Specification of Letters Patent. Patented Sept. 9, 1913.

Application filed February 15, 1912. Serial No. 677,783.

To all whom it may concern:

Be it known that I, CHARLES E. VANCE, a citizen of the United States, residing at Pittsburgh, in the county of Allegheny and State of Pennsylvania, have invented certain new and useful Improvements in Blow-Off Valves, of which the following is a specification.

My invention consists of an improved blow off valve construction adapted to close a circulation port by means of a double valve mechanism, carried on a single stem, constructed and adapted to operate in the manner hereinafter more fully set forth.

In the drawings: Figure 1 is a vertical sectional view through the device, showing both valves seated. Fig. 2 is a partial similar view showing the main valve partly raised.

The valve structure is generally similar to others of well known form, comprising a casing 2 having an interior chamber 3, an inlet opening 4, an outlet opening 5, a valve stem 6 extending through a stuffing box 7 and an arbor or frame 8, and provided with a hand wheel 9. Within the valve chamber is a valve seat, preferably formed of an inserted bushing 10, within which seats the main valve 11 rotatably mounted on the lower end of stem 6 and operable in the usual way to open or close the circulation of fluid through the valve. Surrounding the stem 6 and journaled upon it between an upper collar 12 and a lower collar 13, is the secondary valve 14 in the form of a shell, having a depending skirt 15 adapted to substantially fill the cylindrical chamber 3 and to seat by its lower edges upon the upper face of bushing 10. Between the collar 12 and the middle journaled portion of the valve 14 is inserted a packing 16 of any suitable kind as asbestos cord, hemp, etc. and also a coiled spring 17. The effect of the spring is to hold the secondary valve 14 downwardly against collar 13, as in Fig. 2, and in an advanced position with relation to main valve 11, so that the edge of the skirt 15 will seat on bushing 10 before the main valve 11 seats within it. By this arrangement the double valve may be operated by the single stem 6 and entirely opened for full feed through the ports 4 and 5. Upon closing the valve, the port 4 will be gradually closed off and the main volume of the fluid throttled by valve 14, while still allowing for slight leakage through port 5, after the skirt 15 is seated. Further adjustment of stem 6 will tightly seat the main valve 11, while exerting additional spring pressure on the secondary valve 14. By this construction I am enabled to easily open and close a valve of very considerable size against heavy pressure, and to accurately control the flow or supply.

The device is very simple and cheap, composed of few parts, durable, and not liable to derangement, and may be made in any desired size.

What I claim is:

1. The combination with a valve chamber having a circulation opening therethrough and a valve seat, of an adjusting stem having abutments and provided with a primary valve, and a relatively movable secondary valve mounted directly on said stem between said abutments, substantially as set forth.

2. The combination with a valve chamber having a circulation opening therethrough and a valve seat, of an adjusting stem having abutments and provided with a primary valve, and a relatively movable spring-controlled valve mounted directly on said stem between said abutments, substantially as set forth.

3. The combination with a valve chamber having a circulation opening therethrough and a valve seat, of an adjusting stem having abutments and provided with a primary valve, and a relatively movable secondary valve mounted directly on said stem between said abutments, each of said valves being independently operative by said stem and adapted to engage said valve seat, substantially as set forth.

4. A valve casing having a cylindrical chamber, a supply port, a delivery port, a bushing encircling the delivery port, an adjusting stem having abutments and provided with a primary valve, and a longitudinally movable spring-pressed secondary valve mounted directly on said stem between said abutments surrounding said primary valve and operable with said valve to engage the bushing, substantially as set forth.

5. The combination with the valve seat bushing surrounding the outlet opening, of an adjusting stem having a terminal valve, collars secured to the stem above said valve, a secondary valve engaging the stem between said collars, and a spring between one

of said collars and said secondary valve, substantially as set forth.

6. The combination with the valve seat bushing surrounding the outlet opening, of an adjusting stem having a terminal valve, collars secured to the stem above said valve, a secondary valve engaging the stem between said collars, and packing means and a spring interposed between one of said collars and said secondary valve, substantially as set forth.

7. The combination with a valve chamber having a circulation opening therethrough and a valve seat, of an adjusting stem provided with abutments and having secured to its terminal a positively seating valve adapted to engage said valve seat, a secondary valve mounted directly on the adjusting stem between said abutments and also adapted to engage the valve seat, and cushioning devices between said secondary valve and the stem adapting the stem to move after said secondary valve is seated, substantially as set forth.

8. The combination with a valve chamber having a circulation opening therethrough and a valve seat, of an adjusting stem having secured to its terminal a positively seating valve adapted to engage said valve seat, limiting abutments secured to the valve stem beyond said positively seating valve, a secondary valve mounted directly on the adjusting stem between said abutments and also adapted to engage the valve seat, and cushioning devices between said secondary valve and one of said abutments adapting the stem to move after said secondary valve is seated, substantially as set forth.

In testimony whereof I hereunto affix my signature in the presence of two witnesses.

CHARLES E. VANCE.

Witnesses:
C. M. CLARKE,
FREDK. STAUB.