(12) INTERNATIONAL APPLICATION PUBLISHED UNDER THE PATENT COOPERATION TREATY (PCT)

(19) World Intellectual Property Organization
International Bureau

(43) International Publication Date
18 December 2014 (18.12.2014)

WIPO | PCT

(10) International Publication Number
WO 2014/201356 A1

(51) International Patent Classification:
H02J 7/32 (2006.01)

(21) International Application Number:
PCT/US2014/042308

(22) International Filing Date:
13 June 2014 (13.06.2014)

(25) Filing Language: English

(26) Publication Language: English

(30) Priority Data:
61/835,170 14 June 2013 (14.06.2013) US

(71) Applicant: **SOLE POWER, LLC** [US/US]; 6024 Broad Street, Suite 2R, Pittsburgh, PA 15206 (US).

(72) Inventors: **ALEXANDER, Hahna, Ruth**; 626 Maryland Avenue, #10, Pittsburgh, PA 15232 (US). **DAVITIAN, Davit, Frenjul**; 351 Atlanta Drive, Pittsburgh, PA 15228 (US). **KAHN, Elliot, Isaac**; 417 Denniston Street, #4, Pittsburgh, PA 15206 (US). **NENE, Lucas, O.**; 5500 Hays Street, Pittsburgh, PA 15206 (US). **STANTON, Matthew, James**; 535 Gettysburgh Street, Pittsburgh, PA 15206 (US).

(74) Agents: **SINGER, James, M.** et al.; Fox Rothschild LLP, Princeton Pike Corporate Center, 997 Lenox Drive, Bldg. #3, Lawrenceville, NJ 08648 (US).

(81) Designated States *(unless otherwise indicated, for every kind of national protection available)*: AE, AG, AL, AM, AO, AT, AU, AZ, BA, BB, BG, BH, BN, BR, BW, BY, BZ, CA, CH, CL, CN, CO, CR, CU, CZ, DE, DK, DM, DO, DZ, EC, EE, EG, ES, FI, GB, GD, GE, GH, GM, GT, HN, HR, HU, ID, IL, IN, IR, IS, JP, KE, KG, KN, KP, KR, KZ, LA, LC, LK, LR, LS, LT, LU, LY, MA, MD, ME, MG, MK, MN, MW, MX, MY, MZ, NA, NG, NI, NO, NZ, OM, PA, PE, PG, PH, PL, PT, QA, RO, RS, RU, RW, SA, SC, SD, SE, SG, SK, SL, SM, ST, SV, SY, TH, TJ, TM, TN, TR, TT, TZ, UA, UG, US, UZ, VC, VN, ZA, ZM, ZW.

(84) Designated States *(unless otherwise indicated, for every kind of regional protection available)*: ARIPO (BW, GH, GM, KE, LR, LS, MW, MZ, NA, RW, SD, SL, SZ, TZ, UG, ZM, ZW), Eurasian (AM, AZ, BY, KG, KZ, RU, TJ, TM), European (AL, AT, BE, BG, CH, CY, CZ, DE, DK, EE, ES, FI, FR, GB, GR, HR, HU, IE, IS, IT, LT, LU, LV, MC, MK, MT, NL, NO, PL, PT, RO, RS, SE, SI, SK, SM, TR), OAPI (BF, BJ, CF, CG, CI, CM, GA, GN, GQ, GW, KM, ML, MR, NE, SN, TD, TG).

Published:

— *with international search report (Art. 21(3))*

— *before the expiration of the time limit for amending the claims and to be republished in the event of receipt of amendments (Rule 48.2(h))*

(54) Title: ENERGY STORAGE SYSTEM FOR FOOT-POWERED DEVICES

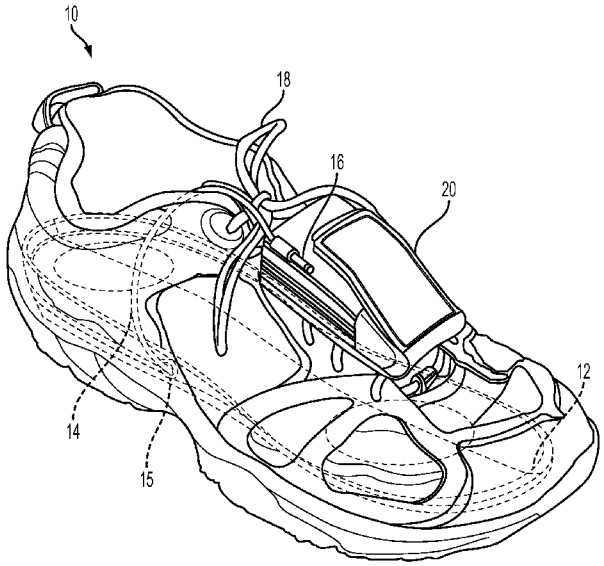

FIG. 1

(57) Abstract: An energy generation and storage system includes an energy generation device within a component of a shoe. The system also includes an energy storage device having an attachment structure configured to removably secure the energy storage device to the shoe or the shoe's wearer and electrically connect to the energy generation device via a power cord.

WO 2014/201356 A1

ENERGY STORAGE SYSTEM FOR FOOT-POWERED DEVICES

RELATED APPLICATIONS AND CLAIM OF PRIORITY

[0001] This patent document claims priority to United States provisional patent application 61/835,170, filed June 14, 2013. The disclosure of the priority document is fully incorporated into this document by reference.

BACKGROUND

[0002] In remote locations or locations without reliable power systems, it can be difficult to keep batteries for portable electronic devices charged. Individuals who hike, camp or boat may go many hours or days without being near an energy source. Even populated areas may not always have reliable energy sources available, as weather systems, unstable governing bodies and lack of resources can cause power shortages or outages.

[0003] United States Patent Application Pub. No. 2014/0145450, filed April 29, 2013 and fully incorporated into this document by reference, describes a wearable energy harvesting mechanism that is installed in a person's shoe and that generates energy as the person steps downward on the mechanism.

[0004] The inventors have determined that it is useful to improve devices such as that described above. In addition, energy storage systems that can work with wearable energy harvesting mechanisms are also desirable.

[0005] This patent document describes devices that solve problems such as those described above.

SUMMARY

[0006] In an embodiment, an energy generation and storage system includes an energy generation device formed as a component of a shoe. The system also includes an energy storage device that includes an attachment structure configured to removably secure the energy storage device. The storage device may electrically connect to the energy generation device via a power cord. The energy storage device may include a holster and a battery unit having at least one power port. The holster includes a cavity that holds the battery unit. The holster also may include one or more fastening structures comprising a flap that, when installed, is threaded around at least one rung of a shoelace of the shoe and that at least partially covers an opening that receives the battery into the cavity.

[0007] Optionally, the holster also may include a receiving channel that, when installed, receives a portion of the shoelace that is proximate an ankle area of the shoe. The holster's flap may include a shoelace-engaging portion and a fastening portion, wherein the shoelace-engaging portion is wider than the fastening portion. If so, the holster also may include a buckle that is sized and positioned to receive the fastening portion.

[0008] In some embodiments, the component of the shoe that includes the generation device may include an insole that has a port positioned along a side of the insole in an arch area of the insole. The power cord extends from the port to the storage unit.

[0009] The battery unit may include lights configured to selectively illuminate based on a level of charge of the battery unit. In some embodiments, the battery unit also may include a rectifier, a first regulating circuit, a battery indicator circuit, and a second regulating circuit.

[0010] Optionally, the battery unit also may include a transmitter connected to an output of the battery indicator circuit, wherein the transmitter is configured to transmit a signal that contains an indicator of a level of charge in the battery unit. If so, the transmitter

may interact with a mobile electronic device that is within a communication range of the transmitter. The mobile electronic device may execute or otherwise access an application that causes the device to receive the signal that contains an indicator of a level of charge in the battery unit, and to output a graphic indication of the level of charge on a display of the mobile electronic device. The application also may cause the device to be able to identify a time period (such as a default or user-selected time period), determine a measure of an amount of energy generated by the energy generation device during the time period, and cause the display to output a graphic indication of the amount of energy generated during the time period.

BRIEF DESCRIPTION OF THE DRAWINGS

[0011] FIG. 1 illustrates a shoe having an energy generation device in the insole and an energy storage device attached to the shoe.

[0012] FIG. 2 illustrates an alternate structure for securing an energy storage device to a person.

[0013] FIG. 3 illustrates an example of a battery unit of an energy storage device being used to charge a portable electronic device.

[0014] FIGs. 4 and 5 illustrate an example of a holster that is used to secure a battery unit of an energy storage device to a shoe that is equipped with an energy generation system.

[0015] FIGs. 6A and 6B illustrate an alternate embodiment of a holster.

[0016] FIG. 7 illustrates an alternate embodiment of an energy storage device that may not require a separate holster.

[0017] FIG. 8 illustrates an alternate embodiment using a prosthetic foot.

[0018] FIGs. 9 and 10 are circuit diagrams of various example interior components of a battery unit, along with external devices with which the battery unit may interact.

DETAILED DESCRIPTION

[0019] As used in this document, any word in singular form, along with the singular forms "a," "an" and "the," include the plural reference unless the context clearly dictates otherwise. Unless defined otherwise, all technical and scientific terms used in this document have the same meanings as commonly understood by one of ordinary skill in the art. All publications mentioned in this document are incorporated by reference. As used in this document, the term "comprising" means "including, but not limited to." The word "plurality" is intended to mean "more than one."

[0020] FIG. 1 illustrates an example shoe **10** having an energy generation mechanism embedded within or under the shoe's insole **12**. The energy generation mechanism may be one such as that described in United States Patent Application Pub. No. 2014/0145450, filed April 29, 2013, or variations of such a mechanism that generate energy in response to being activated by a human stepping action. The energy generation mechanism may be embedded within the insole as shown, or within another component of the shoe, such as the sole. When this document uses the term "shoe," it is intended to generally refer to any item of footwear, including but not limited to a shoe, boot, sandal, sock or other footwear item.

[0021] A power cord **14** leads from the energy generation mechanism via a port **15** in the insole **12** or other shoe component to an energy storage unit **20**. The power cord may be equipped with a plug **16** so that it may be removed from the storage unit **20**. In various embodiments, the power cord **14** may include one or more conductors surrounded by an insulating material. The cord is a conductor and may be round, oval shaped, or in some embodiments shaped so that a side of the cord having a widest dimension abuts the wearer's foot while a side having a shorter dimension extends away from the foot. This relatively flat shape may result in more comfort for the user within the shoe. In addition, the port **15** may

be positioned on a side of the insole in a location between the heel area and the ball of the wearer's foot, and in some embodiments under the instep and/or in the area of the medial arches of the wearer's foot. In this way, the wire may extend upward from the insole in a location that is in proximate and in front of the ball of the wearer's ankle (i.e., the medial malleolus or the lateral malleolus) so that the wire does not cause discomfort to the wearer. Other locations are possible.

[0022] The power storage unit **20** may include features that enable it to be removably attached to a shoelace **18** or other component of the shoe **10** as shown in FIG. 1. An example of this configuration will be described in more detail below. An alternate arrangement is shown in FIG. 2, in which the power storage device **20** is removably attached to a wearable securing band **50**. In some embodiments, the band **50** may be made of fabric and may have a fastening component **52** such as overlapping hook-and-loop (e.g., Velcro®) end components, clips, zippers, snaps or other fasteners so that the band can be wrapped around a person's ankle or other extremity. Alternatively, the band may be made of an elastic material so that it can be slipped over the extremity to be worn. The power storage device **20** may be removably attached to the band **50** by a securing clip **54**, or by another securing structure such as by hook-and-loop connectors, attachment fins located on the sides of the storage device, or other structures. In addition, the band **50** may include a pocket or other receiver to accept and hold the storage device **20**. In addition, the band **50** may include an outer layer made of a durable fabric, leather or synthetic material, along with an inner comfort layer made of a softer and/or moisture-wicking material.

[0023] FIG. 3 illustrates an example battery unit **22** of an energy storage device while it is being used to charge a mobile electronic device **30**, in this case a mobile phone. The battery unit **22** includes a battery contained within a housing, at least one power port **24** to which a power wire **32** may be attached to transfer energy to the battery from a power source

(to charge the storage device) or from the battery to a portable electronic device **30** (to transfer energy from the battery to the electronic device). The device may include multiple power ports to charge multiple devices at the same time, or to both receive a charge from the wearable energy generation system and transfer the charge to a mobile device at the same time. In some embodiments, some or all ports may provide both input and output functions, or certain ports may be input ports while others may be output ports. The ports may be Universal Serial Bus (USB) ports, a plug or socket to receive direct current (DC) power. The battery unit may include other components as well, such as an on-off switch that can be used to control discharging of the device.

[0024] The battery unit **22** or another part of the energy storage device may include one or more charge indicators **26** such as light emitting diodes (LEDs) or other lights that depict a level of activity of the device. For example, all of the LEDs may illuminate when the battery is fully charged, while progressively fewer than all of the LEDs may illuminate when the battery is less than fully charged. The LEDs may blink or change color to illustrate various activities such as charging or discharging.

[0025] The battery unit **22** may hold one or more rechargeable batteries, such as nickel cadmium (NiCd), nickel metal hydride (NiMH), lithium ion (Li-ion) or lithium ion polymer (Li-ion polymer) batteries, along with electronic circuitry for charging and discharging the batteries.

[0026] FIGs. 4 through 6 illustrate how an embodiment of the energy storage device **20** of FIG. 1 may be attached to a shoelace **18** of a shoe. When this document uses the term "shoelace," it is intended to refer to laces, straps or other structures that have multiple rungs and that are positioned over the instep of the wearer's foot between the ankle and the toes. This embodiment includes a holster **40** that defines a cavity **41** to receive the battery unit **22**. The holster may be made of fabric, synthetic material, a polymer or other material. The

cavity **41** is substantially closed on at least four sides, and a front portion (and optionally a rear portion) includes an opening that may be accessed via a flap **42.** A user may insert the battery unit **22** into the cavity **41** via this opening, and thread the flap **42** under one or more rungs of the shoelace **18** that are closest to the toe of the shoe. The user may then pull the flap **42** back over the shoelaces **18** and secure the flap to the holster **40** via a fastening structure such as hook-and-loop components, one or more buckles, snaps, clips or other fasteners, or any combination of these, as shown in the example of FIG. 5. FIG. 5 also illustrates that the holster **40** may include one or more rear channels **47** to be located near the ankle area through which a user may thread one or more upper rungs of the shoelace **18**, thus securing the holster **40** to the shoe via the shoelace **18**. The channels may be, for example, one or more loops or rings of fabric, polymer or synthetic material secured to a rear area of the holster.

[0027] FIGs. 6A and 6B illustrate a top perspective view and a bottom perspective view, respectively, of an alternate holster **50** in which the flap **52** includes a first shoelace-engaging component **57** and a second fastening component **58**. As with other embodiments, the battery **62** fits inside of a cavity **51** formed by the holster. The shoelace-engaging component **57** of the flap is wider than the fastening component **58** so that the shoelace-engaging component has an increased width to wrap around a rung of the shoelace. The fastening component **58** may be narrower and sized to fit within a buckle **55** positioned on the outside of the holster. After it is threaded through the buckle **55**, the fastening component may be pulled back and attached to itself or to another component of the holster via hook-and-loop fasteners, snaps, a slot, or another connecting component. In this embodiment, the flap **52** wraps all the way to the rear of the holster and thus also forms the channel **57** that receives an upper rung of the shoelace.

[0028] FIG. 7 illustrates an alternate embodiment of a battery unit **70** of an energy storage device that includes a protective case with a battery contained inside the case. This embodiment may or may not be used with a holster. The unit may include one or more charge indicators **74** such as lights that selectively brighten or dim to indicate the level of charge of the battery, and one or more input/output ports **75, 76** for transferring charge to and from the battery. The device also may include a clip or other connector **78** that may be used to fasten the battery unit to a shoe. In this embodiment, the clip **78** may slip underneath multiple rungs of a shoelace to be held in place. Optionally, the battery unit also may have a switch **73** that enables the device to be turned on and off, so that the device only discharges when the switch **73** activates the battery unit to an "on" mode.

[0029] In some embodiments, the battery unit, the holster or both may be made of a water-proof or water-resistant material. In addition, the battery unit's power ports may be made of waterproof and/or dustproof components, such as waterproof USB ports that are now known or which become known in the future. The battery unit, the holster or both also may include an opening or transparent window in a location that corresponds to the LEDs, so that the LEDs are visible to the wearer.

[0030] FIG. 8 illustrates an alternate embodiment in which the "shoe" is a prosthetic foot **80**. The foot includes or is used with a housing **81** that is generally shaped as a shoe, or as a foot to fit within the shoe. The base of the housing **81** includes an insole area in which the energy generating device **83** is installed. The housing may be installed within the foot as shown, the housing may be integral with the foot, or a two-part housing may include a detachable component that may be removed from the foot, such as a detachable sole that contains the energy generating device **83**. When a person wears the prosthetic foot and exerts downward pressure on the foot and housing, the energy generating device **83** generates energy. The housing also includes a holster **82** that removably receives an energy storage

device **85**. The energy generating device **83** and energy storing device **85** may be connected via a power cable when the energy storage device **85** is seated within the holster **82**. Optionally, in embodiments where the prosthetic foot includes one or more flexible springs **84** the energy generating device **83** may be positioned along the base of a the spring at a pressure point where the spring will exert downward pressure toward the bottom of the housing **81** when a person walks on the prosthetic foot.

[0031] FIGs. 9 and 10 are circuit diagrams of various example interior components of a charging circuit **100** that may be included in a battery unit. The circuit receives power via a set of contacts **101** that are connected to the energy generating device via the power cable. A full bridge rectifier **103** converts the input alternating current (AC) to direct current (DC).

[0032] The voltage of the rectifier **103** output may not be sufficient to charge the energy storage unit, and it may be susceptible to power spikes during operation. To address this, a first regulating circuit **105** receives the rectifier output and regulates its voltage to a level corresponding to that of the energy storage device's rated input voltage. The regulating circuit **105** may increase the voltage from the rectifier when necessary, reduces voltage during spikes, or both. In some embodiments, the first regulating circuit may be a buck-boost converter. For example, when used with certain lithium polymer (LiPo) batteries, a buck-boost converter **105** may yield a regulated output voltage in a range of approximately 3.7 volts to approximately 4.2 volts. Other voltage ratings and ranges are possible, typically depending on the rating of the battery that is used with the system.

[0033] During a charging operation, the output of the first regulating circuit leads to a charging circuit **111** that may be programmed to regulate the delivery of current to the battery **131**. When the charging circuit **111**, which as shown is an integrated circuit such as those known now or in the future to persons of skill in the art, detects that the battery unit voltage is less than a threshold level, it may reduce the charging current delivered to the battery **131**,

and it may increase the current when the voltage rises to at least the threshold. These thresholds may be set by one or more external resistors. When the charging circuit **111** detects that the battery **131** is fully charged or within a threshold amount of being fully charged, the it charging circuit **111** may switch to an end of charge condition and reduce or stop delivering charge to the battery unit. The charging circuit **111** also may include outputs for interfacing with LEDs or other indicators that provide a visual indicator when the device is charging a battery.

[0034] A battery indicator **113** is connected between a positive terminal of the battery **131** and ground, and is a circuit that is configured to detect a level of charge in the battery. The battery indicator may include a set of LEDs or other indicators **115** that selectively illuminate to illustrate a level of charge in the battery. The higher the charge in the battery **131**, the higher the number of LEDs **115** that will illuminate.

[0035] In some embodiments, an output of the battery indicator **113** may be connected to a transmitter **118** that transmits a signal that includes data, or which has a magnitude or frequency, corresponding to a level of charge in the battery. The transmitter **118** may be configured to transmit signals using a short-range communication protocol so that its signals can be detected by a nearby mobile electronic device **150**. Examples of such protocols include Bluetooth, Bluetooth Low Energy, RFID, ANT, ANT+, and other near-field communication protocols. The transmitter **118** also may be paired with a microprocessor that converts the signals output by the battery indicator into data that the transmitter will transmit, or which includes programming that performs other function.

[0036] The mobile electronic device **150** may include a processor and a computer-readable storage medium with programming instructions that, when executed, cause the processor to run an application that receives the signals from the transmitter **118**, use the signals to measure a level of charge in the battery, and output an indicator of a level of charge

on a display of the mobile electronic device. The level indicator may include a fuel gauge, a numeric indicator, or another graphic indicator of a level of charge in the battery. Optionally, the color, size or other visual characteristics of the graphic indicator may change when the level of charge exceeds a threshold (such as at least 99% charged) or goes below a threshold (such as less than 50% charge remaining in the battery). The application also may store the received data over time and calculate a function of changes in energy level over a time period, with the result being a measure of the amount of charge generated by the energy generating device over time. The application also cause this measure to be displayed on a display of the output of the mobile electronic device so that when a person using such a mobile electronic device also uses the energy generating device, the application can provide the user a visual indicator showing how much charge that the user has generated over a period of time. The application also provide a user interface via which the user may select, and the application may receive, various time periods, or various time range magnitudes, so that the user can command the application to calculate and display a measure of the amount of power generated over the various time periods or ranges.

[0037] During a discharging operation, power from the battery **131** may pass through a second regulating circuit **121** that regulates the voltage of the level that is required for a load **135**, such as a mobile electronic device or device battery that is being charged. In some embodiments, the second regulating circuit **121** may include a boost circuit that regulates a charge to remain above a threshold level, a buck circuit that regulates a charge to remain below a threshold level, or a buck/boost converter that regulates a charge to remain within an upper and a lower threshold. The load **135** may be connected to the battery unit via an electrical connector such as a Universal Serial Bus (USB), mini-USB, micro-USB, Lightning or other connector. The circuit also may include a shock overcurrent and electrostatic

discharge protection circuit **123**, such as a variable resistor in combination with a filter as shown, to provide an additional level of protection during extreme electrical events.

[0038] The above-disclosed features and functions, as well as alternatives, may be combined into many other different systems or applications. Various presently unforeseen or unanticipated alternatives, modifications, variations or improvements may be made by those skilled in the art, each of which is also intended to be encompassed by the disclosed embodiments.

CLAIMS

1. An energy generation and storage system, comprising:

an energy generation device within a component of a shoe; and

an energy storage device comprising an attachment structure configured to removably secure the energy storage device and electrically connect to the energy generation device via a power cord.

2. The system of claim 1, wherein the energy storage device comprises:

a battery unit having at least one power port; and

a holster comprising a cavity that holds the battery unit and a plurality of fastening structures configured to secure the holster to a shoelace of the shoe.

3. The system of claim 2, wherein a first one of the fastening structures comprises a flap that, when installed, is threaded around at least one rung of the shoelace and at least partially covers an opening that receives the battery into the cavity.

4. The system of claim 3, wherein a second one of the fastening structures comprises a receiving channel that, when installed, receives a portion of the shoelace that is proximate an ankle area of the shoe.

5. The system of claim 1, wherein:

the component of the shoe comprises an insole that includes a port positioned along a side of the insole in an arch area of the insole; and

the power cord extends from the port.

6. The system of claim 2, wherein the battery unit comprises a plurality of lights configured to selectively illuminate based on a level of charge of the battery unit.

7. The system of claim 3, wherein the flap comprises a shoelace-engaging portion and a fastening portion, wherein the shoelace-engaging portion is wider than the fastening portion.

8. The system of claim 3, wherein the holster further comprises a buckle sized and positioned to receive the fastening portion.

9. The system of claim 2, wherein the battery unit comprises:

a rectifier;

a first regulating circuit;

a battery indicator circuit; and

a second regulating circuit.

10. The system of claim 2, wherein the battery unit also comprises a transmitter connected to an output of the battery indicator circuit, wherein the transmitter is configured to transmit a signal that contains an indicator of a level of charge in the battery unit.

11. The system of claim 10, further comprising programming instructions that, when executed, cause a mobile electronic device that is within a communication range of the transmitter to:

receive the signal that contains an indicator of a level of charge in the battery unit; and

output, on a display of the mobile electronic device, a graphic indication of the level of charge.

12. The system of claim 11, further comprising additional programming instructions that, when executed, cause the mobile electronic device to:

identify a time period;

determine a measure of an amount of energy generated by the energy generation device during the time period; and

output, on the display, a graphic indication of the amount of energy generated during the time period.

13. The system of claim 1, wherein the shoe comprises a prosthetic foot.

14. An energy generation and storage system, comprising:

an energy generation device formed as a component of a shoe; and

an energy storage device comprising an attachment structure configured to removably secure the energy storage device and electrically connect to the energy generation device via a power cord, wherein the energy storage device comprises:

a battery unit having at least one power port, and

a holster comprising a cavity that holds the battery unit and a first fastening structure comprising a flap that, when installed, is threaded around at least one rung of a shoelace of the shoe and at least partially covers an opening that receives the battery into the cavity.

15. The system of claim 14, wherein the holster also comprises a receiving channel that, when installed, receives a portion of the shoelace that is proximate an ankle area of the shoe.

16. The system of claim 14, wherein:

the component of the shoe comprises an insole that includes a port positioned along a side of the insole in an arch area of the insole; and

the power cord extends from the port.

17. The system of claim 14, wherein the battery unit comprises a plurality of lights configured to selectively illuminate based on a level of charge of the battery unit.

18. The system of claim 14, wherein the flap comprises a shoelace-engaging portion and a fastening portion, wherein the shoelace-engaging portion is wider than the fastening portion.

19. The system of claim 18, wherein the holster further comprises a buckle sized and positioned to receive the fastening portion.

20. The system of claim 14, wherein the battery unit comprises:

a rectifier;

a first regulating circuit;

a battery indicator circuit; and

a second regulating circuit.

21. The system of claim 14, wherein the battery unit also comprises a transmitter connected to an output of the battery indicator circuit, wherein the transmitter is configured to transmit a signal that contains an indicator of a level of charge in the battery unit.

22. The system of claim 21, further comprising programming instructions that, when executed, cause a mobile electronic device that is within a communication range of the transmitter to:

receive the signal that contains an indicator of a level of charge in the battery unit; and

output, on a display of the mobile electronic device, a graphic indication of the level of charge.

23. The system of claim 21, further comprising additional programming instructions that, when executed, cause the mobile electronic device to:

identify a time period;

determine a measure of an amount of energy generated by the energy generation device during the time period; and

output, on the display, a graphic indication of the amount of energy generated during the time period.

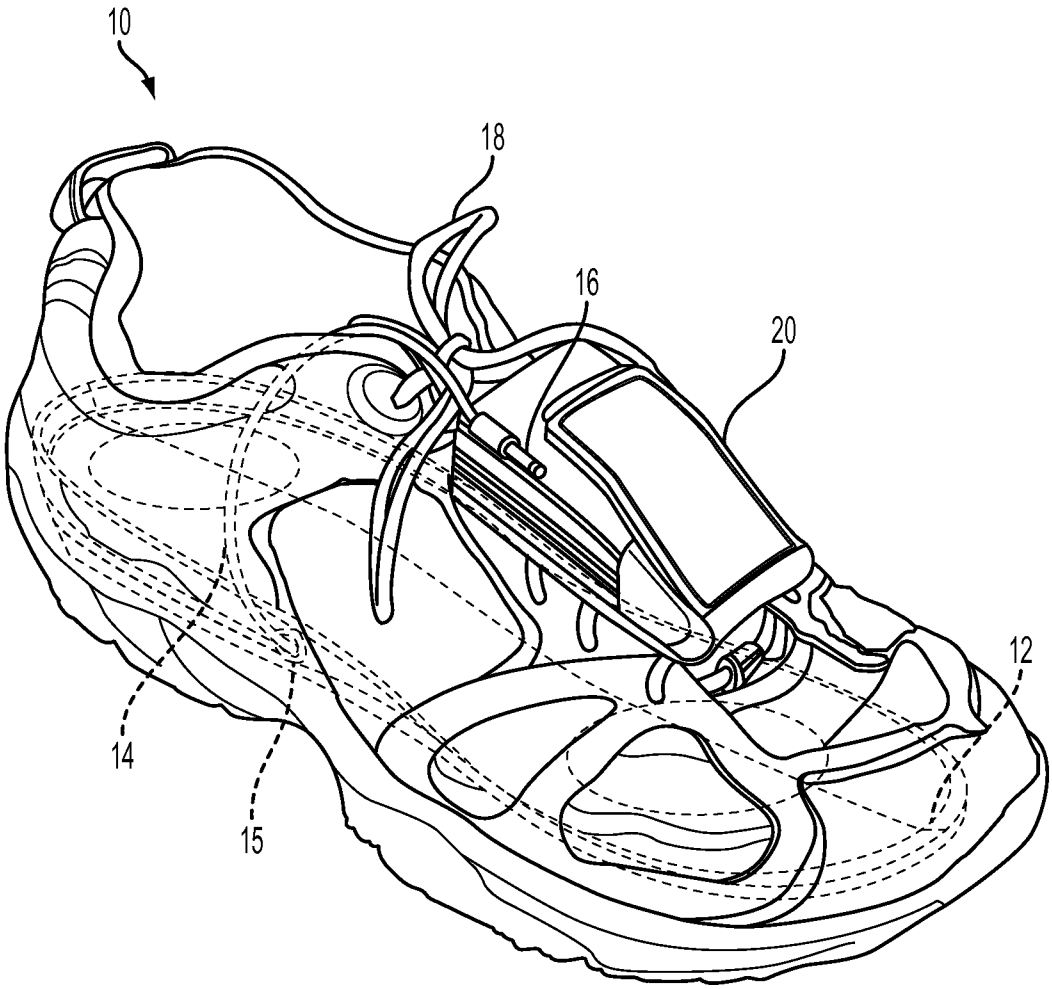

FIG. 1

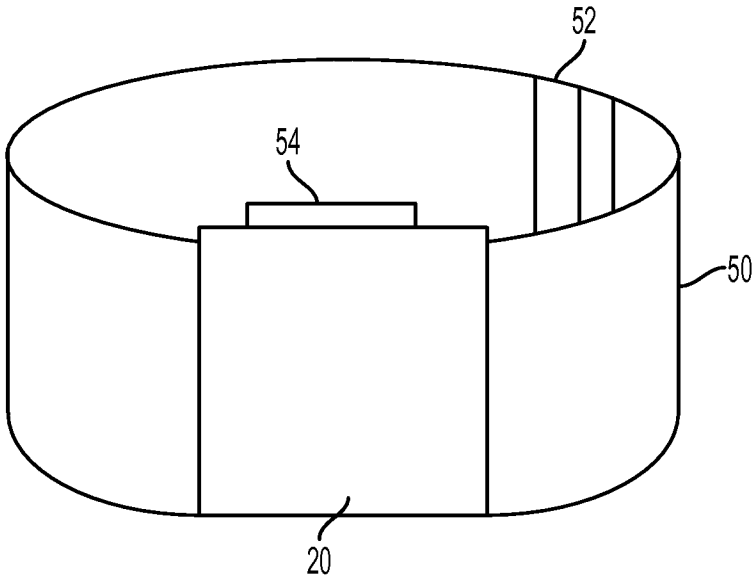

FIG. 2

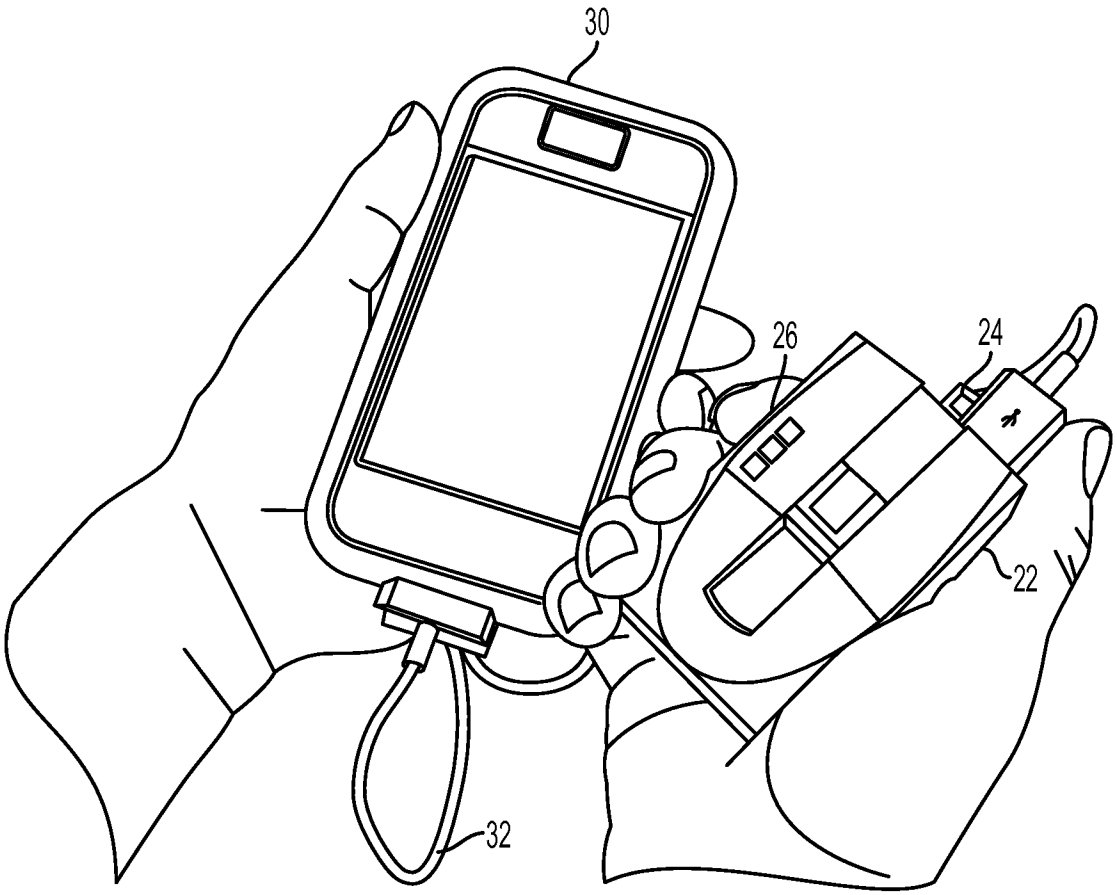

FIG. 3

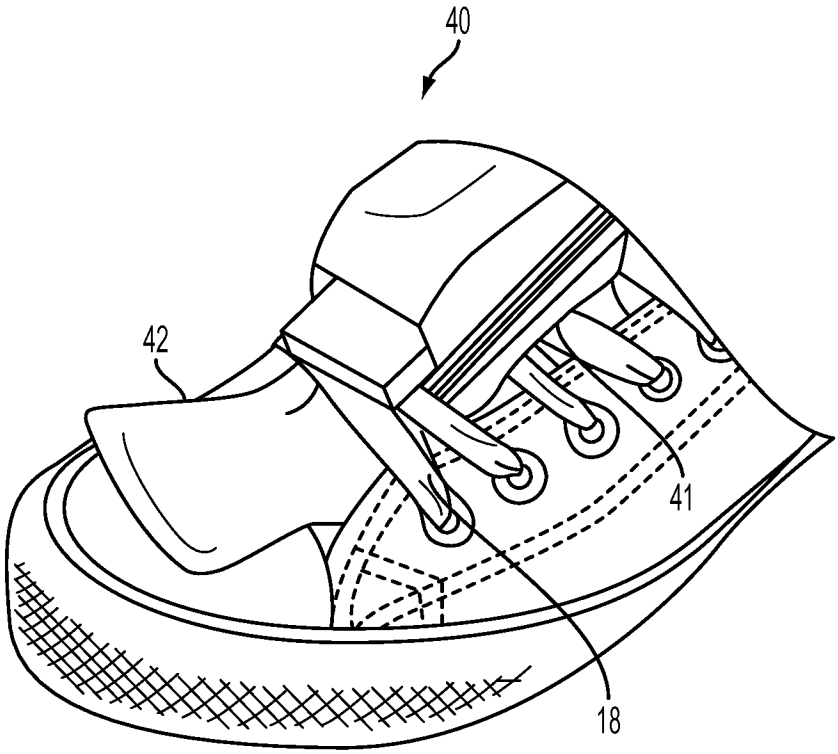

FIG. 4

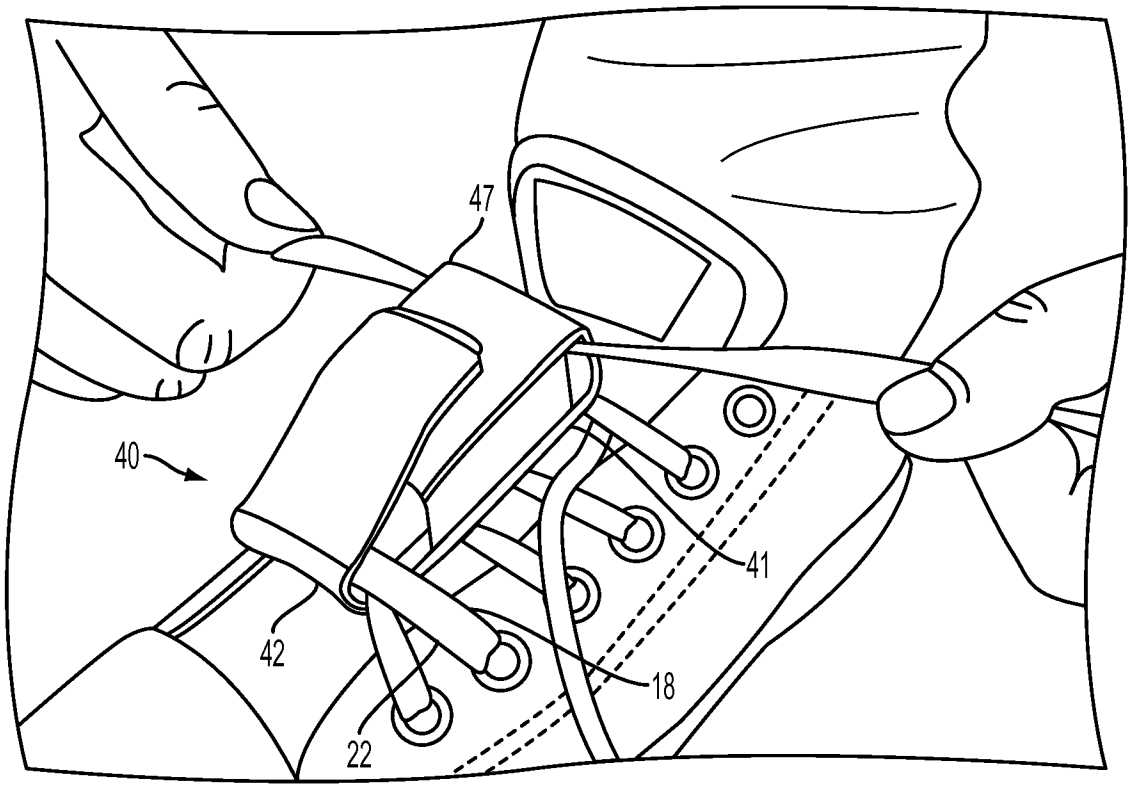

FIG. 5

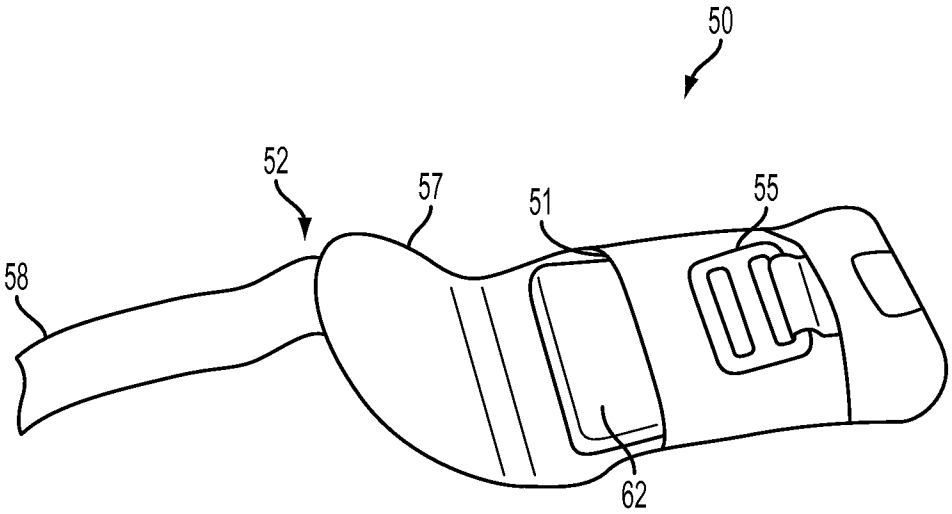

FIG. 6A

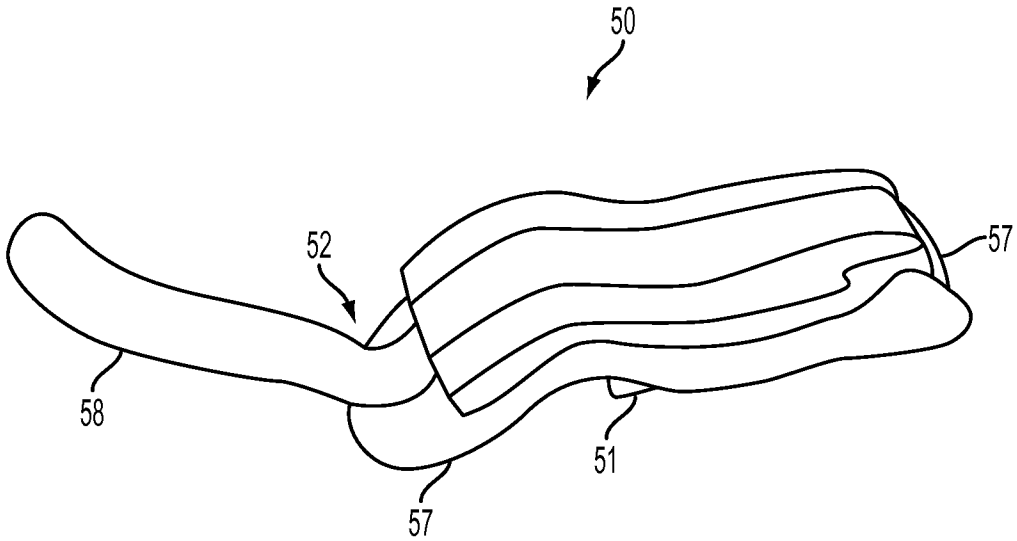

FIG. 6B

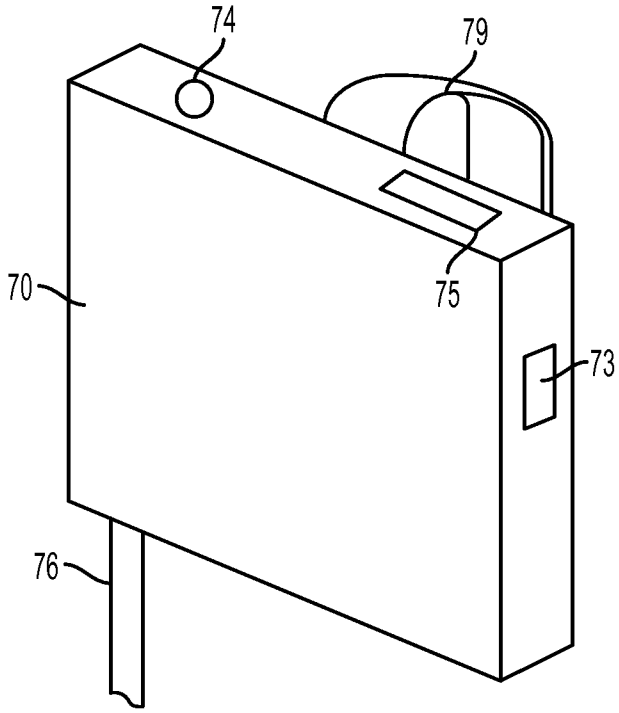

FIG. 7

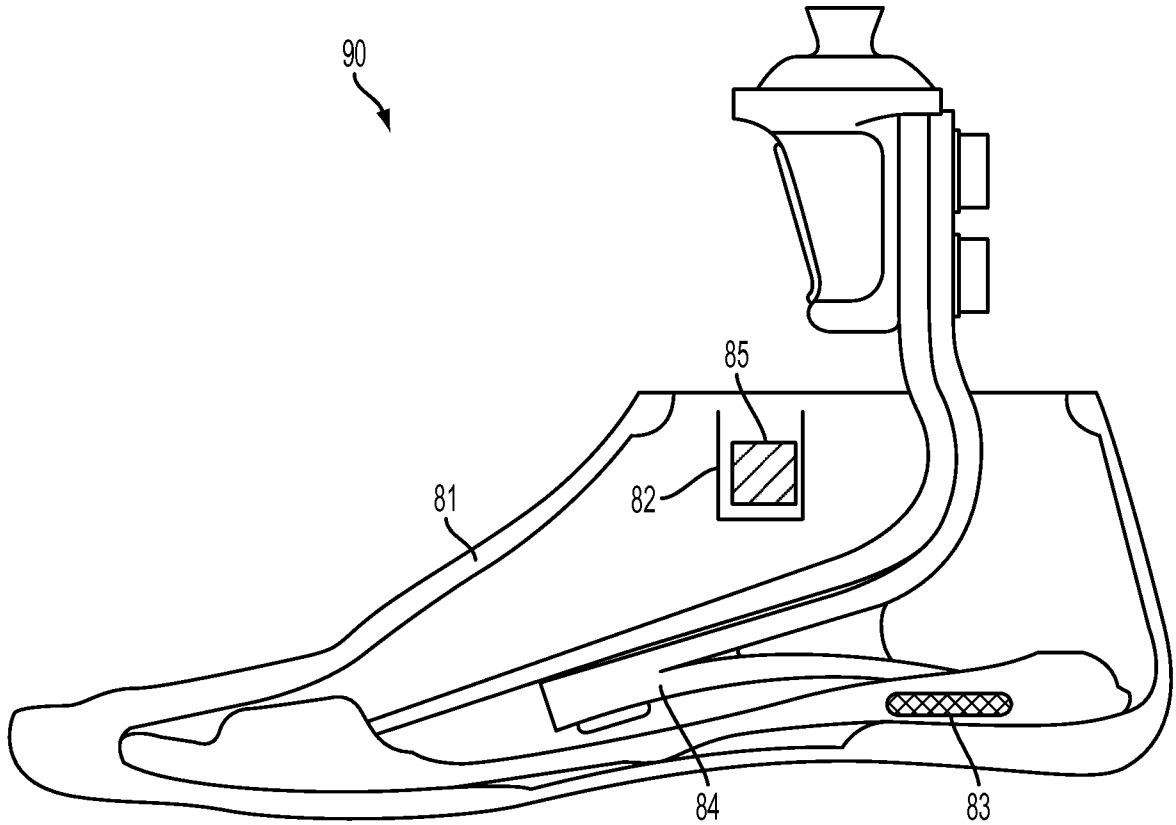

FIG. 8

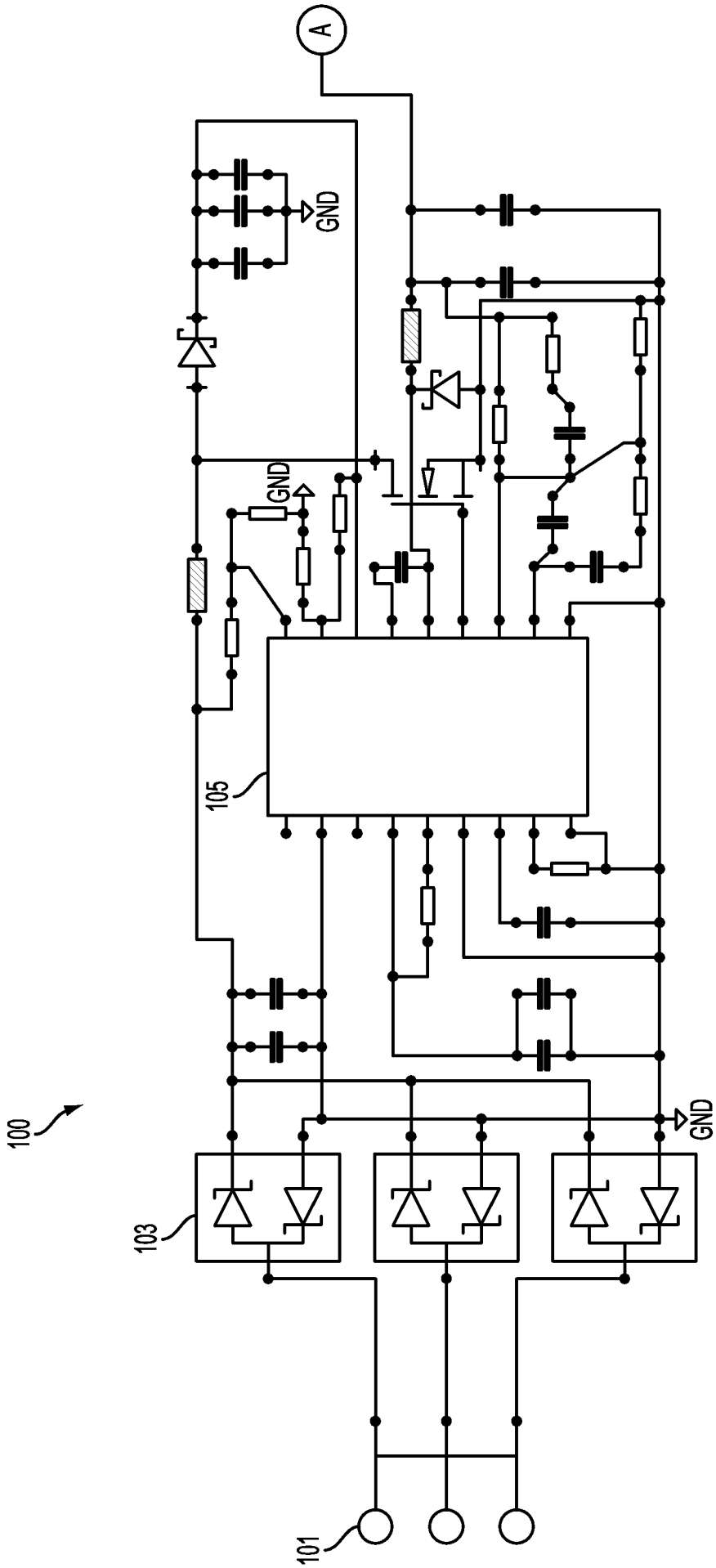

FIG. 9

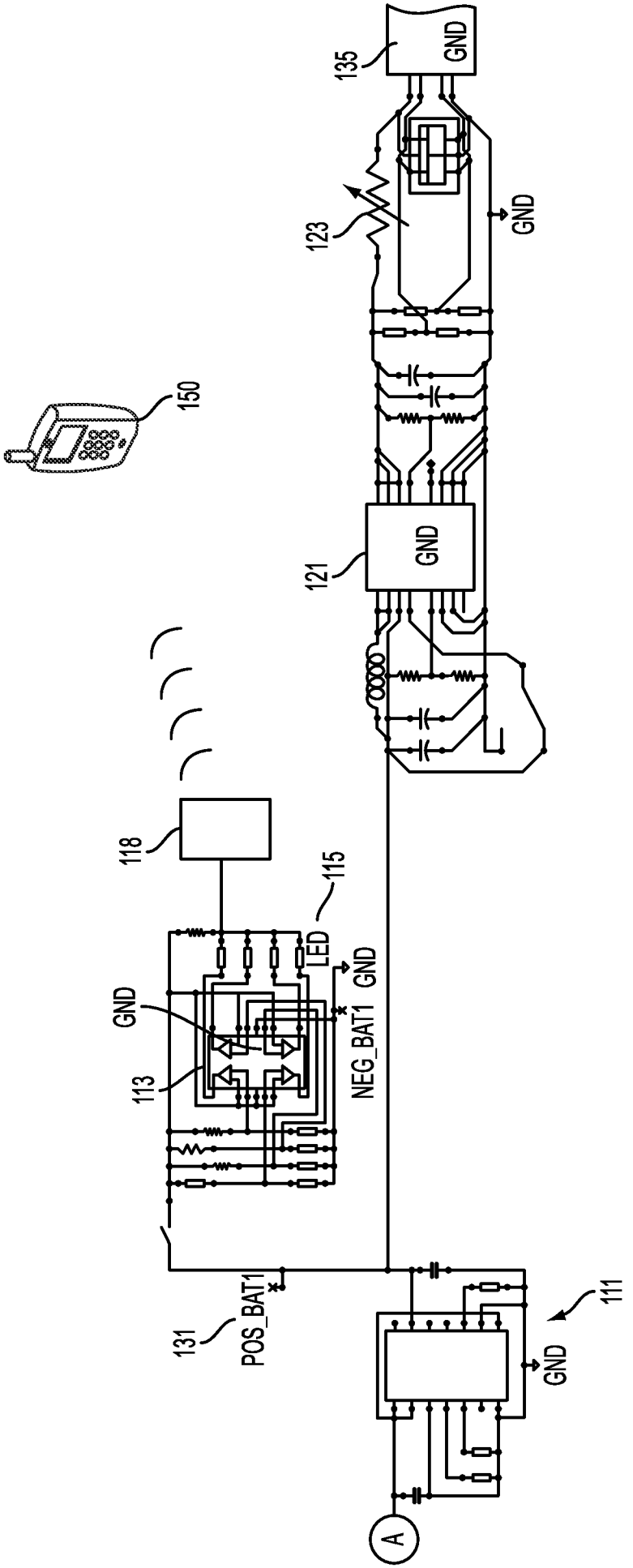
135
GND
123
GND
150
121
GND
118
115
LED
GND
GND
113
NEG_BAT1
131
POS_BAT1
111
GND
A

FIG. 10

INTERNATIONAL SEARCH REPORT

International application No.
PCT/US2014/042308

A. CLASSIFICATION OF SUBJECT MATTER

H02J 7/32(2006.01)i

According to International Patent Classification (IPC) or to both national classification and IPC

B. FIELDS SEARCHED

Minimum documentation searched (classification system followed by classification symbols)
H02J 7/32; A61F 2/74; G01S 1/02; H02K 7/18; H02P 9/04; A61F 2/66

Documentation searched other than minimum documentation to the extent that such documents are included in the fields searched
Korean utility models and applications for utility models
Japanese utility models and applications for utility models

Electronic data base consulted during the international search (name of data base and, where practicable, search terms used)
eKOMPASS(KIPO internal) & Keywords: power, shoe, sandal, boots, charge, shoelace, shoestring, power, prosthetic, insole

C. DOCUMENTS CONSIDERED TO BE RELEVANT

Category*	Citation of document, with indication, where appropriate, of the relevant passages	Relevant to claim No.
X	JP 2009-044945 A (KAKU MATSU) 26 February 2009 See abstract, paragraphs [0016]-[0025] and figures 1-2.	1
Y		5,13
A		2-4,6-12,14-23
Y	CN 2810261 Y (WANG DEQU) 30 August 2006 See abstract, claim 1 and figure 1.	5
A		1-4,6-23
Y	US 2003-0120353 A1 (ROLAND J. CHRISTENSEN) 26 June 2003 See abstract, paragraphs [0053]-[0054] and figure 7.	13
A		1-12,14-23
A	KR 10-2000-0058665 A (TAE KYUNG LEE) 05 October 2000 See abstract, claims 1-4 and figures 1-2.	1-23
A	US 7327046 B2 (ALEXANDER BENJAMIN BIAMONTE) 05 February 2008 See abstract, column 2, line 33-column 4, line 9 and figures 1-3.	1-23

☐ Further documents are listed in the continuation of Box C. ☒ See patent family annex.

* Special categories of cited documents:
"A" document defining the general state of the art which is not considered to be of particular relevance
"E" earlier application or patent but published on or after the international filing date
"L" document which may throw doubts on priority claim(s) or which is cited to establish the publication date of another citation or other special reason (as specified)
"O" document referring to an oral disclosure, use, exhibition or other means
"P" document published prior to the international filing date but later than the priority date claimed
"T" later document published after the international filing date or priority date and not in conflict with the application but cited to understand the principle or theory underlying the invention
"X" document of particular relevance; the claimed invention cannot be considered novel or cannot be considered to involve an inventive step when the document is taken alone
"Y" document of particular relevance; the claimed invention cannot be considered to involve an inventive step when the document is combined with one or more other such documents,such combination being obvious to a person skilled in the art
"&" document member of the same patent family

Date of the actual completion of the international search	Date of mailing of the international search report
13 October 2014 (13.10.2014)	**13 October 2014 (13.10.2014)**

Name and mailing address of the ISA/KR
International Application Division
Korean Intellectual Property Office
189 Cheongsa-ro, Seo-gu, Daejeon Metropolitan City, 302-701,
Republic of Korea
Facsimile No. +82-42-472-7140

Authorized officer
PARK, Hye Lyun
Telephone No. +82-42-481-3463

INTERNATIONAL SEARCH REPORT

Information on patent family members

International application No.
PCT/US2014/042308

Patent document cited in search report	Publication date	Patent family member(s)	Publication date
JP 2009-044945 A	26/02/2009	None	
CN 2810261 Y	30/08/2006	None	
US 2003-0120353 A1	26/06/2003	AU 2001-71778 A1	14/01/2002
		AU 2003-232020 A1	17/11/2003
		AU 2003-232020 A8	17/11/2003
		AU 2006-232485 A1	12/10/2006
		EP 1487378 A2	22/12/2004
		US 2002-0133237 A1	19/09/2002
		US 2003-0216815 A1	20/11/2003
		US 2004-0133284 A1	08/07/2004
		US 2005-0171618 A1	04/08/2005
		US 2005-0216098 A1	29/09/2005
		US 2006-0229736 A1	12/10/2006
		US 2006-0241783 A1	26/10/2006
		US 2008-0183301 A1	31/07/2008
		US 6663673 B2	16/12/2003
		US 6702858 B2	09/03/2004
		US 6875241 B2	05/04/2005
		US 6875242 B2	05/04/2005
		US 7341603 B2	11/03/2008
		US 7572299 B2	11/08/2009
		US 7686848 B2	30/03/2010
		WO 2002-002034 A1	10/01/2002
		WO 2003-092543 A2	13/11/2003
		WO 2003-092543 A3	04/03/2004
		WO 2004-071225 A2	26/08/2004
		WO 2004-071225 A3	28/10/2004
		WO 2006-099580 A2	21/09/2006
		WO 2006-099580 A3	07/05/2009
		WO 2006-108166 A2	12/10/2006
		WO 2006-108166 A3	15/02/2007
KR 10-2000-0058665 A	05/10/2000	KR 10-0515517 B1	20/09/2005
US 7327046 B2	05/02/2008	US 2007-145746 A1	28/06/2007