(No Model.) 2 Sheets—Sheet 1.

A. D. NEWBERRY & W. J. MELVIN.

MACHINE FOR SECURING LOCKING PLATES AND PINS IN BED RAILS AND POSTS.

No. 579,836. Patented Mar. 30, 1897.

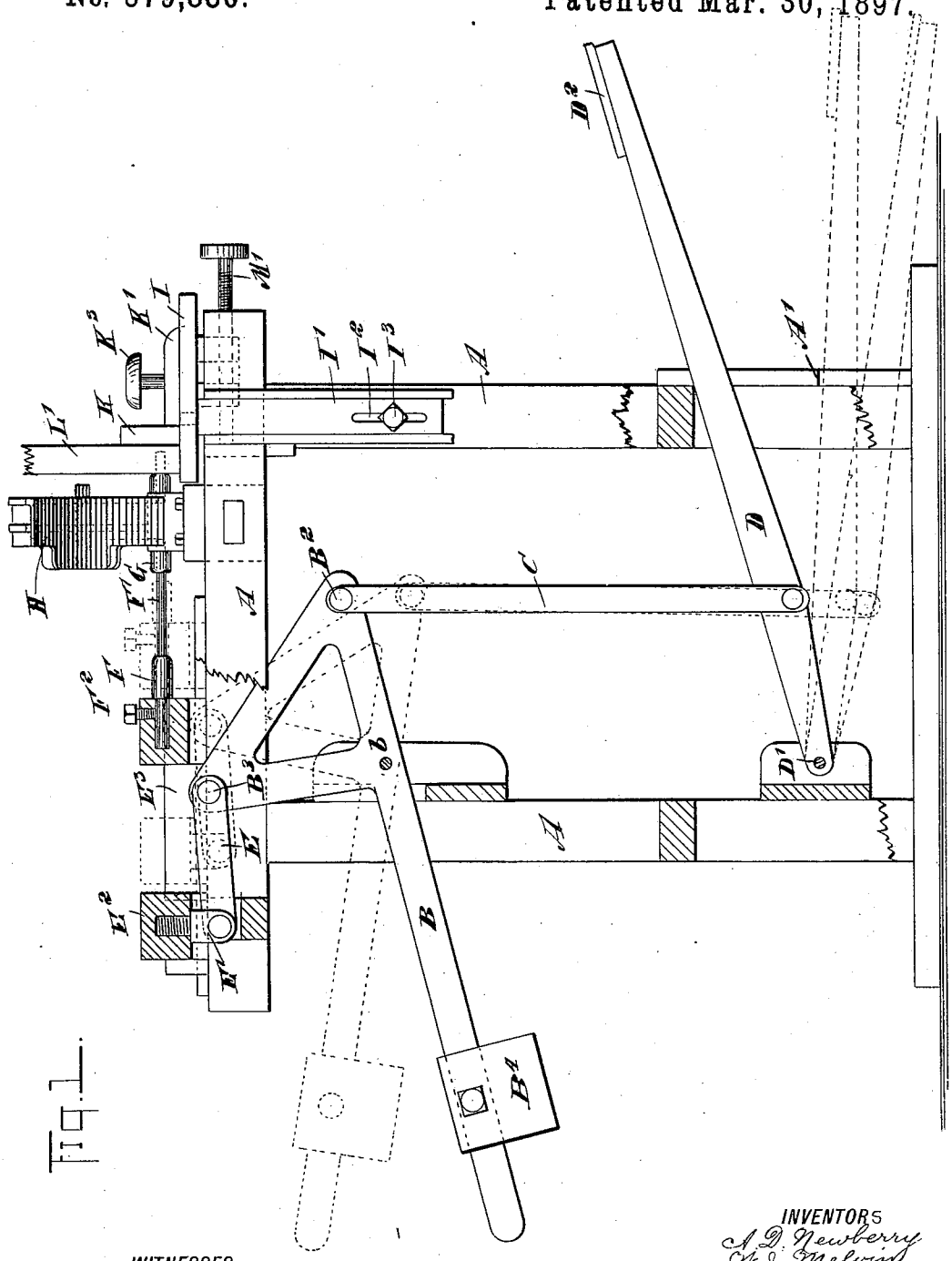

Fig. 1.

WITNESSES:
H. Hellyer.
H. L. Reynolds.

INVENTORS
A. D. Newberry
W. J. Melvin
BY
ATTORNEYS.

THE NORRIS PETERS CO., PHOTO-LITHO., WASHINGTON, D. C.

(No Model.) 2 Sheets—Sheet 2.

A. D. NEWBERRY & W. J. MELVIN.

MACHINE FOR SECURING LOCKING PLATES AND PINS IN BED RAILS AND POSTS.

No. 579,836. Patented Mar. 30, 1897.

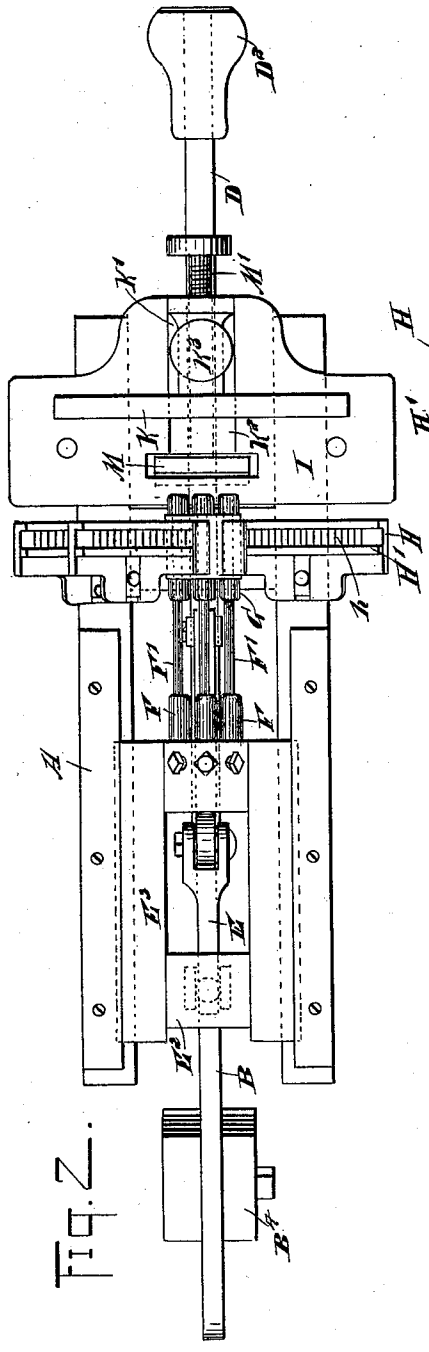

Fig. 2.

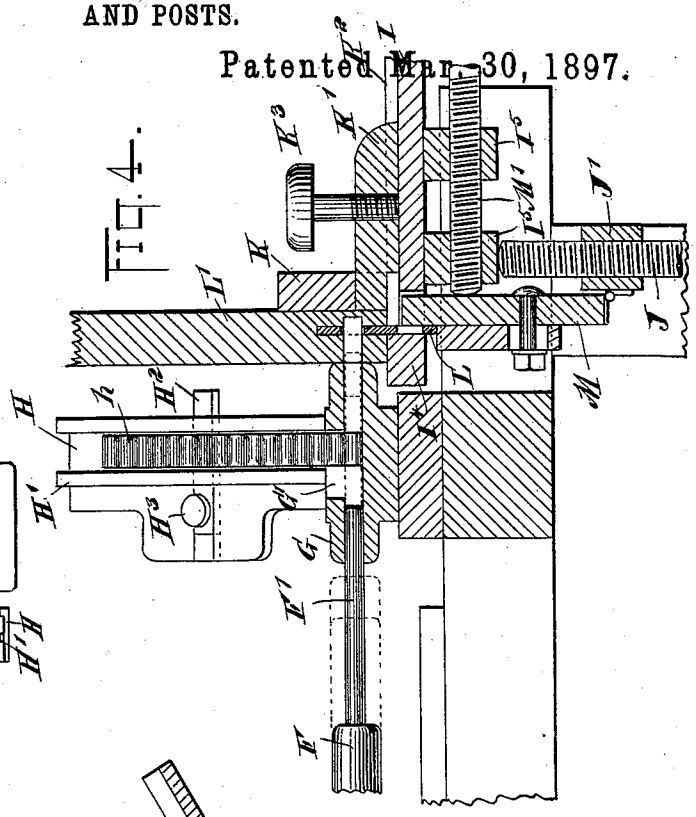

Fig. 4.

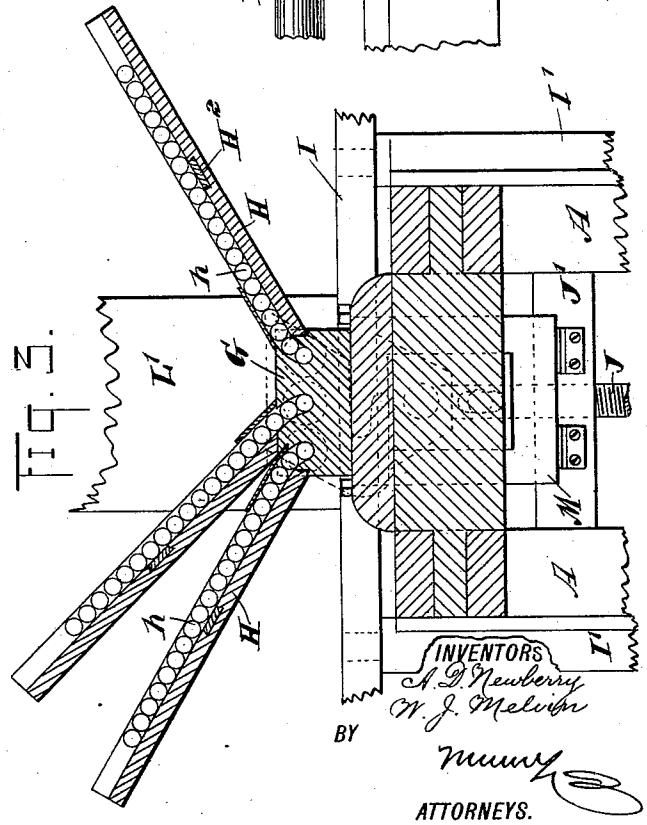

Fig. 3.

WITNESSES:
H. Kellyer.
H. L. Reynolds.

INVENTORS
A. D. Newberry
W. J. Melvin
BY
Munn & Co
ATTORNEYS.

THE NORRIS PETERS CO., PHOTO-LITHO., WASHINGTON, D. C.

UNITED STATES PATENT OFFICE.

AGUSTUS D. NEWBERRY AND WILLIAM J. MELVIN, OF FAYETTEVILLE, NORTH CAROLINA, ASSIGNORS TO THEMSELVES AND ALLIE L. NEWBERRY, OF SAME PLACE.

MACHINE FOR SECURING LOCKING PLATES AND PINS IN BED RAILS AND POSTS.

SPECIFICATION forming part of Letters Patent No. 579,836, dated March 30, 1897.

Application filed September 30, 1896. Serial No. 607,449. (No model.)

To all whom it may concern:

Be it known that we, AGUSTUS D. NEWBERRY and WILLIAM J. MELVIN, of Fayetteville, in the county of Cumberland and State of North Carolina, have invented a new and Improved Machine for Securing Locking Plates and Pins in Bed Rails and Posts, of which the following is a full, clear, and exact description.

Our invention relates to a new and improved machine for securing locking plates and pins to bed rails and posts.

It consists, essentially, of a slide operated by a foot-lever and carrying punches placed to register with the holes in the locking-plate, and also of feed-chutes adapted to receive the pins for securing said plates in place.

It also consists of certain mechanism for locking and holding the plates and rails in proper position for the work; also, in other details which will be clearly pointed out in the following specification.

Reference is to be had to the accompanying drawings, forming a part of this specification, in which similar characters of reference indicate corresponding parts in all the views.

Figure 1 is a side view, partially in section, showing our device. Fig. 2 is a plan view of the operating mechanism thereof. Fig. 3 is a cross-sectional view through the feed-chutes and including only the table and operating portions, and Fig. 4 is a longitudinal section through similar portions.

The object of our invention is to provide means by which the locking mechanism of a bedstead may be quickly secured in place thereon and to do the work more efficiently than can be done by hand.

A framework A of any suitable shape is provided for supporting and holding the mechanism. To this framework is pivoted a weighted lever B, which has its pivot at *b* and is connected at B^2 with a link or connecting-rod C, connected at its lower end to a foot-lever D, pivoted at D′ to the frame of the machine, the opposite end of this lever having at D^2 a plate for the foot of the operator of the machine.

The lever B at one end is triangular-shaped, forming a bell-crank, to which at B^3 is pivoted a short link E. This link E at its rear end is connected, by means of a stud E′, with a cross-bar E^2 of a slide E^3. This slide E^3 at its forward end carries a series of socket-pieces F, adapted to receive the punches F′. These are secured to the frame by set-screws F^2, which will securely hold them in position. The socket-pieces F may be dispensed with by having the holes in the cross-bar of the frame of such a size as to receive the punches and forming the sockets in the bar itself.

The forward ends of the punches F′ enter guides G. These guides have a central hole throughout their length in which the punches snugly fit. Upon the upper side there is a slot G′ connecting with the feed-chutes and through which the pins for securing the plates in position are fed. These feed-chutes H (shown in section in Fig. 3) consist of a trough placed at an angle and adapted to receive the pins. The pins *h* (shown in Figs. 3, 4, and 5) consist of round pins without any heads thereon. They are placed in the chutes, as shown most clearly in Fig. 3, the pins extending across the chute and resting one against the other. In this position they will roll down the chute as fast as the lower ones are taken away.

The chute H is made adjustable by having the side H′ adjustable upon the body of the chute. This is attached to a cross-slide H^2, which slides in a dovetail groove in the body of the chute. To this slide is secured a locking-screw H^3, operated by the hands and adapted to clamp the slide in any position desired. In this way the width of the chute may be adjusted to the length of the rivets or pins used.

The knee or table I, which is placed just in front of the chutes, is supported at each side of the machine by the adjustable bars I′. These bars I′ have a slot I^2, through which passes a bolt I^3, which permits of adjusting the table vertically. To secure a more accurate adjustment than is readily possible by this means, we have provided a second adjustment, consisting of a screw J, which works in a nut J′, attached to or formed as a

part of the frame A. This bears against the under side of the table I. In adjusting the elevation of this table I the screws I^3 are loosened, and the table may then be moved up by screwing upon the bolt J. This will force the table up to exactly the point desired. When this point is reached, the bolts I^3 may be tightened, thus securing the table in position. The lowering of the table may be accomplished in a similar way, the screw J being used to get an accurate adjustment.

Upon the upper surface of the table I is attached a cross-bar K. This is attached to a bottom member K', which slides in a dove-tail groove K^2, formed across the table I. This cross-bar K is adapted to be moved to or from the guides G to make room for the different thickness of the rails and posts to be used in this work. The cross-bar K is adapted to receive the thrust of the device in forcing the pins to place.

In Fig. 4 the locking-plate is shown at L and the rail to which it is to be secured at L'. Pivoted to the lug J', forming the nut for the screw J, is a block M. This block may swing slightly in a horizontal direction. Between the upper end of this block and the cross-bar I^4 of the table I is placed the locking-plate L. The punches F' are advanced by pressing down upon the lever D until they pass through the holes in the locking-plate. This assures the accurate placing of the plate. While held upon these punches, the swinging plate M is forced against the locking-screw M', which passes through the lugs I^5 upon the bottom of the plate I and bears against the surface of the plate M. This securely holds the locking-plate in position. The rail L', which has been previously slotted for the reception of the plate and bored for the reception of the pins, is then placed over the plate. The lever D is then brought to its extreme upper position. This withdraws the punches F' to the position shown in Fig. 4 and permits the pins in the chutes to drop in each guide. The foot-lever D is then forced down. This advances the punches F', carrying with each a locking-pin. This is forced into the hole previously prepared in the rail L' and through the holes in the locking-plate L. The lever D is then permitted to rise, but not to its full extent. It will be noticed that there is a notch A', formed in a plate attached to the frame of the machine and forming a guide for the said lever. This notch is adapted to receive the lever and prevent its further rise when the same is thrown to that side of the slot. This rise of the lever will permit the retraction of the punches F' sufficiently to entirely clear the bed-rail, but not so far as to permit the pins in the feed-chutes to drop. The object of this is to permit the advancing of the punches F for accurately centering the locking-plate when the same is inserted and without forcing out any of the pins. After the plate and rail have been thus centered and clamped the lever D is thrown out of the slot A' and permitted to rise in the position shown in full lines in Fig. 1. This retracts the punches to the position shown in full lines in Fig. 4 and permits the feed-chutes to fill the guides with locking-pins.

Our device may be used for inserting the locking-pins in the posts of the bedstead as well as inserting the pins for holding the locking-plate in position. In this case a single pin only is inserted, or two, if desired. For this work one or two of the punches shown in the drawings should be removed and one or two only used, as the case may be. The position of the table and also of the slide K would be adjusted differently from those shown in the drawings. The rail should be placed thereon in such a position that the hole may be brought to register with the punch being used. One or two of the chutes only should be supplied with pins and the pins fed forward and placed in the post in the same manner as heretofore described for locking the plate in the rail.

With this mechanism it is possible to accurately lock the pins in the rail and in the post, and the distance to which they will be forced into each can be accurately adjusted, and thus avoid trouble arising from forcing the pin too far and thus breaking out the wood from the opposite side of the plate or of not forcing the pin far enough and thus securing a poor hold upon the plate.

As indicated in Fig. 4, the hole in the rail for the reception of the pin is not bored entirely through. The same is true of the post which receives the pin adapted to engage with the projecting portion of the locking-plate to secure the rail to the post when setting the bedstead up.

The lever B is weighted by having a block B^4 placed upon one end thereof. This block is adjustable and intended to return the parts to the position shown in Fig. 1 and is adjustable upon the lever also, that the force thereof may be made whatever desired.

With our device it is possible to do much better work than can be done by hand and also much more rapid work. The operator can be certain of having the locking-pins accurately placed and without any danger of injuring the wood portions of the bedstead.

Having thus described our invention, we claim as new and desire to secure by Letters Patent—

1. In a device for inserting locking-pins, the combination of feed-chutes, punches reciprocating across the same, and means for locking the punches intermediate the limits of their stroke and before they have been withdrawn sufficiently to clear the pins, substantially as described.

2. In a device for securing rail-fastening devices in bedsteads, the combination of suit-

able holding devices for the rail and fastening-plate, chutes for delivering the securing-pins, punches and means for reciprocating them, comprising a lever, guides for said punches connected to the chutes, and a locking device adapted to hold said lever at a point intermediate the limits of its reciprocation which will withdraw the punches from the bed-rail but will not clear the feed-chutes, substantially as described.

AGUSTUS D. NEWBERRY.
WILLIAM J. MELVIN.

Witnesses:
W. B. MALLEY,
W. H. NEWBERRY, Jr.