Feb. 12, 1924. 1,483,399

F. G. WHITTINGTON

DASH SWITCH

Filed Sept. 5, 1922

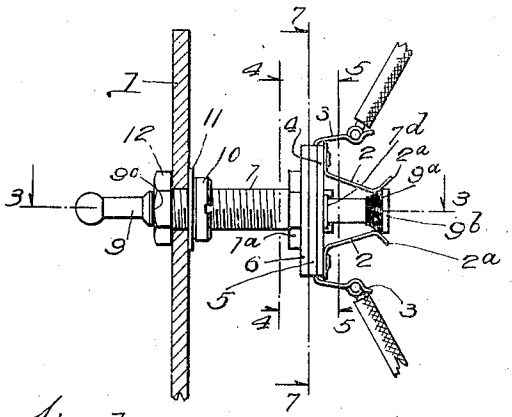

Fig. 1.

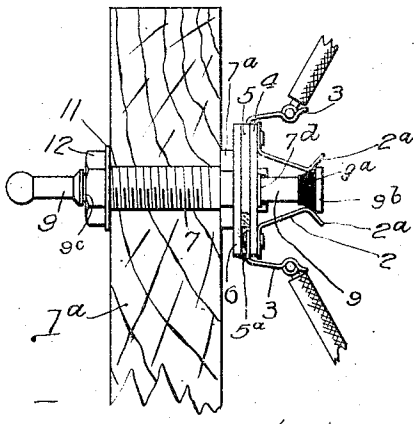

Fig. 2.

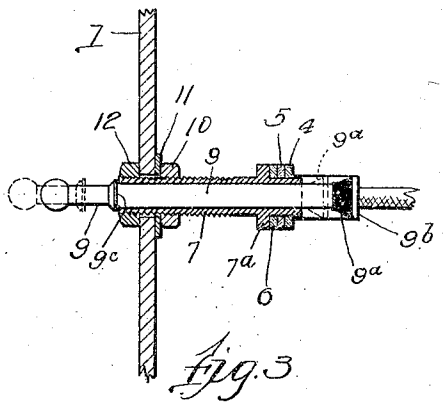

Fig. 3.

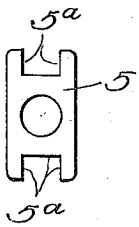

Fig. 7.

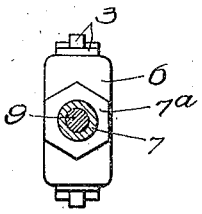

Fig. 4.

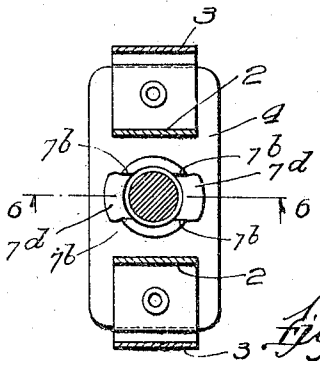

Fig. 5.

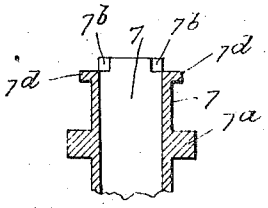

Fig. 6.

Witness:

Inventor:
Frederick G. Whittington,
by Burton & Burton
his Attys

Patented Feb. 12, 1924. 1,483,399

UNITED STATES PATENT OFFICE.

FREDERIK G. WHITTINGTON, OF EVANSTON, ILLINOIS, ASSIGNOR TO STEWART-WARNER SPEEDOMETER CORPORATION, OF CHICAGO, ILLINOIS, A CORPORATION OF VIRGINIA.

DASH SWITCH.

Application filed September 5, 1922. Serial No. 586,079.

To all whom it may concern:

Be it known that I, FREDERIK G. WHITTINGTON, a citizen of the United States, residing in Evanston, in the county of Cook and the State of Illinois, have invented certain new and useful Improvements in Dash Switches, of which the following is a specification, reference being had to the accompanying drawings, forming a part thereof.

The purpose of this invention is to provide an improved construction of electric switch particularly with its adaption for mounting upon an instrument board or the like of an automobile. It consists in the elements and features of construction shown and described as indicated in the claims.

In the drawings:—

Figure 1 is a section through a metal instrument board of relatively small thickness as shown, which is equipped with the device embodying this invention the same being shown in side elevation.

Figure 2 is a similar view showing the same device in side elevation mounted on a wooden instrument board of correspondingly greater thickness than the metal board shown in Figure 1.

Figure 3 is a section at the line 3—3 on Figure 1.

Figure 4 is a section at the line 4—4 on Figure 1.

Figure 5 is a section on an enlarged scale at the line 5—5 on Figure 1.

Figure 6 is a detail section at the line 6—6 on Figure 5.

Figure 7 is a section at the line 7—7 on Figure 1 showing in plan view the middle one of the three insulating layers.

In the drawings, 1 represents a metal instrument or dash board upon which the switch embodying this invention is mounted. 1^a shows a wooden instrument board with the same switch device mounted thereon. The switch itself comprises two opposed and spaced apart contacts, 2, 2, which with their respectively co-operating wire attachment pieces, 3, 3, are secured to an insulating support, 4, consisting of a layer of fibre or like suitable material to the opposed sides of which the contacts, 2 and 3, are secured by rivets extending through said insulating member, 4. An additional insulating layer, 5, below the layer, 4, has its ends notched at 5^a to accommodate the riveted ends of the wire-attached pieces, 3; and a third layer, 6, serves further to insure insulation of said wire-attachment pieces by covering their ends which are lodged in the notches, 5^a. Through all three of the insulating layers, 4, 5 and 6, there is inserted a sleeve, 7, having at a short distance back from the inserted end a hexagonal flange, 7^a, formed integrally with the sleeve for stopping the insulating layers and affording means for holding the sleeve against rotation in screwing on the nuts by which it is clamped to the board as hereinafter described. At the end which is inserted through the insulating layers the sleeve may be given four short slits, 7^b, to facilitate clinching down the end of the sleeve onto the outermost layer, 4, to hold the assembly tightly against the flange, 7^a. This clinching has to be done after all the parts of the switch hereinafter described are in place, at which stage access for clinching cannot be obtained except at the two opposed sides; and the slitting described defines two lugs, 7^a, at opposite sides which will be accessible for clinching them down when the device is fully assembled as shown in Figures 1 and 2.

In the sleeve there is mounted for reciprocation a plunger, 9, having at its end which stands between the contacts, 2, 2, a knob or head, 9^a, of insulating material which is encompassed at the end by a metal ring, 9^b, for making contact with the contacts, 2, 2; at or back of the point of nearest approach of these contacts, which are mounted inclined toward each other as seen in Figures 2 and 3, and have their ends reflexed outward as seen in said figures at 2^a so as to form angles at the point of nearest approach with the reflexed ends converging for facilitating the entrance of the head between said flexed ends for spreading the contacts, 2, 2, to admit the head back of said angles. The parts are dimensioned so that when the knob, 9^a, is retracted against the end of the sleeve, 7, the metal ring, 9^b, is in contact with the contact pieces, 2, 2, back of their angles or points of nearest approach and the circuit is closed; and when the plunger is thrust in toward the sleeve until its shoulder, 9^c, encounters the inner end of the latter, the insulating head, 9^a, of the plunger occupies a position between the angles or points of nearest ap-

proach of the contacts, 2, 2, as shown in dotted line in Figure 3 and the circuit is thereby open.

For mounting this device upon a thin metal plate a nut, 10, is run onto the threaded sleeve followed by a washer, 11, and the protruding threaded end of the sleeve is then inserted through the plate followed by a clamping nut, 12, which may be set tight for holding the device securely. When the device is to be mounted upon a wooden or other correspondingly thick board, as in Figure 2, the nut, 10, is dispensed with, the washer, 11, is applied outside the board on the nut 12, and said nut then clamps the board tightly against the integral hexagonal flange 7ª.

I claim:—

1. An electric switch for mounting on an instrument board and the like, comprising in combination with two contacts which are to be electrically connected, a reciprocable plunger and means carried thereon for connecting and disconnecting the contacts at the respective limits of the reciprocation of the plunger; an insulated mount for the contacts; a sleeve upon which the said insulated mount is fixedly mounted and in which the plunger is mounted for reciprocation, said sleeve having a stop shoulder for stopping it against the under or back side of the board and being extended from said stop shoulder at the opposite side of the insulation from that at which the contacts are mounted thereon, and being threaded outwardly from said stop shoulder for screwing through the board, the plunger being extended through the sleeve for manual access at one end and for carrying at the other end the contact-connecting-and-disconnecting means.

2. An electrical switch for mounting on an instrument board and the like, comprising in combination with two contacts which are to be electrically connected; a reciprocable plunger and means carried thereon for connecting and disconnecting the contacts at the respective limits of reciprocation of the plunger; an insulating mount for the contacts; a sleeve to which the contacts are rigidly secured, said sleeve having a stop shoulder at the side of the insulation opposite from that at which the contacts are mounted, and being extended from said shoulder for insertion through the instrument board, the plunger being extended out through said sleeve for manual access at the outer end and for carrying at the other end the contact connecting and disconnecting means, and stops on the sleeve adjustable longitudinally thereof for engaging the instrument board between them.

In testimony whereof, I have hereunto set my hand at Chicago, Illinois, this 31 day of August, 1922.

FREDERIK G. WHITTINGTON.