**PCT** WORLD INTELLECTUAL PROPERTY ORGANIZATION
International Bureau

INTERNATIONAL APPLICATION PUBLISHED UNDER THE PATENT COOPERATION TREATY (PCT)

| (51) International Patent Classification 5 : | | (11) International Publication Number: | WO 92/17376 |
|---|---|---|---|
| B65D 17/00 | A1 | (43) International Publication Date: | 15 October 1992 (15.10.92) |

(21) International Application Number: PCT/GB92/00623

(22) International Filing Date: 7 April 1992 (07.04.92)

(30) Priority data:

| | | |
|---|---|---|
| 9107387.4 | 8 April 1991 (08.04.91) | GB |
| 9206858.4 | 27 March 1992 (27.03.92) | GB |

(71) Applicant *(for all designated States except US)*: PARKES, Judith, Margaret [GB/GB]; White Cottage, Rasen Road, Tealby, Lincolnshire LN8 3XL (GB).

(71)(72) Applicants and Inventors: SEARLE, Matthew, John [GB/GB]; 63 Leyland House, Hale Street, London E14 0BU (GB). TAFT, Carden, Harper [US/GB]; 42 Belsize Park Gardens, Flat 8, London NW3 4LY (GB).

(72) Inventor; and
(75) Inventor/Applicant *(for US only)* : PARKES, Simon [GB/GB]; 42 Belsize Park Gardens, Flat 8, London NW3 4LY (GB).

(74) Agent: NEEDLE, Jacqueline; W.H. Beck, Greener & Co, 7 Stone Buildings, Lincoln's Inn, London WC2A 3SZ (GB).

(81) Designated States: AT, AT (European patent), AU, BB, BE (European patent), BF (OAPI patent), BG, BJ (OAPI patent), BR, CA, CF (OAPI patent), CG (OAPI patent), CH, CH (European patent), CI (OAPI patent), CM (OAPI patent), CS, DE, DE (European patent), DK, DK (European patent), ES, ES (European patent), FI, FR (European patent), GA (OAPI patent), GB, GB (European patent), GN (OAPI patent), GR (European patent), HU, IT (European patent), JP, KP, KR, LK, LU, LU (European patent), MC (European patent), MG, ML (OAPI patent), MN, MR (OAPI patent), MW, NL, NL (European patent), NO, PL, RO, RU, SD, SE, SE (European patent), SN (OAPI patent), TD (OAPI patent), TG (OAPI patent), US.

**Published**
*With international search report.*

(54) Title: A CONTAINER FOR BEER AND OTHER BEVERAGES

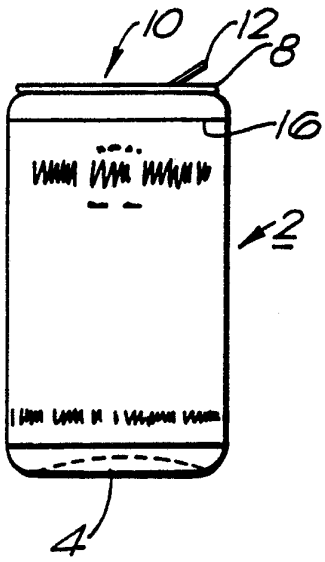


(57) Abstract

A container for beer and other beverages has a plastics material body (2) closed by way of an end closure (10). When the container is opened by removing the closure (10), the body member (2) defines a drinking vessel having an unrestricted mouth opening (6). This obviates the need to dispense the contents of the container into a further vessel. In order to contain beer and other carbonated beverages, the body member (2) is made of nylon and PET laminated together. A shrink wrap label (16) may be applied externally of the body member (2) to identify both the contents of the container and to bear customised information as to the occasion at which the containers are provided.

*FOR THE PURPOSES OF INFORMATION ONLY*

Codes used to identify States party to the PCT on the front pages of pamphlets publishing international applications under the PCT.

| | | | | | |
|---|---|---|---|---|---|
| **AT** | Austria | **ES** | Spain | **MG** | Madagascar |
| **AU** | Australia | **FI** | Finland | **ML** | Mali |
| **BB** | Barbados | **FR** | France | **MN** | Mongolia |
| **BE** | Belgium | **GA** | Gabon | **MR** | Mauritania |
| **BF** | Burkina Faso | **GB** | United Kingdom | **MW** | Malawi |
| **BG** | Bulgaria | **GN** | Guinea | **NL** | Netherlands |
| **BJ** | Benin | **GR** | Greece | **NO** | Norway |
| **BR** | Brazil | **HU** | Hungary | **PL** | Poland |
| **CA** | Canada | **IT** | Italy | **RO** | Romania |
| **CF** | Central African Republic | **JP** | Japan | **RU** | Russian Federation |
| **CG** | Congo | **KP** | Democratic People's Republic of Korea | **SD** | Sudan |
| **CH** | Switzerland | | | **SE** | Sweden |
| **CI** | Côte d'Ivoire | **KR** | Republic of Korea | **SN** | Senegal |
| **CM** | Cameroon | **LI** | Liechtenstein | **SU** | Soviet Union |
| **CS** | Czechoslovakia | **LK** | Sri Lanka | **TD** | Chad |
| **DE** | Germany | **LU** | Luxembourg | **TG** | Togo |
| **DK** | Denmark | **MC** | Monaco | **US** | United States of America |

# A CONTAINER FOR BEER AND OTHER BEVERAGES

The present invention relates to a container for beer and other beverages.

It is difficult to serve a large number of people in a short time with beverages where that beverage has to be dispensed from a container, such as a can or bottle, into a drinking vessel. The problem is excarcerbated at large public venues, for example public concerts, where it is illegal to give customers cans or bottles, and beverages have to be served in plastics containers.

The present invention seeks to overcome the dispensing problems identified above.

According to the present invention there is provided a container for beer and other beverages, comprising a body member having an opening at one end thereof, and a removable end closure member closing said opening, wherein said body member is sufficiently strong to contain a beer or other carbonated beverage, wherein said body member is shaped and configured to define a drinking vessel and said opening defines an unrestricted mouth opening of the drinking vessel, and wherein said end closure member is completely removable to thereby reveal said unrestricted mouth opening.

A container of the invention is intended to be filled with beer or another beverage and closed by the application of the end closure member thereto. Then, to dispense the beverage, it is necessary only to remove the end closure member to thereby provide a drinking vessel filled with the beverage. There is no need to dispense the beverage from the container into another vessel.

Preferably, the body member is made of a plastics material. A container of the invention is therefore ideal for use at public venues where plastics containers have to be provided for all beverages.

Beer is traditionally sold in glass bottles or metal cans. This is because most plastics cans and other plastics containers are not suitable for containing beer. The conventional plastics containers are generally unable to withstand the pressure of the beer, and/or they are permeable to gas, particularly to oxygen, such that the beer degrades from an ingress of gas.

In a preferred embodiment, said body member is fabricated from at least two plastics materials, the first plastics material being able to impart structural rigidity and the ability to withstand pressure to the body member, and the second plastics material being arranged to provide a barrier to the passage of gas.

Where the container is to hold beer or other carbonated beverages, said first plastics material is preferably arranged to withstand pressures up to approximately 420kPa.

In a preferred embodiment said first plastics material is polyethylene terephthalate (PET).

Preferably, said second plastics material is nylon.

In a preferred embodiment, said body member is formed from a layered construction of said at least two plastics materials. This layered construction enables two or more plastics materials to be selected to enable the container fabricated therefrom to meet a number of predetermined, particular requirements.

The plastics materials from which the container is constructed may be arranged in adjacent layers which are fastened together and/or the layers may be laminated. A more intimate construction may involve the combination of the plastics materials at molecular level.

Where the container is to hold beer or other carbonated beverages, the closed end of said container opposed to said one end is preferably curved to extend inwardly of said body member. This construction enhances the pressure rating of the closed end of said container.

In a preferred embodiment, said end closure member and said body member are connected by way of a tear strip, said tear strip extending completely around the perimeter of said end closure member adjacent to said mouth opening such that removal of said tear strip removes said end closure member and reveals said mouth opening.

For example, said tear strip may terminate in a ring pull. Preferably, the end closure member is formed of a metal foil enclosed by plastics material.

In an alternative embodiment, said end closure member is a lid having an internal screw thread, and wherein an external screw thread is formed on said body member adjacent said opening for engagement with the internal screw thread of said lid.

Preferably, said lid is fabricated from the same material as said body member.

Said external screw thread of said body member may extend around said body member spaced from the opening thereof to thereby define a plain mouth opening.

By this means, the plain mouth opening defines a rim from which the contents of the container may be drunk.

In a further alternative embodiment, said end closure member is connected by a tearing denotation to a rim extending completely around the periphery of said end closure member, wherein said rim is connected to said opening of said body member to define a rim of said mouth opening, and wherein opening means are affixed to said end closure member to enable the separation thereof from the rim at said tearing denotation.

For example, said opening means may comprise a ring pull. The end closure member in this embodiment may be of any required material, but in a preferred embodiment is metal.

It is, of course, possible to manufacture the body member to have thereon information as to its contents and their provenance. However, in a preferred embodiment, the body member is enclosed by a shrink wrap layer, preferably incorporating a label. This label may give details not only of the contents of the container, but may also be customised to relate to the particular venue or occasion on which the beverages are being dispensed.

The present invention also extends to a method of dispensing beer and other beverages comprising the steps of packaging the beverage to be dispensed in a container as defined above, and subsequently removing and discarding said end closure member to provide a drinking vessel containing the beverage ready for consumption.

Embodiments of the present invention will hereinafter be described, by way of example, with reference to the accompanying drawings, in which:

Figure 1 shows an end elevation of one embodiment of a container of the invention,

Figure 2 shows the container of Figure 1 as it is being opened,

Figure 3 is a top plan view of the container of Figures 1 and 2 showing an end closure member thereof,

Figure 4 shows the container of Figures 1 and 2 after the removal of the end closure,

Figure 5 shows an end elevation of a further embodiment of a container of the present invention, and

Figure 6 shows a third embodiment of a container of the invention.

Figures 1 to 4 show a first embodiment of a beer can of plastics material for use for dispensing beer. In this respect, the beer can comprises a substantially cylindrical body member 2 of plastics material having a closed end 4 and a generally circular opening 6 at the end thereof opposed to said closed end 4. A generally planar, circular end closure member 10 is provided to close the opening 6 of the body member 2, and thereby seal the can. In this respect, the end closure member 10 is made of a metal or metal foil and, in its closed position, is sealed to a rim 8 by way of a circumferential tearing denotation 14 which extends completely around the periphery of the end closure member 10. The rim 8 is fastened to the opening 6 of the body member 2. A ring pull 12 is fastened to the closure member 10 in known manner.

In use, beer is filled into the plastics material body member 2. The closure member 10 is preferably formed in one piece with the rim 8 and the tearing denotation 14, and the rim 8 is then heat sealed onto the opening 6 of the body member 2 to close and seal the filled can. When access to the contents of the can is required, the end

closure member 10 is removed by tearing along the circumferential tearing denotation 14 to thereby remove the whole of the end closure member 10. The rim 8 then defines a mouth opening for the body member 2. When the closure member 10 has been removed, the body member 2 and the rim 8 thereof together define a drinking vessel.

Drinking vessels which are to be used at large public venues or events have to be made of plastics material. Accordingly, the body member 2 of the can is made of plastics material, for example, of polyethylene terephthalate (PET). However, although this plastics material is able to withstand the pressure applied thereto by beer, it is permeable to various gases including oxygen. Accordingly, the PET is preferably coated, at least on the outside thereof, with a gas barrier layer. In a preferred embodiment, the PET and gas barrier are laminated. The gas barrier layer may, for example, be a layer of nylon.

A beer can, for example, as illustrated in Figures 1 and 4, has to withstand pressures of the order of approximately 420kPa. This pressure is within the capabilities of PET. Furthermore, the PET has sufficient rigidity to enable filled cans to be stacked one on the other, or on pallets, for storage and transportation.

It will be seen that the body member 2 of the can illustrated in Figures 1 to 4 has a closed end surface 4 thereof which is curved inwardly. This is advantageous as it enhances the pressure withstanding capability, at least of the closed end.

In Figure 1, the body member 2 is shown with a shrink wrap label 16 applied therearound. Preferably, this shrink wrapped label 16 is printed with information not only about the contents of the can, but also about the venue and

event.

It will be appreciated that although the removal of the end closure member 10 reveals an unrestricted mouth opening defined by the rim 8, this rim may be less than pleasant to drink from, particularly if it is made of metal. In a preferred embodiment, the rim 8 is made of a plastics material.

In an alternative embodiment, the closure member 10 and the surrounding rim 8 are made of a metal foil interposed between two layers of plastics material. In this manner, the rim 8 defining the mouth opening is effectively a plastics rim to someone drinking from the can.

Figure 5 shows an alternative embodiment of a container of the present invention. In the embodiment of Figure 5, a plastics material body member 20, substantially in the shape of a traditional beer glass, is provided with an closure member 22. The closure member 22 is connected to the end opening of the body member 20 by way of a circumferential tear strip 24 which extends completely around the perimeter of said end closure member 22. It will be appreciated that when said tear strip 24 is removed, the end closure member 22 is also completely removed, and a plain mouth opening of said container 20 is defined thereby. To facilitate the removal of the tear strip 24, a ring pull or other opening means 26 extends from the tear strip 24 and is integrally formed therewith.

Figure 6 shows a still further embodiment of a container of the present invention. In this embodiment the body member 120 is formed of plastics material in the shape of a beer glass. At its open end, the body member 120 has a mouth opening 122. An interrupted external screw thread

124 is provided on the body member 120, but is spaced from the mouth opening 122 so that the area of the mouth opening 122 remains plain. The container is also provided with a lid 126 having an internal screw thread (not shown) arranged to engage the screw thread 124. Thus, when the body member 120 has been filled, the lid 126 is engaged thereon by engaging the screw threads by screwing. When it is required to have access to the contents of the container, the lid 126 is removed and may be discarded. Preferably, the lid 126 and the body member 120 are fabricated from the same material, for example, a laminated or layered plastics material as discussed above.

The external screw thread 124 on the body member 120 is advantageous as it imparts stiffness thereto. Thus, the presence of the screw thread 124 enables the material of the body member 120 adjacent the mouth opening 122 to be kept thin, if required, to enhance the acceptability of the body member 120 as a drinking vessel.

In the embodiments described and illustrated, the containers all have a substantially circular cross-section. Whilst this is generally preferred, it is, of course, possible for the containers to have any required cross-sectional shape.

The containers illustrated have been described specifically as containers for beer. It will be appreciated that they may be utilised to contain any contents required. In this respect, it may be wished to make the particular shape of the body member, for example, to ape the traditional shape of a drinking vessel for the contents. For example, if required, where a container of the invention is for storing and dispensing wine, the plastics material body member may be in the shape of a stemmed wine glass.

It will be appreciated that modifications and variations may be made to the embodiments of the invention described and illustrated within the scope of the appended claims.

CLAIMS

1. A container for beer and other beverages, comprising a body member having an opening at one end thereof, and a removable end closure member closing said opening, wherein said body member is sufficiently strong to contain a beer or other carbonated beverage, wherein said body member is shaped and configured to define a drinking vessel and said opening defines an unrestricted mouth opening of the drinking vessel, and wherein said end closure member is completely removable to thereby reveal said unrestricted mouth opening.

2. A container as claimed in Claim 1, wherein said body member is made of plastics material.

3. A container as claimed in Claim 2, wherein said body member is fabricated from at least two plastics materials, the first plastics material being able to impart structural rigidity and the ability to withstand pressure to the body member, and the second plastics material being arranged to provide a barrier to the passage of gas.

4. A container as claimed in Claim 3, wherein said first plastics material is arranged to withstand pressures up to approximately 420kPa.

5. A container as claimed in Claim 3 or 4, wherein said first plastics material is polyethylene terephthalate.

6. A container as claimed in any of Claims 3 to 5, wherein said second plastics material is nylon.

7. A container as claimed in any of Claims 3 to 6, wherein said body member is formed from a layered construction of said at least two plastics materials.

8. A container as claimed in any preceding claim, wherein the closed end of said container opposed to said one end is curved to extend inwardly of said body member.

9. A container as claimed in any preceding claim, wherein said end closure member and said body member are connected by way of a tear strip, said tear strip extending completely around the perimeter of said end closure member adjacent to said mouth opening such that removal of said tear strip removes said end closure member and reveals said mouth opening.

10. A container as claimed in Claim 9, wherein said tear strip terminates in a ring pull.

11. A container as claimed in Claim 9 or 10, wherein said end closure member is formed of metal foil enclosed by plastics material.

12. A container as claimed in any of Claims 1 to 8, wherein said end closure member is a lid having an internal screw thread, and wherein an external screw thread is formed on said body member adjacent said opening for engagement with the internal screw thread of said lid.

13. A container as claimed in Claim 12, wherein said lid is fabricated from the same material as said body member.

14. A container as claimed in Claim 12 or 13, wherein said external screw thread extends around said body member spaced from the opening thereof to thereby define a plain mouth opening.

15. A container as claimed in any of Claims 1 to 8, wherein said end closure member is connected by a tearing denotation to a rim extending completely around the

periphery of said end closure member, wherein said rim is connected to said opening of said body member to define a rim of said mouth opening, and wherein opening means are affixed to said end closure member to enable the separation thereof from the rim at said tearing denotation.

16. A container as claimed in Claim 15, wherein said opening means comprises a ring pull.

17. A container as claimed in Claim 15 or 16, wherein said end closure member is metal.

18. A container as claimed in any preceding claim, wherein the body member is enclosed by a shrink wrap layer.

19. A container as claimed in Claim 18, wherein said shrink wrap layer incorporates a label.

20. A container for beer and other beverages substantially as hereinbefore described with reference to the accompanying drawings.

21. A method of dispensing beer and other beverages comprising the steps of packaging the beverage to be dispensed in a container as claimed in any of the preceding claims with the end closure member closing the container, and subsequently removing and discarding said end closure member to provide a drinking vessel containing said beverage ready for consumption.

FIG. 1

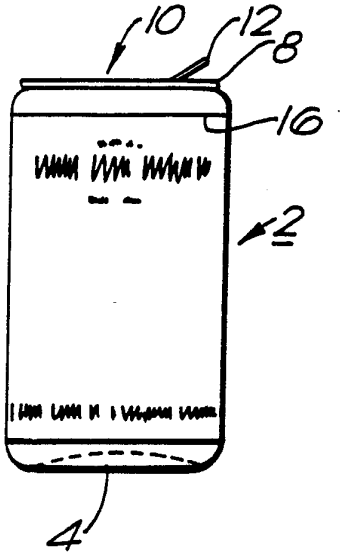


FIG. 2

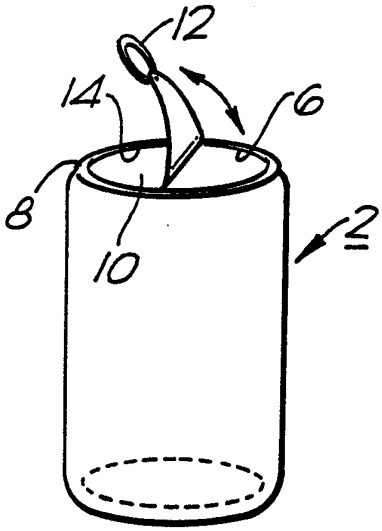


FIG. 3

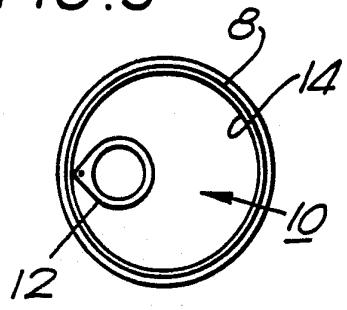


FIG. 4

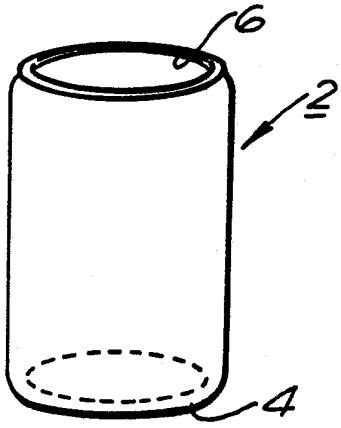


FIG. 5

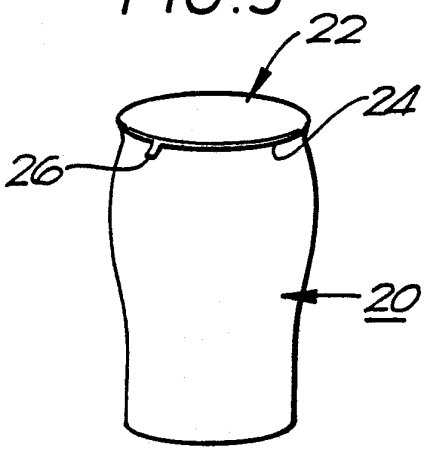


FIG. 6

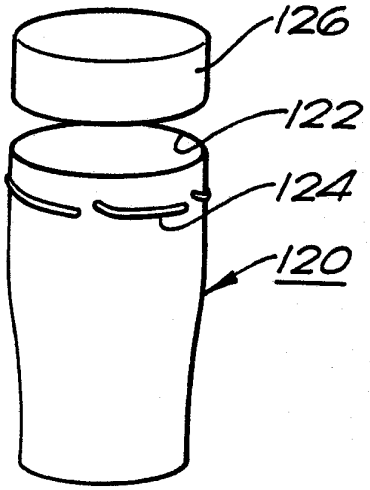

# INTERNATIONAL SEARCH REPORT

PCT/GB 92/00623

International Application No

## I. CLASSIFICATION OF SUBJECT MATTER (if several classification symbols apply, indicate all)[6]

According to International Patent Classification (IPC) or to both National Classification and IPC

Int.Cl. 5 B65D17/00

## II. FIELDS SEARCHED

Minimum Documentation Searched[7]

| Classification System | Classification Symbols |
|---|---|
| Int.Cl. 5 | B65D |

Documentation Searched other than Minimum Documentation to the Extent that such Documents are Included in the Fields Searched[8]

## III. DOCUMENTS CONSIDERED TO BE RELEVANT[9]

| Category ° | Citation of Document,[11] with indication, where appropriate, of the relevant passages[12] | Relevant to Claim No.[13] |
|---|---|---|
| X | FR,A,2 276 226 (PLASTONA) 23 January 1976<br>see page 2, line 15 - line 29<br>see page 4, line 14 - line 26; claims 1-10;<br>figures 1-11 | 1-8,21 |
| X | EP,A,0 302 952 (VILAMONTE) 15 February 1989<br>see claims 1-4; figures 1-7 | 1,2,<br>9-11,<br>15-17,21 |

° Special categories of cited documents :[10]

"A" document defining the general state of the art which is not considered to be of particular relevance

"E" earlier document but published on or after the international filing date

"L" document which may throw doubts on priority claim(s) or which is cited to establish the publication date of another citation or other special reason (as specified)

"O" document referring to an oral disclosure, use, exhibition or other means

"P" document published prior to the international filing date but later than the priority date claimed

"T" later document published after the international filing date or priority date and not in conflict with the application but cited to understand the principle or theory underlying the invention

"X" document of particular relevance; the claimed invention cannot be considered novel or cannot be considered to involve an inventive step

"Y" document of particular relevance; the claimed invention cannot be considered to involve an inventive step when the document is combined with one or more other such documents, such combination being obvious to a person skilled in the art.

"&" document member of the same patent family

## IV. CERTIFICATION

| Date of the Actual Completion of the International Search | Date of Mailing of this International Search Report |
|---|---|
| 14 JULY 1992 | 31.07.92 |
| **International Searching Authority**<br>EUROPEAN PATENT OFFICE | **Signature of Authorized Officer**<br>ANDEREGG P-Y. F. |

# ANNEX TO THE INTERNATIONAL SEARCH REPORT ON INTERNATIONAL PATENT APPLICATION NO. GB 9200623 SA 58149

This annex lists the patent family members relating to the patent documents cited in the above-mentioned international search report. The members are as contained in the European Patent Office EDP file on 14/07/92
The European Patent Office is in no way liable for these particulars which are merely given for the purpose of information.

| Patent document cited in search report | Publication date | Patent family member(s) | | Publication date |
|---|---|---|---|---|
| FR-A-2276226 | 23-01-76 | GB-A- | 1508574 | 26-04-78 |
| | | AT-B- | 352561 | 25-09-79 |
| | | AU-A- | 8241475 | 06-01-77 |
| | | BE-A- | 830777 | 16-10-75 |
| | | CA-A- | 1036517 | 15-08-78 |
| | | CH-A- | 590765 | 31-08-77 |
| | | DE-A- | 2528598 | 15-01-76 |
| | | JP-A- | 51024373 | 27-02-76 |
| | | LU-A- | 72875 | 29-09-75 |
| | | NL-A- | 7507710 | 31-12-75 |
| | | SE-B- | 420396 | 05-10-81 |
| | | SE-A- | 7507392 | 30-12-75 |
| EP-A-0302952 | 15-02-89 | US-A- | 4756443 | 12-07-88 |