May 15, 1934. A. G. CLAVIER 1,959,019

MICRORAY TUBE

Filed March 7, 1932

FIG. 1

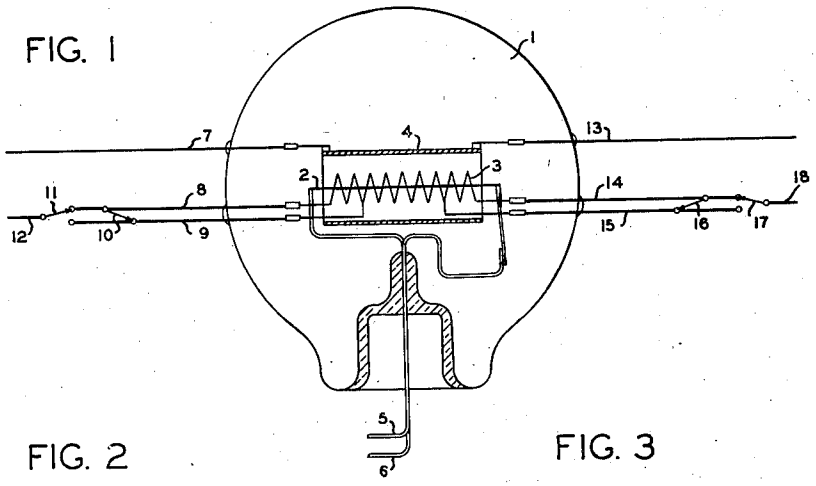

FIG. 2

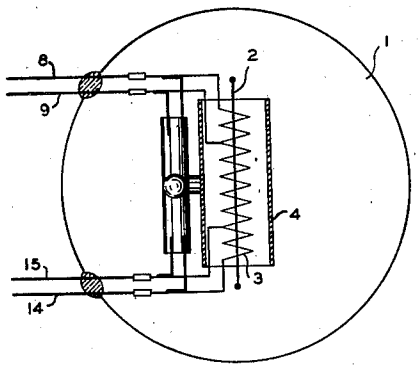

FIG. 3

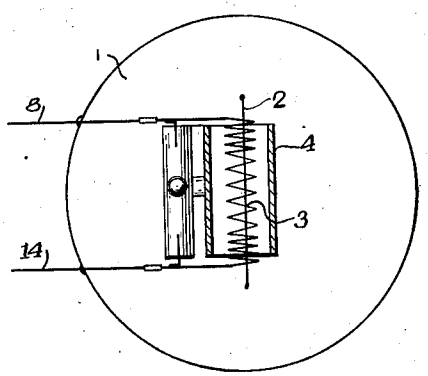

FIG. 4

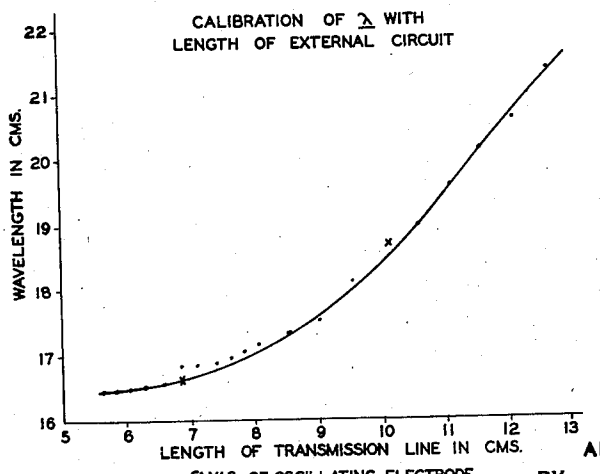

INVENTOR
ANDRE' G. CLAVIER

BY R. C. Hopgood

ATTORNEY

Patented May 15, 1934 1,959,019

UNITED STATES PATENT OFFICE

1,959,019

MICRORAY TUBE

Andre G. Clavier, Glen Ridge, N. J., assignor to International Communications Laboratories, Inc., Newark, N. J., a corporation of New York

Application March 7, 1932, Serial No. 597,248

7 Claims. (Cl. 250—27.5)

This invention relates to micro-ray tubes.

By micro-rays is meant electromagnetic waves lying, approximately, within the range of wave lengths between one and one hundred centimeters.

In my United States Patent No. 1,928,408, I have disclosed a device for producing micro-rays, and auxiliary apparatus for utilizing such rays in a transmission system. The device referred to consists of a highly evacuated chamber in which there are three electrodes, namely, a cathode which consists of a straight wire, an oscillating electrode which consists of a helix surrounding the cathode with its axis along the cathode, and a metallic reflecting electrode surrounding the oscillating electrode and concentric therewith. The auxiliary apparatus comprises circuits and batteries for applying suitable potentials to the elements of the tube, an antenna or doublet for receiving or broadcasting micro-ray signals, and a transmission line connecting the tube to the antenna or doublet.

In my co-pending applications, Serial Nos. 576,973 and 576,974, also filed November 24, 1931, I have disclosed certain adjustments of the circuits and batteries connected with a micro-ray tube for the most efficient production of modulated micro-ray signals and for the most efficient detection of such signals. These two latter applications contain curves showing the proper relative potentials to apply to the electrodes of a tube for the production of waves of constant frequency with different values of applied potential.

In my co-pending applications, Serial Nos. 582,092, filed December 19, 1931, and 595,765, filed February 29, 1932, I have disclosed further improvements in micro-ray tubes in which the leads from the transmission line and circuits are connected to the electrodes at various different points.

Extensive experiments which I have conducted have shown that the transmission of intelligence with micro-rays may be accomplished with a very high efficiency and, in many cases, presents certain advantages over the longer wave lengths. Because of the extremely high frequency of micro-rays a great many carrier channels may be superimposed on a micro-ray, or the ray may be used for high speed picture transmission or for very high quality television, in which a broad band of frequencies would be required. This is true, of course, because a broad band of modulating signals would cover a range of frequencies which would be a very small percentage of the frequency of the ray.

For maximum efficiency in a signaling system, it is, of course, essential that the transmitting and receiving apparatus be adjusted for maximum efficiency on the wave length used. This implies that the tubes should be especially designed for a particular wave length. In order to operate a plurality of micro-ray channels in close proximity without interference, it is also necessary to be able to design the tubes for a particular wave length, or range of wave lengths.

An object of this invention is to provide a method of and means for designing a micro-ray tube for a particular wave length.

Another object of the invention is to provide means for varying the wave length at which a tube is most efficient.

Another object of the invention is to provide a method of and means for using the tube with the necessary auxiliary apparatus for a micro-ray transmission system in which the system as a whole will operate with maximum efficiency at a particular wave length.

In the drawing, which will be described in more detail later:

Fig. 1 is a diagram of a micro-ray tube showing means for changing the wave length at which the tube will operate with maximum efficiency;

Fig. 2 is a diagram of another type of micro-ray tube showing the same means of changing the wave length applied to this tube as that shown in Fig. 1;

Fig. 3 is a diagram of a micro-ray tube showing a different method of changing the wave length; and

Fig. 4 is a curve showing the relation of the length of the transmission line between a tube and antenna to the wave length at which the tube will operate with maximum efficiency.

In order to approach the problem of designing a micro-ray tube for maximum efficiency at a specific wave length, it is necessary, first, to analyze the properties of micro-ray tubes in general. In the micro-ray tubes disclosed in my previous applications, a positive potential was applied to the oscillating electrode in order to draw electrons to it from the cathode and a negative potential was applied to the reflecting electrode in order to repel electrons which passed through the meshes of the oscillating electrode, and drive them back toward the oscillating electrode.

In order to analyze the operation of the tube constructed and operated in the manner mentioned, let us first determine the direct electronic

current at any point of the oscillating electrode.

Let us call:

r_a the radius of the cathode;

r_o the radius of the imaginary cylinder on which the oscillating electrode is wound; and

r any radius between r_a and r_o.

Let us assume that the oscillating electrode is in a state of oscillation. Then, at a particular point x of this electrode, the difference in potential between the particular point and the closest point on the cathode is (at the time t):

$$E_o+e_x \cos \omega t=E_o(1+m_x \cos \omega t) \quad (1)$$

in which:

E_o is the value of the steady potential applied to the oscillating electrode;

e_x is the amplitude of the oscillating potential at point x; and

ω is 2π times the frequency.

The ratio

$$m_x=\frac{e_x}{E_o}$$

is, of course, a function of the position of the point on the oscillating electrode.

If the influence of initial velocities be neglected, as well as the influence of the bias potential applied to the reflecting electrode, and also if the speed of propagation of the electric field is considered to be very great in comparison with the speed of the electrons, it can be shown that any electrons leaving the cathode at the time t will reach the plane of the oscillating electrode at the time t_o, such as:

$$\frac{\sqrt{\log_e \frac{r_o}{r_a}}}{\sqrt{\frac{2EE_o}{m}}}\int_{r_a}^{r_o}\frac{dr}{\sqrt{\log_e \frac{r}{r_a}}}=\int_t^{t_o}\sqrt{1+m_x \cos \omega t}\,dt \quad (2)$$

where:

e is the base for natural logarithms;

E is the charge on an electron; and

m is the mass of an electron.

Let us call the value on the left side of the equation A. It is the value of the time taken by an electron to travel from the cathode to the oscillating electrode when the latter is not oscillating. This value can be computed for any given tube and takes the following form:

$$A=\frac{a}{\sqrt{E_o}}10^{-9} \text{ sec.} \quad (3)$$

a being a numerical factor depending on the dimensions of the tube.

When the tube is oscillating, Equation (2) must be fulfilled or, in simplified form:

$$A=\int_t^{t_o}\sqrt{1+m_x \cos \omega t}\,dt \quad (4)$$

m_x being assumed to be small, as we are studying the conditions for producing oscillations, so that Equation (4) may be simplified and leads to:

$$\tau=t_o-t=A-\frac{m_x}{\omega}\sin\frac{\omega A}{2}\cos\omega\left(t+\frac{A}{2}\right) \quad (5)$$

where τ is the time of transit of electrons under dynamic conditions.

The electronic current is proportional to:

$$\frac{1}{\frac{d}{dt}(t+\tau)} \quad (6)$$

so that, finally, if we call s the number of electrons which fall directly on the oscillating electrode, the value of the direct electronic current may be written:

$$i_d=\frac{sI_e}{A}\left[1+m_x \sin\frac{\omega A}{2}\sin\omega\left(t-\frac{A}{2}\right)\right] \quad (7)$$

where:

I_e is the value of the current emitted from the cathode; and

A is the total length of the wire of the oscillating electrode.

Those electrons which do not fall directly on the oscillating electrode go through and fall into a retarding field which gives a reflected electronic current which must be considered in studying the conditions for producing oscillations. The value of the retarding field depends on the polarization of the reflecting electrode. Let:

$$n_x=\frac{e_x}{E_o+E_r} \quad (8)$$

where:

e_x and E_o are as above; and

E_r is the value of the bias on the reflecting electrode.

In a similar manner to that used above, it can be shown that the time τ'' taken by the electrons in the space between the oscillating electrode and the reflecting electrode is:

$$\tau''=2B+\frac{n_x}{2\omega}\sin\omega t''-\frac{n_x}{2\omega}\sin\omega t_o \quad (9)$$

where:

B is the time taken by the electrons (when there is no oscillation) from the plane of the oscillating electrode to the point where the electrons turn back;

t'' is the time elapsed from the start to the point where the electrons turn back; and

t_o is the time elapsed from the start to the arrival in the plane of the oscillating electrode.

B is given by the equation:

$$B=\frac{1}{\sqrt{\frac{2}{m}}}\int_{r_o}^{r_x}\frac{dr}{\sqrt{E_o-\frac{E_o+E_r}{\log_e\frac{r_r}{r_o}}\log_e\frac{r}{r_o}}} \quad (10)$$

in which:

r_r is the radius of the reflecting electrode;

E_r is the value of the bias on the reflecting electrode and

r_x is the radius where the electron turns back and equals

$$r_o e^{\frac{E_o}{E_o+E_r}\log\frac{r_r}{r_o}}$$

In Equation (9), t_o is approximately equal to:

$$t_o=t+A \quad (11)$$

so that we have, approximately:

$$t_x=t+A+B \quad (12)$$

Finally, Equation (9) may be written:

$$\tau''=2B+\frac{n_x}{\omega}\sin\omega B.\cos\omega\,(t+A+B) \quad (13)$$

so that the reflected electronic current which is proportional to:

$$\frac{1}{\frac{d}{dt}(t+\tau+\tau'')} \quad (14)$$

may be written, due account being taken of phase relations:

$$i_r=\frac{(1-s)I_o}{\Lambda}\left[1+m_x \sin\omega\frac{A}{2}\sin\omega\left(t-\frac{A}{2}-2B\right)+ n_x \sin\omega B \sin\omega(t-B)\right] \quad (15)$$

in which s is the same numerical factor as before which, in the first approximation, is given by the ratio of the area unobscured to the total area of the imaginary cylinder on which the oscillating electrode is wound.

Therefore, the total electronic current falling on point x of the oscillating electrode is:

$$i_{ox}=i_d+i_r \quad (16)$$

The electrons which go through the meshes of the oscillating electrode a second time toward the cathode enter the general process as outlined above and cannot be distinguished from the electrons leaving the cathode for the first time.

The time average power at point x on the oscillating electrode is derived from the foregoing considerations and is equal to:

$$W_x=\frac{E_oI_o}{\Lambda}\left[1-\frac{1}{2}\frac{e^2x}{E^2}\left(\sin^2\omega\frac{A}{2}+(1-s)\frac{E_o}{E_o+E_r}\sin\omega B.\sin\omega(A+B)\right)\right] \quad (17)$$

If we assume that the oscillating electrode has a node of potential at its central point, which has been found experimentally to be true, then we have:

$$e_x=\overline{E}_x\sqrt{2}\sin\frac{2\pi x}{\lambda} \quad (18)$$

λ being the wave length along the wire of the oscillating electrode, and $\bar{E}_x$ being the mean square root value of the amplitude of oscillation along the oscillating electrode. The total power dissipated on the oscillating electrode is, then:

$$W=E_oI_o\left(1-\frac{1}{2}\frac{\overline{E}_x^2}{E_o^2}Q\right) \quad (19)$$

in which Q is a function given by:

$$Q=\left(1-\frac{\lambda}{2\pi\Lambda}\sin 2\pi\frac{\Lambda}{\lambda}\right)P \quad (20)$$

and P, in its turn, is given by:

$$P=\sin^2\frac{\omega A}{2}+(1-s)\frac{E_o}{E_o+E_r}\sin\omega B\cdot\sin\omega(A+B) \quad (21)$$

The above equations are sufficient to give an explanation of all the properties of the micro-ray tube; we now want to apply these equations with a view to dimensioning tubes adapted to produce a particular wave length with maximum efficiency.

The function P gives the practical rules which must be followed to adjust the potentials on the oscillating and reflecting electrodes. This function gives the theoretical explanation of the constant frequency curves referred to above in connection with my co-pending applications, Serial Nos. 576,973 and 576,974. The function Q contains a factor which involves the length of the wire of the oscillating electrode. As we want to produce very short waves, the factor

$$\frac{\lambda}{2\pi} \quad (22)$$

is always small in practical cases.

We must now consider the influence of the external circuit in order to obtain the conditions for suitably dimensioning the oscillating electrode and other geometrical measurements for the tube. The tube and its external circuit is an electrical system in a part of which (the oscillating electrode) a retarded leakage current exists, as shown above. We may then assume that for a certain state of oscillation the oscillating electrode behaves as a line with distributed constants r (resistance), l (inductance), g (leakance) and c (capacity). But we have to write:

$$-\begin{cases}-\frac{\delta v}{\delta x}=ri+l\frac{\delta i}{\delta t}\\ -\frac{\delta i}{\delta n}=g(v)+c\frac{\delta v}{\delta t}\end{cases} \quad (23)$$

where (v) represents the value of the potential at any point taken at a time preceding the time at which we consider the equation by a certain quantity which accounts for the lag of the leakage current.

As we shall naturally try a solution of the form:

$$v=Ve^{j\omega t-(\alpha-j\beta)x} \quad (24)$$

the Equations (23) can also be written with the present value of the function (v) but with a complex value for the leakance g.

It can then be shown that the tube acts approximately like a source of power of very high frequency with an internal impedance equal to:

$$\sqrt{\frac{l}{c}}\tanh(\alpha-j\beta)\frac{\Lambda}{2} \quad (25)$$

The power which the tube can deliver is also shown to be proportional to the following factor:

$$\beta\sinh\alpha\Lambda\cos\beta\Lambda+d\cosh d\Lambda\sin\beta\Lambda \quad (26)$$

This power, made up of two terms, will pass through a maximum in the case of cos $\beta\Lambda$ and sin $\beta\Lambda$ being both positive, i. e., in the region:

$$\frac{\Lambda}{k}>\lambda>\frac{\Lambda}{k+\frac{1}{4}} \quad (27)$$

where k is an integer number. Of course, in Equation (27) λ is the wave length along the wire of the oscillating electrode. It may be different from the corresponding wave length in vacuum but, as we have no reliable means to appreciate the difference, we can consider Equation (27) as giving a first approximation, even for the wave length in vacuum. $k=1$ is, naturally, the most frequent case and the experiments give a very good verification of the theory. For instance, the different wave lengths which may be obtained with a certain tube having 18 turns and a total length of oscillating electrode equal to 19.8 centimeters is given by the attached curve (Fig. 4), which shows that the variation obtained experimentally was between 16.3 and 21.5 centimeters, while the theoretical condition gives, for optimum operation, the interval 15.8 to 19.8 centimeters. The output is found to be variable along the range of wave length which the tube produces with the experimental result that the wave lengths shown by crosses on the figure give the maximum output.

The following list of tubes on which the optimum wave length, experimentally determined, is shown for different lengths of oscillating elec-

trodes gives a strong support to the above theory: (27-A)

No.	No. of turns of oscillating electrode	Λ	⅘Λ	Optimum wave length	Conditions of test		
					E_o	I_o	E_r
				cm.	*+volts*	*+ma.*	*−volts*
1054	20	23	18.5	19.32	250	60	22
1055	20	------	------	19.90	220	60	29.5
1059	20	------	------	19.10	230	60	28
1072	18	19.8	15.8	18.00	270	60	40.5
1076	18	------	------	18.04	280	60	47
1084	16	17.6	14.8	16.82	310	70	39
1085	16	------	------	17.22	280	60	23
1086	16	------	------	16.90	300	60	25
1089	14	15.4	12.3	14.72	390	45	36.5
1092	14	------	------	14.72	380	50	29.5

The wave length which will be produced in a micro-ray tube will vary with changes in the external circuit connected to the tube. For any given length of the transmission line connecting a tube to a radiating doublet or antenna, the tube will produce waves of a particular length with maximum efficiency. Fig. 4 is a curve showing the wave length produced by a micro-ray transmitting system having a particular tube, with changes in the length of the transmission line, all other conditions being adjusted for optimum operation for every length considered.

If we assume that the transmission line is dissipationless and that the radiating doublet functions substantially as a load of resistance R, the equation which gives the conditions for the generation of oscillations and the value of the frequency is:

$$\sqrt{\frac{l}{c}}\tanh(\alpha-j\beta)\frac{\Lambda}{2}=\sqrt{\frac{l_o}{c_o}}\tanh(\alpha\delta+j\beta_o)L \qquad (28)$$

in which l_o and c_o are the inductance and capacity per unit length of the transmission line.

$$\beta_o=\frac{2\pi}{\lambda_o}$$

δ is given by:

$$R=\sqrt{\frac{l_o}{c_o}}\tanh\delta L \qquad (29)$$

and L is the length of the transmission line.

Equating the real parts in Equation (28) gives the conditions for the generation of oscillations. Equating the imaginary parts gives the frequency of the oscillations generated.

A particularly simple experimental case may be set up by supposing that we use a transmission line with a characteristic impedance equal to

$$\sqrt{\frac{l}{c}},$$

whence the frequency condition becomes:

$$\frac{\Lambda}{\lambda}+\frac{2L}{\lambda_o}=m \qquad (30)$$

m being an integer number.

Applying this condition (30) to the tube for which Fig. 4 has been plotted, would give the condition:

$$9.9>L>5.9 \qquad (31)$$

and we find on the curve for the same range of wave lengths (19.8 centimeters to 15.8 centimeters) that:

$$11.2>L>5.5 \qquad (32)$$

This can be considered as a very satisfactory check of the above explanation, considering that condition (30) applies only to a very particular case and can give but an approximation.

Oscillations of the same wave length would again be generated for a longer length of line, the second region being, for instance:

$$19.8>L>13.8 \qquad (33)$$

This result is also confirmed by experiment.

We have now developed the theory underlying the production of oscillations in a micro-ray tube and the use of such oscillations in a signaling system. It was stated, near the beginning of this specification, that it is highly desirable to be able to design a micro-ray tube for operation at a specific wave length. It will be observed that the above theory provides information as to how this may be accomplished. If we want to dimension a tube for a given range of wave lengths, the length of the oscillating electrode should be such as to fulfill:

$$\Lambda=\lambda_M=1.25\lambda_m \qquad (34)$$

where λ_m and λ_m are the longest and shortest wave lengths of the range, respectively.

We have, thus, a method of dimensioning an oscillating electrode in order to make a tube produce a given range of ultra-short wave lengths with satisfactory efficiency.

When we want to design tubes for shorter wave lengths, we have the choice of using an oscillating electrode wound on a cylinder of the same diameter but having fewer turns, or of decreasing the diameter of the mandrel on which the oscillating electrode is wound. The latter method is generally preferable because the oscillating electrode must stand a rather high dissipation, in view of the adjustment of the time of transit of electrons between the cathode and the oscillating electrode. When the distance between the cathode and oscillating electrode is reduced, the voltage to be used on the oscillating electrode is also reduced with a corresponding decrease in the dissipation on the oscillating electrode.

But the above considerations apply to regularly wound electrodes for experiment shows that the wave length along the grid of the wire is not widely different from the wave length in vacuum. This can be modified by using oscillating electrodes so shaped as to alter the distribution of constants along the wire of the oscillating electrode. This changes the wave length along the oscillating electrode and permits the use of longer wires for shorter wave lengths. Such a modification of the shape which has proved to be efficient experimentally is the use of oscillating electrodes with unequal spacing. One of the best shapes is obtained when the oscillating electrode has turns which are more closely spaced at both ends of said electrode.

In Fig. 1, a micro-ray tube 1, such as that disclosed in my co-pending application, Serial No. 595,765, above referred to, has a cathode 2, an oscillating electrode 3, and a reflecting electrode 4. Leads 5 and 6 are connected to the cathode 2. Lead 7 is connected to one end of the reflecting electrode 4. Lead 8 is connected to the corresponding end of the oscillating electrode 3 and lead 9 is connected to the oscillating electrode 3 at a point a few turns closer to the center of this electrode than the point at which lead 8 is connected. A switch 10 is provided for short-circuiting two leads 8 and 9, if desired, and a second switch 11 is provided for connecting lead 12 alternatively to lead 8 or 9. A transmission line may be connected to leads 7 and 12. Lead 13 is connected to the opposite end of reflecting electrode

4 from that to which lead 7 is connected, and leads 14 and 15 are connected to oscillating electrode 3 at this end in a manner similar to leads 8 and 9 at the opposite end. Switches 16 and 17 are provided, similar to switches 10 and 11, for connecting various combinations of portions of the oscillating electrode to lead 18. Leads 13 and 18 will be connected to a suitable circuit for operating the tube.

In Fig. 2 a tube is shown, of the type disclosed in my United States Patent No. 1,928,408, above referred to. Elements similar to those shown in Fig. 1 are similarly numbered and a similar system of switches may be provided for connecting various combinations of portions of the oscillating electrode 3 in the system.

It has been shown above that the wave produced by a micro-ray tube will be shorter if a shorter oscillating electrode is used. This may be accomplished by connecting lead 18 to lead 15 through switch 17, or by connecting lead 12 to lead 9 through switch 11. If both of these connections are made, naturally the wave length will be shortened accordingly. The wave length produced may also be effectively decreased by closing switch 16, thus short-circuiting leads 14 and 15, or by closing switch 10, thus short-circuiting leads 8 and 9, or by closing both of these switches at the same time. It will thus be seen that, with the arrangement shown in Figs. 1 and 2, the single micro-ray tube may be caused to produce waves in a considerable number of ranges. Obviously, the same principle may be extended further. There is, of course, some influence of the end circuits but it will remain small if those end circuits are not comparable in length to the main oscillating circuit.

It has been mentioned above that the effective length of the oscillating electrode may be changed by altering the distribution of constants along the wire and, thus, changing the wave length of the tube, and that a modification which has been proved to be efficient experimentally is the use of oscillating electrodes with unequal spacing. In Fig. 3 this modification is shown. The oscillating electrode 3 in that figure has its turns more closely spaced at the ends than at the center. A tube such as that shown in Fig. 3, will, of course, have a cathode and reflecting electrode, as in Figs. 1 and 2, and the connections to the electrodes may be made in any desirable way, such, for example, as the methods shown in Figs. 1 and 2.

What is claimed is:

1. A micro-ray vacuum tube having a cathode, an oscillating electrode, and a reflecting electrode, said oscillating electrode having a length equal to the longest wave to be produced in said tube and equal to 1.25 times the shortest wave to be produced in said tube.

2. A micro-ray vacuum tube having a cathode, an oscillating electrode, and a reflecting electrode, and means for short-circuiting a portion of said oscillating electrode.

3. A micro-ray vacuum tube having a cathode, a reflecting electrode, and an oscillating electrode therein, a plurality of leads connected to said oscillating electrode and projecting from said tube in one direction, and a plurality of leads connected to said oscillating electrode and projecting from said tube in an opposite direction.

4. A micro-ray tube having a cathode, a reflecting electrode, and an oscillating electrode therein, said oscillating electrode comprising a plurality of turns of wire having unequal spacing between said turns.

5. A micro-ray vacuum tube having a cathode, a reflecting electrode, and an oscillating electrode consisting of an electrical conductor wound in a helix, the turns of said helix being unequally spaced.

6. A micro-ray vacuum tube having a cathode, a reflecting electrode, and an oscillating electrode consisting of an electrical conductor wound in a helix, the turns of said helix being spaced more closely at its ends than in the center.

7. A micro-ray vacuum tube comprising a cathode, an oscillating electrode, a reflecting electrode, an evacuated vessel enclosing said cathode and said electrodes, a lead connected to each end of said oscillating electrode, and means for changing the effective length of said oscillating electrode thereby to vary the frequency of the oscillations producible by said tube.

ANDRE G. CLAVIER.