H. N. AMERMAN & W. E. EVELAND.

Tire-Bending Machines.

No. 151,739. Patented June 9, 1874.

Fig. 1

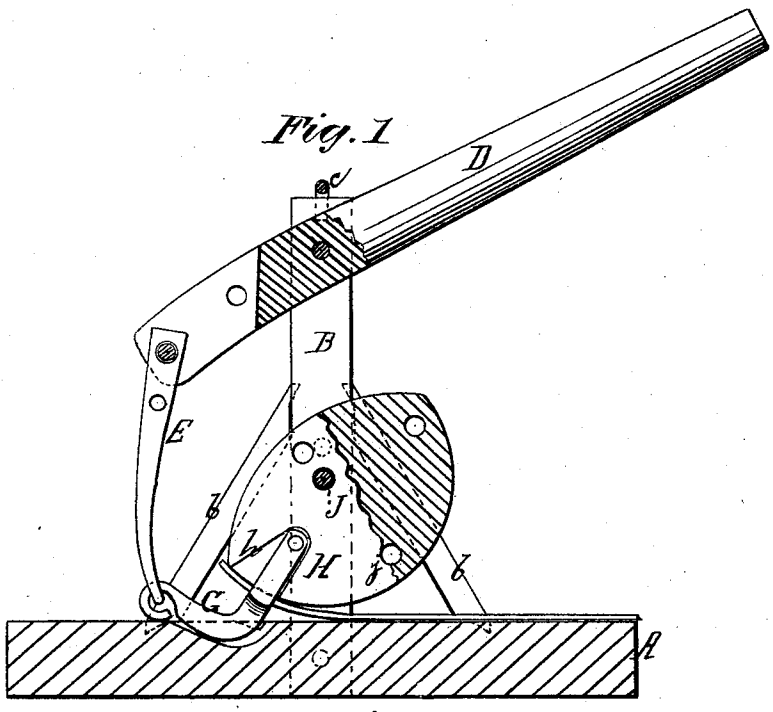

Fig. 2

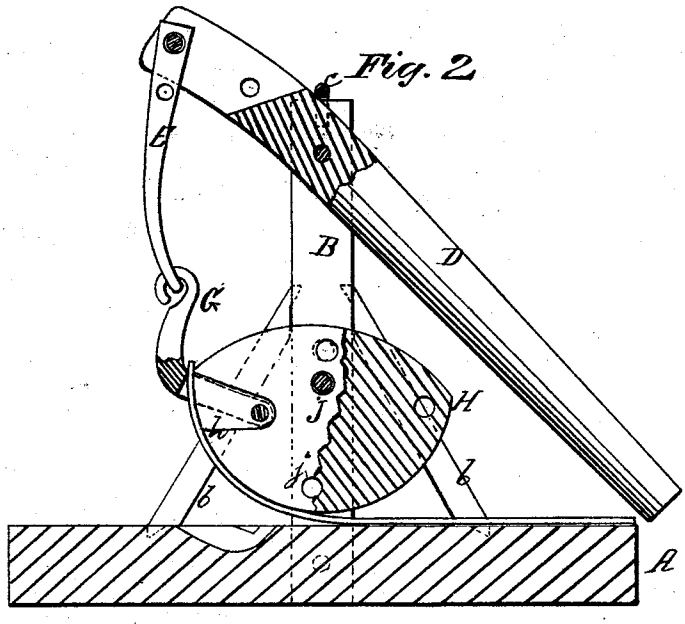

Witnesses.
W. K. DeHamel
Thomas Byrne

Inventor:
H. N. Amerman
W. E. Eveland
Per N. C. Abbot
attorney.

AM. PHOTO-LITHOGRAPHIC Co. N. Y. (OSBORNE'S PROCESS.)

UNITED STATES PATENT OFFICE.

HIRAM N. AMERMAN AND WESLEY E. EVELAND, OF FISHING CREEK, PA.

IMPROVEMENT IN TIRE-BENDING MACHINES.

Specification forming part of Letters Patent No. **151,739**, dated June 9, 1874; application filed November 25, 1873.

To all whom it may concern:

Be it known that we, HIRAM N. AMERMAN and WESLEY E. EVELAND, of Fishing Creek, county of Columbia and State of Pennsylvania, have invented certain new and useful Improvements in Tire-Bending Machines, of which the following is a specification:

Our invention relates to certain improvements in machines for bending tires, whereby the same machine may be used for tires of different sizes; and it consists in the combination of a former having two faces of different curves, a clevis, connecting-rod, and lever, arranged and operating as hereinafter particularly described and set forth.

In the accompanying drawing, Figure 1 is a longitudinal vertical section of our improved tire-bending machine, with the lever raised. Fig. 2 is a similar view of the same, with the lever depressed.

A represents a base or sill, from which extend upward two standards, B, which are strengthened by diagonal braces *b*. The upper ends of the standards are connected by a bar, *c*. Between the standards, near the upper ends, is pivoted a lever, D, to the short arm of which is attached one end of a rod, E, whose lower end connects with a clevis, G, which is pivoted to the former H in such a manner as to allow it to oscillate on its center, the clevis being forked, and each arm of said fork working in a depression in the former between two shoulders, *h h*, which shoulders limit the play of the clevis. The former H consists of a block, whose perimeter describes two arcs of circles of different sizes, opposite to each other. The former is pivoted between the standards B, so as to have a reciprocating rotary motion therein, with one of its curved faces near the sill A. The pin J which forms the pivot of the former may be inserted in holes made at different points in the former and the standards, so as to vary the diameters of the circles of which the perimeter of the former H forms arcs.

The parts being in the position shown in Fig. 1, the bar of iron which is to form the tire for one of the front wheels of a vehicle is passed under the former and through the clevis. The long arm of the lever is then depressed, raising the outer end of the clevis and causing the clevis to clamp the bar between it and the face of the former, and at the same time to draw it along on the sill and bend it around the former until the lever reaches the limit of its play and the parts are in the position shown in Fig. 2. The long arm of the lever is then raised, when the clevis drops to its former position, clamping the bar at a new point, and when the lever is depressed the bar is drawn along and bent around the former, as before. The motions are repeated until the entire bar has been bent to the required form, the bar passing around the former and under the lever until the ends meet and a complete circle is formed. The clevis-pivot is then removed, the bolt J withdrawn, and the former and bar taken out, and the former and clevis replaced for another operation.

To bend tires for the hind wheels the pin which pivots the clevis to the former H is removed, releasing the clevis therefrom. The pin J pivoting the former to the standards is then removed and the former inverted so as to bring the curved face of the larger diameter downward, and the former pivoted by the pin J being passed through the hole *j*. The clevis then pivoted to the former again, but at the opposite end, which is now on the same side of the machine as the clevis. The tire is then bent in the same manner as above described.

The lever and connecting-rod have holes at different points, whereby the play of the lever and the length of the short arm may be varied at pleasure.

What we claim as new, and desire to secure by Letters Patent, is—

In combination with the former H, the clevis G, connecting-rod E, and lever D, arranged and operating substantially as shown and described.

In testimony that we claim the foregoing as our invention, we hereunto affix our signatures this 19th day of November, 1873.

H. N. AMERMAN.
WESLEY E. EVELAND.

Witnesses;
DAVID COLEMAN,
THEODORE P. SWAYZE.