April 11, 1961 MASAO KATO 2,978,836

MOVABLE TOYS PROVIDED WITH PHONOGRAPH

Filed Jan. 7, 1959 2 Sheets-Sheet 1

FIG. 1

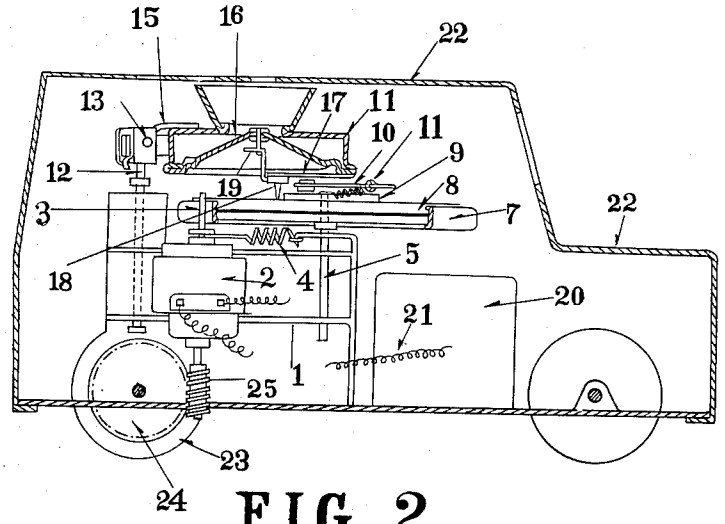

FIG. 2

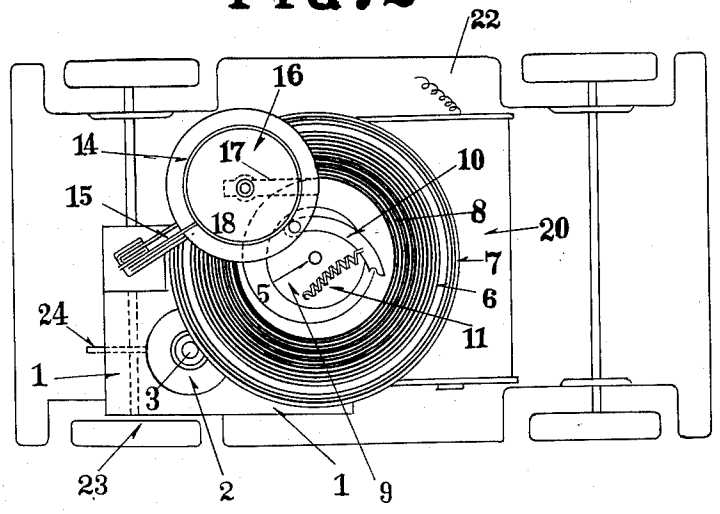

INVENTOR

MASAO KATO

BY Linton and Linton

ATTORNEYS

April 11, 1961 MASAO KATO 2,978,836

MOVABLE TOYS PROVIDED WITH PHONOGRAPH

Filed Jan. 7, 1959 2 Sheets-Sheet 2

FIG. 3

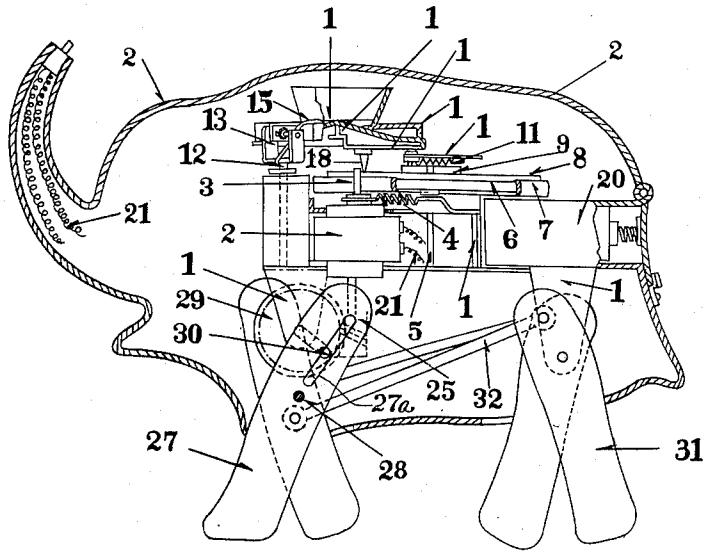

FIG. 4

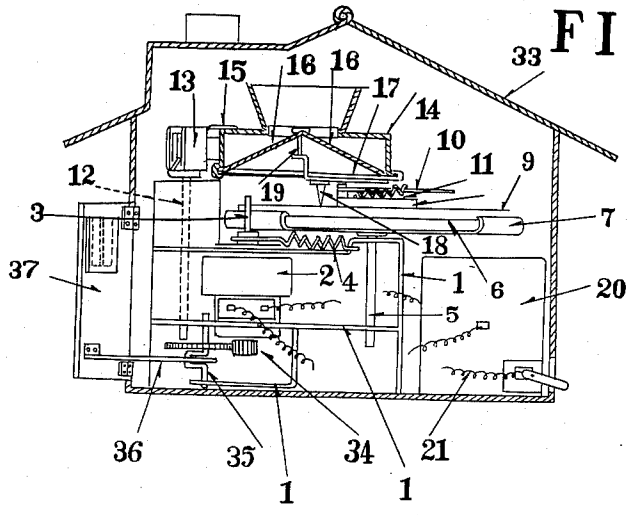

INVENTOR

MASAO KATO

BY Linton and Linton

ATTORNEYS

United States Patent Office 2,978,836
Patented Apr. 11, 1961

2,978,836

MOVABLE TOYS PROVIDED WITH PHONOGRAPH

Masao Kato, 5 Azumabashi Sanchome Sumida-ku, Tokyo, Japan

Filed Jan. 7, 1959, Ser. No. 785,518

1 Claim. (Cl. 46—232)

The present invention relates to movable toys provided with a phonograph.

The main object of this invention is to operate a phonograph to produce the best harmonised sound uniquely synchronising with the proper motion of the movable toys of various kinds such as running toys or the walking toys as well as all kinds of toys, the main body of which is always stationary but parts of which have verious kinds of motions.

A further important object of this invention is to provide positive operation, wide range of application, simple and economical construction to sound producing toys.

The accompanying drawings show the principle of this invention and the practical examples thereof. Figure 1 is a side sectional view of a running toy provided with a phonograph according to this invention. Figure 2 is a plan view thereof. Figure 3 is a side sectional view of a walking toy according to the present invention. Figure 4 is a side sectional view of a stationary toy according to this invention.

(A) In the modification of Figures 1 and 2, frame **1** has motor **2** mounted thereon and is mounted on the toy vehicle body **22**. A shaft **5** has a freely rotatable plate **6** mounted at one end thereof and is mounted for free rotation on said frame **1**. The upper end of the motor shaft **3** is pressed against the friction band **7** made of rubber and the like and formed on the peripheral wall of said rotatable plate **6** by being pulled toward the central part of the rotatable plate **6** by the tension spring **4**. A shaft **12** having an attachment member **13** fixed at one end thereof, is mounted for free rotation to the frame **1**. A sound box **14** having a form suitable for magnifying sound is pivotally connected to member **13**. A sound needle **18** is connected to the sound box **14** and is capable of being brought into contact with said sound plate **8**.

A worm gear **25** is connected at the other end of the motor shaft **3** and engages with the worm wheel **24** of the shaft fixed to the car wheel **23** for driving the toy over a surface.

Numeral **9** refers to the base plate to which a curved forked end lever **10** and a spring **11** are fixed at the center of the sound plate **8**.

15 indicates a spring, one end of which is connected to the attaching member **13** and the other end is pressed against the sound box **14** whereby the sound needle **18** is brought into contact with the sound plate **8** at all times. A vibration plate **16** is made of oil paper which is strong and has good vibration character, is connected to said sound box. An elastic band **17** having good vibration character is connected to said plate **16** and said needle **18**. Sound needle **18** vibrates the elastic band **17**, and this vibration is transmitted to the vibration plate **16** where it is magnified in the sound box **14**. A connecting rod **19** supports needle **18** from plate **16**. Battery **20** is connected to motor **2** by wires **21** for supplying electrical current thereto.

In the above embodiment, the motor shaft **3** being

rotated by the motor **2** rotates the rotatable plate **6**, the sound plate **8**, the worm **25**, and the wheel **23** propelling the toy.

When the sound needle **18** travels completely across plate **8** and comes to the end thereof, it engages with the forked part at the end of the lever **10**, whereupon the backing lever **10** is rotated against the spring **11** following the rotation of the rotatable plate **6** returning the sound needle **18** back to its original position and is released whereupon lever **10** returns to the position as shown in Figure 2 by the action of the spring **11**. Thus in this case, the drag force of the spring **11** is previously adjusted in such a way that it may be stopped in the state as shown in Figure 2.

(B) Figure 3 shows a second embodiment in which the phonograph shown in Figure 1 is applied to a walking toy **26** and therefore the corresponding parts are explained by referring to Figure 1. The worm gear **25** connected to the other end of the motor shaft **3** meshes with the worm wheel **29** fixed to a crank shaft **30** an end of which is slideably positioned in slot **27***a* of leg **27** pivotally connected to body **2** by pin **28**. Following the rotation of this crank shaft **30**, the fore leg **27** continues to pivot at the fulcrum point of pin **28** as its supporting point. Through the connect rod **32** the walking motion is transmitted to the rear legs **31** which cooperate with the front legs **27**, thus a good walking operation can be carried out. That is to say, in the second example, the toy body is so constructed that it can generate sound while walking following the rotation of the motor **2**.

(C) The third embodiment shown in Figure 4 is an ornament toy provided with the phonograph apparatus as shown in Figure 1, so that the explanation of the corresponding parts as above described apply thereto.

The motor driven gear **34** is meshed with the gear fixed to the crank shaft **35** and the opening and closing lever **36** is connected to the door **37**, which is hinged in such a way that it con be freely opened or closed, and the crank shaft **35**. The door **37** can be opened or closed by rotating the crank shaft **35**. Namely, the third embodiment is so constructed that the door **37** can be opened or closed by rotation of the motor **2** generating the sound at the same time.

(D) The phonograph in the example shown in Figure 1 can be applied to movable toys having a mouth capable of being opened and closed, for example dolls, animals or birds and the toys can utter sounds simulating their voices while they open or close their mouths.

(E) In the Example A, the backing apparatus of the sound needle **18** being arranged on the sound plate **8** by the backing lever **10** and the spring **11**, said backing apparatus may be arranged at the central part of the rotatable plate **6** and a hole may be drilled in the center of the sound plate **8**, thus the backing apparatus may be protruded above the surface of the sound plate **8**. In this case, sound plate **8** is suitably meshed with the rotatable plate **6** so as not to allow it to rotate idly. In the fifth example, the backing apparatus is not needed on the sound plate **8**.

(F) In each example stated above, by reason of the connection of the battery in order to rotate the sound plate **8** in the same direction at all times in case of reversing of the motor **2**, engagement of each gear is adjusted for carrying out this invention. Namely, in case of the present sixth example, the motor shaft **3** is not pressed directly against the peripheral wall of the rotatable plate **6**, and a few gears may be meshed with other gears on translation by the reversed rotation of the motor shaft **3**.

(G) In the example stated above, motion of the movable toys is carried out intermittently, while the generation of sound is carried out intermittently, and the motion

and the generation of sound of the toys can be carried out in synchronization for carrying out this invention.

What I claim is:

A toy having moving elements and sound producing means synchronized therewith comprising a toy body, an electric motor carried by said body, means for supplying electrical current to said motor, a sound plate rotatably supported on said body, a shaft driven by said motor engaging the periphery of said sound plate for rotating the same, a sound box pivotally supported on said body, a vibration plate connected to said sound box, a needle, a support connecting said needle to said vibration plate, an elastic band connected to said needle and said vibration plate, a base plate mounted on said sound plate, a curved forked end lever pivotally connected to said base plate and positioned for being engaged by said needle while contacting said sound plate for moving said needle to its starting position on said sound plate, a spring connecting said lever to said base plate tending to retain said lever in position for being engaged by said needle, elements connected to said body and means operable by said motor in synchronization with said shaft for operating said moving elements.

References Cited in the file of this patent

UNITED STATES PATENTS

1,138,478	Hirsch	May 4, 1915
1,512,283	Fritsche	Oct. 21, 1924
1,542,542	Echevarria	June 16, 1925
2,695,472	Ardolino	Nov. 30, 1954