March 18, 1969 H. A. POPPITZ 3,433,417

PORTABLE CLEANING APPARATUS

Filed Feb. 23, 1967 Sheet 1 of 2

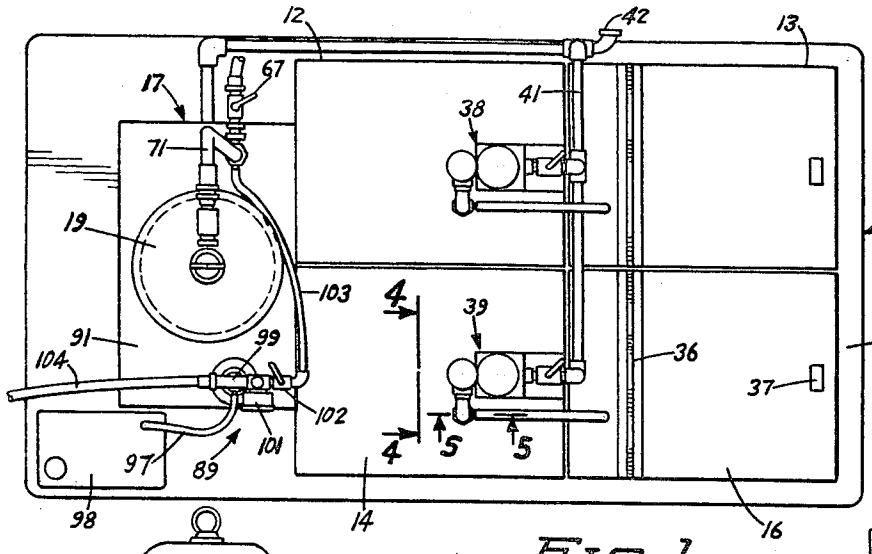

FIG. 1

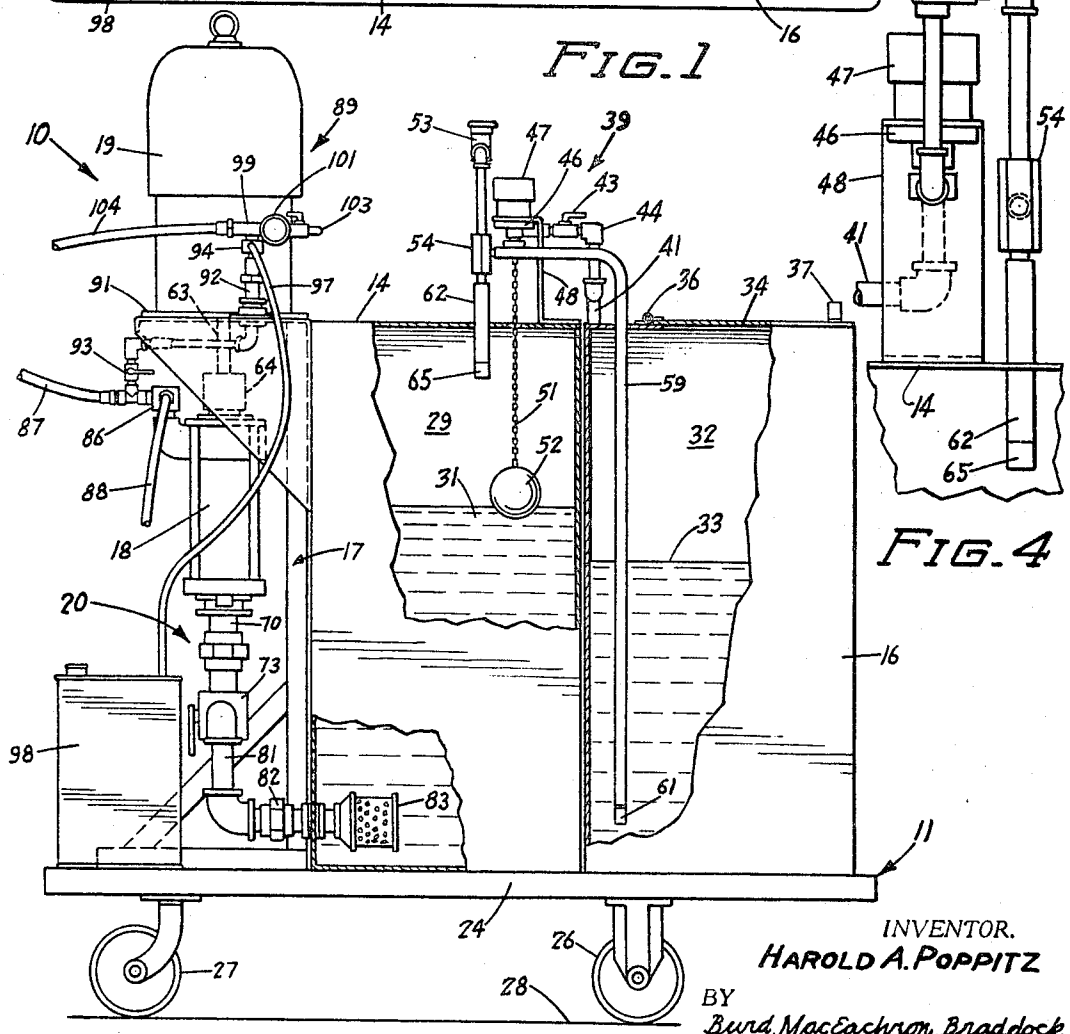

FIG. 2

FIG. 4

INVENTOR.
HAROLD A. POPPITZ
BY
Burd, MacEachron, Braddock, Barty & Schwartz
ATTORNEYS

March 18, 1969 H. A. POPPITZ 3,433,417

PORTABLE CLEANING APPARATUS

Filed Feb. 23, 1967 Sheet 2 of 2

FIG. 3

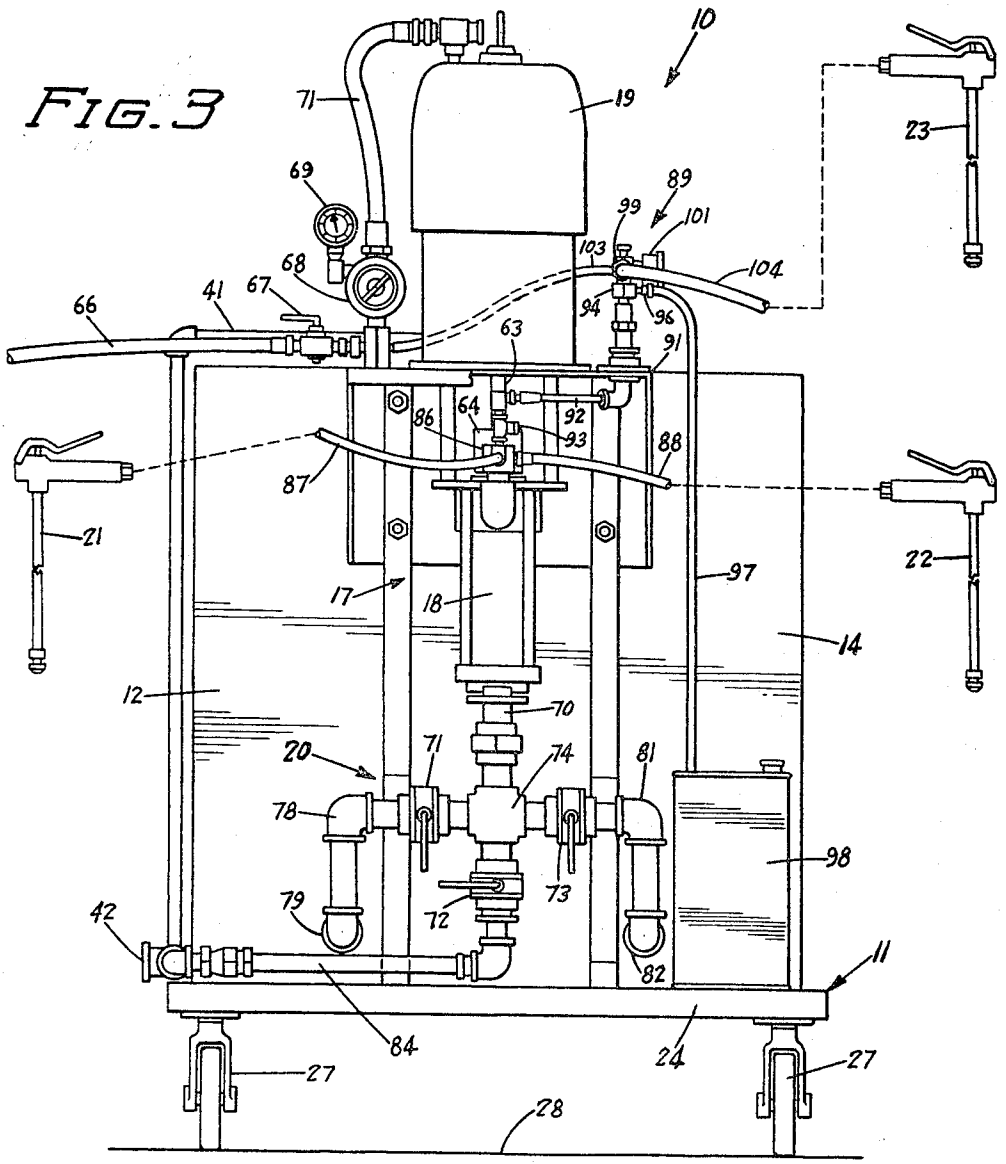

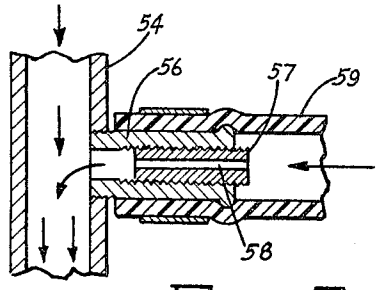

FIG. 5

INVENTOR.
HAROLD A. POPPITZ

BY
Burd, MacEachron, Braddock, Barty & Schwartz
ATTORNEYS

United States Patent Office 3,433,417
Patented Mar. 18, 1969

3,433,417

PORTABLE CLEANING APPARATUS

Harold A. Poppitz, Chaska, Minn., assignor to Chaska Chemical Company, Inc., Minneapolis, Minn., a corporation of Minnesota

Filed Feb. 23, 1967, Ser. No. 617,996
U.S. Cl. 239—304 10 Claims
Int. Cl. B05b 7/26, 7/16

ABSTRACT OF THE DISCLOSURE

A portable liquid cleaning apparatus comprising two pairs of tanks mounted on a truck carrying an air operated motor and a reciprocating piston pump. One pair of tanks used to store an acid cleaning liquid solution has a first tank storing a concentrate acid solution and a second tank storing a diluted acid solution connected to the inlet of the pump. The other pair of tanks stores alkaline cleaning liquid solutions with one tank storing a concentrated alkaline liquid and the other tank storing a diluted alkaline solution connected to the inlet of the pump. Separate liquid filling and proportioning units are used to mix the concentrate solutions and to maintain the levels of the liquids in the second or pump reservoir tanks so that a supply of cleaning liquid is always available to the pump.

A valving system connected to the inlet of the pump is used to selectively connect the pump to a source of alkaline cleaning liquid, acid cleaning liquid, or water from a source of supply. On operation of the motor, the pump discharges one or more of the cleaning liquids at high pressures through hoses connected to manually operated nozzles. A foaming unit operated with air pressure and liquid discharged by the pump is used to impart a foaming agent to the cleaning fluid whereby the cleaning fluid is discharged as a foam which clings to surfaces being cleaned.

This invention relates to a self-contained portable liquid cleaning apparatus for selectively discharging cleaning liquids under high pressures onto surfaces to be cleaned. The apparatus includes a pair of liquid storing tanks mounted on a movable truck. A concentrated cleaning liquid is stored in the first tank and a mixed cleaning liquid is stored in the second tank. A liquid filling and proportioning unit is used to mix the concentrated liquid with a second liquid, as water, and discharges the mixed liquids as a cleaning liquid into the second tank. The filling unit also automatically maintains a supply of cleaning liquid in the second tank. A motor operated pump supported on the truck adjacent the tanks withdraws the mixed cleaning liquid from the second tank and discharges this liquid under pressure to a hose and nozzle for discharge to a cleaning location.

To add versatility to the cleaning apparatus, a foaming unit is mounted on the truck and connected to the liquid system. The foaming unit operates with a source of air under pressure and the pressure of the cleaning fluid discharged by the pump to mix the cleaning fluid with air and a foaming agent. The mixed cleaning fluid, air and foaming agent is discharged to a separate hose and nozzle for delivery to a cleaning surface as a heavy foam which clings to the cleaning surface.

In the drawings.

FIGURE 1 is a plan view of the portable cleaning apparatus of this invention;

FIGURE 2 is a side elevational view partly in section of the cleaning apparatus of FIGURE 1;

FIGURE 3 is an enlarged end elevational view of the cleaning apparatus of FIGURE 1;

FIGURE 4 is an enlarged sectional view taken along the line 4—4 of FIGURE 1; and

FIGURE 5 is an enlarged sectional view taken along the line 5—5 of FIGURE 1.

Referring to the drawings there is shown in FIGURES 1 and 2 the liquid cleaning apparatus of this invention indicated generally at **10** for discharging cleaning liquids under high pressure to a cleaning location, as a wall, floors, containers, machinery and the like. The apparatus has a movable truck **11** carrying a first pair of liquid storing tanks **12** and **13** and a second pair of liquid storing tanks **14** and **16**. An upright frame **17** secured to the truck adjacent the tanks carries a pump **18** and a motor **19** drivably connected to the pump.

As shown in FIGURES 2 and 3, a valve assembly indicated generally at **20** couples the inlet of pump **18** to the bottom of tanks **12** and **14**. On operation of pump **18** by motor **19**, liquid is withdrawn from either one or both of the tanks **12** and **14** and discharged from the pump to either nozzle **21** or nozzle **22** or a foaming nozzle **23** according to the requirements of the cleaning operation. Valve assembly **20** is operable to connect the inlet of pump **18** to either pump reservoir tanks **12** or **14** or to a direct supply of a liquid, as water. Tanks **12** and **14** may contain acid or alkaline cleaning liquids as required by the cleaning operation. Preferably one tank stores an acid cleaning liquid while the other tank stores an alkaline cleaning liquid.

Returning to FIGURES 1 and 2, truck **11** has a flat rectangular platform **24** mounted on a pair of rear wheels **26** and a pair of front caster wheels **27** whereby the entire cleaning apparatus is supported for movement on surface **28**. This enables the cleaning apparatus to be readily moved from one cleaning location to another cleaning location without disassembling the apparatus. Truck **11** may be provided with side and end rails and with coupling or towing structure (not shown) as needed.

The first and second pairs of tanks **12**, **13** and **14**, **16** are substantially identical in size and shape. Each tank is separately secured to platform **24** and may be separately removed for cleaning, repair or replacement as required. One of the tanks of each pair identified as a first tank is used to store a concentrated cleaning liquid while the other tank or second tank is a pump reservoir storing a diluted or mixed cleaning liquid. The following description is limited to tanks **14** and **16**. As shown in FIGURE 2, tank **14** has a chamber **29** storing mixed or diluted cleaning liquid **31**. Tank **16** has a chamber **32** storing a concentrated cleaning liquid **33**. To reduce harmful effects, as corrosion, of the concentrated liquid on the tank, the inside of tank **16** may be coated with an epoxy coating. Tank **16** has a top or lid **34** pivotally attached to the top of tank **16** by hinge **36**. Lid **34** has an upright handle **37** whereby tank **16** can be opened for refilling and cleaning purposes. Both tanks **14** and **16** are provided with drains (not shown).

A liquid fill and proportioning unit indicated generally at **38** is used to withdraw concentrated liquid from tank **13** to mix this liquid with a second liquid, as water, and to discharge the mixed liquids into tank **12**. An identical liquid fill and proportioning unit **39** is used to discharge these fluids into tank **14**. Units **38** and **39** are connected to a common liquid supply pipe **41** which has an inlet coupling **42** used to connect the pipe to a supply of liquid under pressure. This supply of liquid is usually water.

Units **38** and **39** are identical in structure and function and are used with the separate pairs of tanks to maintain the levels of the liquids in the respective pump reservoir tanks **12** and **14**. These units also mix the concentrate liquid with the water to evenly dilute the water with concentrate liquid.

The following description is limited to the unit **39**. As shown in FIGURE 2, unit **39** has a manual shut-off valve **43** connected to liquid supply pipe **41** with an elbow and pipe **44**. Valve **43** is used to manually turn off the automatic fill and proportioning unit to facilitate a change in the metering screw **57**, a change in chemical cleaning liquid or drain the tanks for cleaning. An on-off valve **46** coupled to the outlet side of valve **43** is operated by a magnetic operator **47**. A Z-shaped bracket **48** supports valve **46** and operator **47** on tank **14**. Operator **47** has a movable member and spring (not shown) connected to valve **46**. A flexible link **51**, as a chain, connects the movable member of operator **47** to a weighted float ball **52** located in chamber **29** whereby the position of the ball moves up and down with the level of the liquid in chamber **29** and actuates operator **47**. When the level of the liquid in chamber **29** falls below a predetermined level, the weight of the ball actuates operator **47** which in turn opens valve **46**. With valve **46** open, liquid flows through a siphon breaker **53** into a pipe leading to a venturi suction pump coupling or eductor **54**. The liquid being under pressure from the source of supply flows through eductor **54** into a downwardly directed pipe **62** which discharges the liquid into tank **14**. A liquid diffuser **65** is attached to the lower end of pipe **62**.

Eductor **54**, as shown in FIGURE 5, has a lateral tubular stub **56** carrying a removable metering screw or tip **57**. A small longitudinal passage or hole **58** in tip **57** opens into the main passage of eductor **54**. A wide range of accurate water to concentrate liquid ratios are available by changing the size of passage **58**. The larger the hole, the greater the controlled concentration. In this adjustment of the mixing ratio, screw **57** is replaced with a screw having the desired size hole.

A hose **59** having an upper end telescoped over stub **56** extends downwardly into tank **16**. The lower end of hose **59** is connected to a foot valve **61** operative to prevent reverse flow of liquid in hose **59**. Hose **59** being telescoped over stub **56** makes screw **58** unaccessible to the cleaning operator so that the screw can not be readily adjusted. In addition, hose **59** protects screw **58** against accidental damage.

As shown in FIGURE 3, motor **19** mounted on top of a horizontal plate portion **91** of frame **17** has a downwardly projected movable piston rod **63** connected to a movable portion **64** of pump **18**. Motor **19** may be any type of motor, as electric, hydraulic, air operated or the like, capable of operating pump **18**. Pump **18** may be any pump capable of delivering liquid under high pressure. For example, the motor may be an air motor having a reciprocating piston double acting valve structure and the pump may be a double acting piston pump. The motor and pump may be a single unit as the Bulldog air-operated pump, model 206, manufactured by the Gray Company, Inc., Minneapolis, Minn. The following description is directed to an air-operated motor and a reciprocating pump. Air under pressure is delivered through an air supply hose **66** coupled to a shut-off valve **67** which directs the air to an air pressure regulator **68** having a gauge **69**. Regulator **68** is adjustable to regulate the speed of motor **19**. An air hose **71** connected to regulator **68** carries the air to inlet of motor **19**. The pump **18** operated by motor **19** has a delivery which is continuous with equal pressure and volume on both strokes.

Valve assembly **20** connected to inlet pipe **70** of pump **18** operates to selectively restrict or mix the liquids which are drawn into the pump. Valve assembly **20** has three manual on-off valves **71**, **72** and **73** connected to a common coupling **74** attached to the inlet pipe **70**. Valve **71** is connected to the bottom of tank **12** with a pipe and elbow structure **78** which leads to tank exit **79**. A similiar pipe and elbow structure **81** connects valve **73** with tank exit **82** of tank **14**.

As shown in FIGURE 2, strainer **83** located in the bottom of tank **14** is connected to the inlet of tank exit structure **82**. A similar strainer (not shown) is employed with the tank inlet **79** of tank **12**. Valve **72** is connected by a pipe **84** to inlet coupling **42** for the supply of water. Valves **71**, **72** and **73** can be independently turned on and off to connect the pump with either reservoir tank **12** or **14** or with the supply of water.

As shown in FIGURES 2 and 3, a discharge coupling **86** connected to the outlet of pump **18** is used to connect a pair of hoses **87** and **88** with the pump. The opposite or outer ends of hoses **87** and **88** are coupled to nozzles **21** and **22** respectively. With motor **19** operating and pump **18** fluidly connected to one of the tanks or supply of water either or both nozzles **21** and **22** can be used to direct cleaning fluid onto an object or place to be cleaned.

Referring to FIGURE 3, a foaming unit indicated generally at **89** is mounted on platform **91** forming a flat top of frame **17**. Foaming unit **89** is connected to the outlet discharge coupling **86** of pump **18** by piping **92** and an on-off valve **93**. Foaming unit **89** comprises a first venturi coupling or eductor **94** connected to the upright end of piping **92** so that the liquid discharged by the pump passes through the venturi passage of the coupling. Projected from the side of the coupling **94** is a connector or tubular stub **96** receiving a hose **97** extended downwardly into a container or reservoir **98** for the foaming agent. Connector **96** has a passage leading into the venturi passage and may be provided with adjustable structure, as a needle, to vary the size of the passage whereby the amount of foaming agent which is mixed with the liquid flowing through the coupling may be regulated.

Secured to the upper or discharge end of coupling **94** is a second air venturi coupling or eductor **99** positioned in a transverse direction with respect to the flow of liquid through the first venturi coupling **94**. A pressure regulator **101** and on-off valve **102** connect coupling **99** to an air hose **103**. The inlet end of hose **103** is connected to the air line for motor **19** downstream of shut-off valve **67**. An elongated hose **104** receives the air mixed with liquid and foaming agent from the air venturi coupling **99** and carries this mixture to foaming nozzle **23**. By adjusting the valve assembly **20**, the foaming agent may be mixed with an alkaline cleaning liquid, an acid cleaning liquid, water or a combination of these liquids.

In use, the cleaning apparatus **10** is self-contained portable liquid discharging machine capable of discharging a plurality of cleaning fluids under high pressure. Tanks **13** and **16** are provided with a supply of concentrated cleaning liquids and the container **98** is provided with an appropriate foaming agent. The apparatus is then moved to the location to be cleaned without transporting large amounts of liquids.

In the cleaning operation, inlet coupling **42** is connected to a supply of water whereby the liquid fill and proportioning units **38** and **39** function to discharge cleaning solutions into reservoir tanks **12** and **14**. With the tanks **12** and **14** empty, the magnetic operators **47** are actuated by the weighted float balls to open valves **46** allowing liquid to flow through venturi suction pumps **54**. The flowing liquids create suction forces which draw the concentrate cleaning liquids through tubings **59** and mixes them with the water. This mixture of liquids is discharged into the tanks through the pipes **62**. When the level of the liquids in the tanks **12** and **14** are in their filled positions, operator **47** turns valves **46** off providing the pump reservoirs with uniformly mixed cleaning fluids. Units **38** and **39** operate automatically to maintain liquids in the tanks **12** and **14**.

Valve assembly **20** is adjusted to provide the desired cleaning liquid, either alkaline, acid or water. On operation of motor **19**, pump **18** functions to withdraw liquid from one of tanks **12** or **14** and discharge the liquid to discharge coupling **86** into hoses **87** and **88**. Nozzles **21** and **22** may

be selectively or simultaneously operated to dispense the cleaning fluid onto a cleaning location.

In certain cleaning circumstances, it may be desirable to use a foamed cleaning solution. In this event, the air is supplied to foaming unit **89** and liquid discharged from pump **18** is supplied to unit **89**. As the liquid passes through eductor **94**, it mixes with a foaming agent. This liquid is mixed with air in eductor **99** which carries the air and liquid through holes **104** for discharge through separate foam nozzle **23**.

The embodiments of the invention in which an exclusive property or privilege is claimed are defined as follows:

1. An apparatus for discharging cleaning liquid comprising: first tank means for storing a concentrate liquid, second tank means for storing a mixture of liquids, transfer means for receiving a supply of a second liquid, withdrawing the concentrate liquid from the first tank means, continuously mixing the concentrate liquid with the second liquid between the first tank means and the second tank means and discharging the mixed liquids into the second tank means, said transfer means having automatic control means operable to maintain a supply of the mixed liquids in the second tank means, a pump for withdrawing mixed liquids from the second tank means, and nozzle and hose means connected to the pump for receiving the mixed liquid under pressure and discharging the mixed liquid to a cleaning location.

2. The apparatus of claim **1** including a platform and wheel means for movably supporting the platform, said first tank means, second tank means and pump supported on said platform.

3. The apparatus of claim **1** including a truck carrying the first tank, the second tank and pump, a motor supported on the truck for operating said pump.

4. The apparatus of claim **3** wherein the motor is an air operated motor mounted on a frame secured to the truck.

5. The apparatus of claim **1** wherein said transfer means includes an eductor having a passageway for the second liquid, a removable metering tip with a hole open to the passageway and a hose coupling the tip with the first tank means whereby the second liquid flowing through the passageway draws concentrate liquid into the second liquid.

6. The apparatus of claim **1** including a foaming unit connected to the pump for receiving liquid from the pump under pressure, a container for a supply of foaming agent, means for mixing a quantity of foaming agent to liquid flowing through the unit, means delivering air under pressure to the foaming unit to mix the air with the liquid and foaming agent, and nozzle and hose means coupled to the foaming unit for carrying the mixed air, liquid and foaming agent to a cleaning location.

7. The apparatus of claim **1** wherein said first tank means comprise a pair of first tanks storing separate concentrate liquids, said second tank means comprises a pair of second tanks for storing liquids, said transfer means comprise a first fill and proportioning unit and a second fill and proportioning unit for withdrawing concentrate liquids separately from each of the first tanks, mixing the concentrate liquids with water between the first tanks and second tanks, and discharging the mixed liquids separately into the second tanks, and a valve assembly for selectively connecting the pump to each of the second tanks.

8. The apparatus of claim **7** wherein said valve assembly has an on-off valve to connect the pump to a source of water.

9. The apparatus of claim **7** including a foaming unit connected to the pump for receiving liquid from the pump under pressure, a container for a supply of foaming agent, means for mixing a quantity of foaming agent to liquid flowing through the unit, means delivering air under pressure to the foaming unit to mix the air with the liquid and foaming agent, and nozzle and hose means coupled to the foaming unit for carrying the mixed air, liquid and foaming agent to a cleaning location.

10. The apparatus of claim **1** including means for introducing a foaming agent and air under pressure into liquid discharged by the pump.

References Cited

UNITED STATES PATENTS

2,988,286	6/1961	Snyder et al.	239—127
3,049,302	8/1962	Simmons	239—75
3,226,030	12/1965	Rossi	239—135
2,128,263	8/1938	Ofeldt	239—304
2,487,348	11/1949	Malsbary et al.	239—304
2,640,724	6/1953	Sanders et al.	239—304
2,919,070	12/1959	Arant	239—304
2,987,259	6/1961	Lindquist	239—304

FOREIGN PATENTS

425,497	9/1965	Switzerland.
142,033	9/1929	Switzerland.
821,564	10/1959	Great Britain.

EVERETT W. KIRBY, *Primary Examiner.*

US. Cl. X.R.

239—130, 142, 318

UNITED STATES PATENT OFFICE
CERTIFICATE OF CORRECTION

Patent No. 3,433,417 March 18, 1969

Harold A. Poppitz

It is certified that error appears in the above identified patent and that said Letters Patent are hereby corrected as shown below:

Column 6, line 41 insert:

2,039,275	4/1936	McGrael ------	239-318

Signed and sealed this 31st day of March 1970.

(SEAL)
Attest:

Edward M. Fletcher, Jr.
Attesting Officer

WILLIAM E. SCHUYLER, JR.
Commissioner of Patents